UPGRADE INNER CAMPGROUND UTILITIES
MISSOURI STATE FAIRGROUNDS
SEDALIA, MISSOURI

MEP ENGINEER:

Antella Consulting Engineers, Inc.
1600 Genessee, Suite 260
Kansas City, MO 64102

CIVIL ENGINEER:

SK Design Group, Inc.
4600 College Blvd, Suite 100
Overland Park, KS 66211

OWNER: STATE OF MISSOURI
MICHAEL L. PARSON,
GOVERNOR

DEPARTMENT OF
AGRICULTURE

PROJECT NUMBER: F1905-01

PROJECT MANAGEMENT: OFFICE OF ADMINISTRATION
DIVISION OF FACILITIES MANAGEMENT,
DESIGN AND CONSTRUCTION

SITE NUMBER: 1501
FACILITY NUMBER: 3511501142

SHEET NUMBER:

G-010

AUGUST 29, 2019

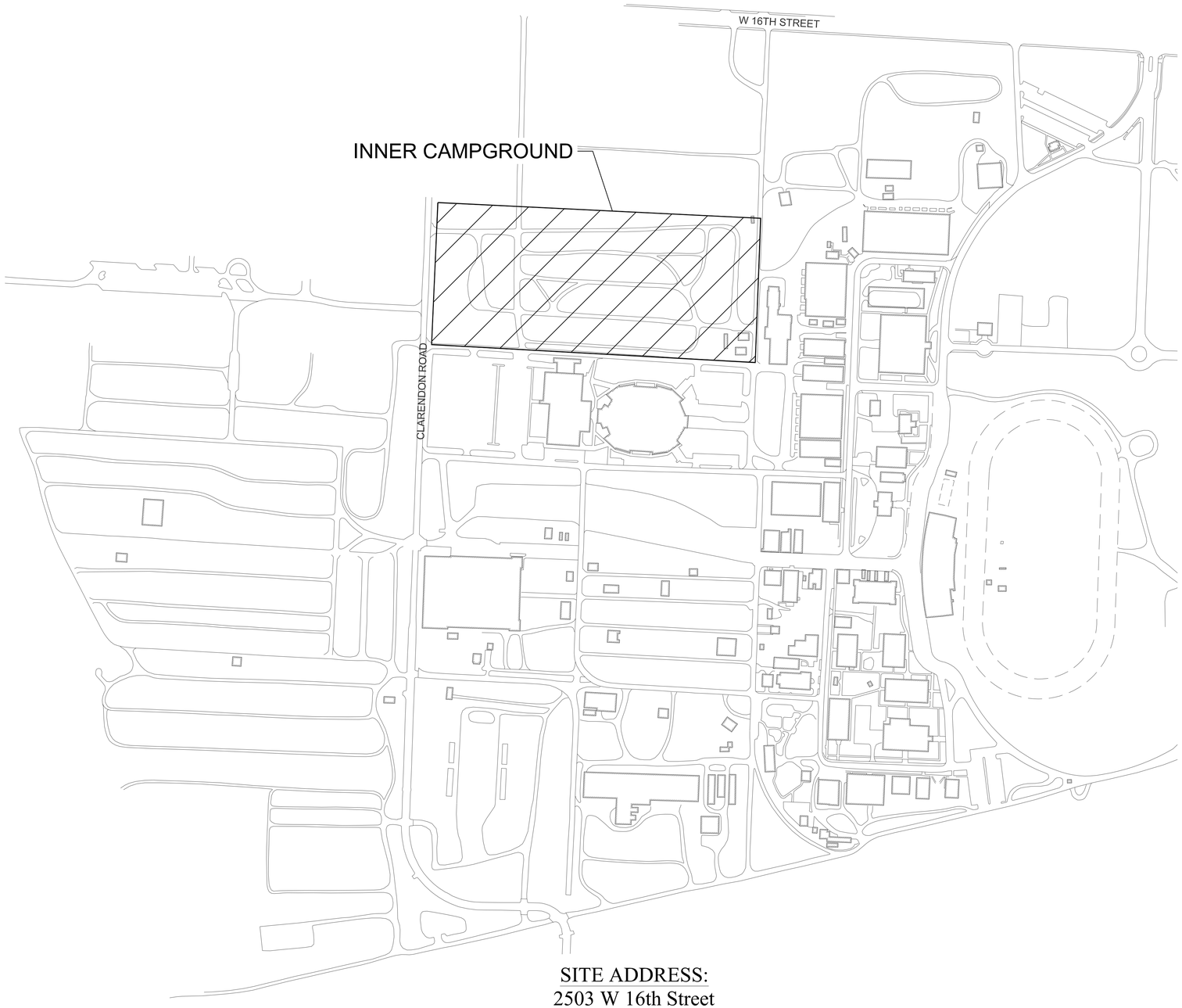

SITE ADDRESS:
2503 W 16th Street
Sedalia, MO 65301

NORTH

SCOPE OF WORK PLAN
NOT TO SCALE

PROJECT GENERAL NOTES:

IF CONTRACTOR ENCOUNTERS ROCK AS DEFINED BY SPECIFICATION SECTION 312000-1.2(L), NOTIFY ENGINEER AND OWNER'S REPRESENTATIVE. REMOVAL TO BE AT A NEGOTIATED PRICE BY CHANGE ORDER.

COORDINATE WITH OWNER PRIOR TO BACKFILLING UTILITY TRENCHES FOR POTENTIAL OWNER CABLING WORK.

SCOPE OF WORK SUMMARY:

BASE BID: DOMESTIC WATER AND ELECTRICAL WORK FOR INNER CAMPGROUND SITES 133-236 AND 301-346. SANITARY WORK FOR SITES 1-132.

ALTERNATE NO. 1: DOMESTIC WATER AND ELECTRICAL WORK FOR INNER CAMPGROUND SITES 85-132. INCLUDED IN THIS ALTERNATE ARE PROTECTIVE BOLLARDS.

ALTERNATE NO. 2: DOMESTIC WATER AND ELECTRICAL WORK FOR INNER CAMPGROUND SITES 1-84. INCLUDED IN THIS ALTERNATE ARE PROTECTIVE BOLLARDS.

ALTERNATE NO. 3: DOMESTIC WATER AND ELECTRICAL WORK FOR INNER CAMPGROUND, PURVEYOR LOT. INCLUDED IN THIS ALTERNATE ARE PROTECTIVE BOLLARDS.

CODE SUMMARY:

INTERNATIONAL BUILDING CODE 2018
INTERNATIONAL MECHANICAL CODE 2018
INTERNATIONAL PLUMBING CODE 2018
INTERNATIONAL FIRE CODE..... 2018

NFPA 70 NATIONAL ELECTRICAL CODE 2017

DRAWING INDEX:

G010	PROJECT COVER SHEET
G011	PROJECT SCOPE OF WORK PLAN

CIVIL:

C111	EXISTING CONDITIONS PLAN - INNER CAMPGROUND
DC211	SITE DEMOLITION PLAN - INNER CAMPGROUND
C311	SITE UTILITY PLAN - INNER CAMPGROUND
C411	SANITARY SEWER LAYOUT PLAN - INNER CAMPGROUND
C421	SANITARY SEWER PROFILE-1
C422	SANITARY SEWER PROFILE-2
C423	SANITARY SEWER PROFILE-3
C511	SITE DETAILS - 1
C512	SITE DETAILS - 2
C513	SITE DETAILS - 3

ELECTRICAL:

E011	ELECTRICAL SYMBOLS LEGEND & GENERAL NOTES
DE111	ELECTRICAL DEMOLITION PLAN - INNER
DE112	ELECTRICAL DEMOLITION ALTERNATE #1 & #3 PLAN-INNER
DE113	ELECTRICAL DEMOLITION ALTERNATE #2 PLAN-INNER
E111	ELECTRICAL SITE PLAN - INNER
E511	ELECTRICAL DETAILS
E512	ELECTRICAL DETAILS
E513	ELECTRICAL DETAILS
E611	ELECTRICAL PANEL SCHEDULES - INNER
E612	ELECTRICAL PANEL SCHEDULES - INNER
E613	ELECTRICAL PANEL SCHEDULES - INNER
E811	MEDIUM VOLTAGE ONE-LINE DIAGRAM - INNER
E812	TYPICAL 120/240V ELECTRICAL RISER & LUMINAIRE SCHEDULE

STATE OF MISSOURI
MICHAEL L. PARSON,
GOVERNOR

STATE OF MISSOURI
MONICA SANTOYO SANTOS
NUMBER E-2000174546
REGISTERED PROFESSIONAL ENGINEER
8/29/2019

Monica S Santos
MO# E-2000174546

MEP Engineer:

Antella
CONSULTING ENGINEERS, INC.

1600 Genessee, Suite 260
Kansas City, Missouri 64102
email: antella@antella-inc.com
Tele 816-421-0950
Fax 816-249-2439

License Name: Antella Consulting Engineers, Inc.
Profession Name: Professional Engineering Corporation
Licensee Number: E-2005013590

Civil Engineer:

SK Design Group, Inc.
Civil Engineers
4600 College Blvd., Suite 100
Overland Park, KS 66211
(913)-451-1818
fax (913)-451-7599
www.skdg.com

License Name: SK Design Group, Inc.
Profession Name: Professional Engineering Corporation
Licensee Number: E-1274-F

OFFICE OF ADMINISTRATION
DIVISION OF FACILITIES MANAGEMENT,
DESIGN AND CONSTRUCTION

DEPARTMENT OF AGRICULTURE

UPGRADE INNER CAMPGROUND UTILITIES

MISSOURI STATE FAIRGROUNDS
2503 W 16TH STREET
SEDALIA, MISSOURI 65301

PROJECT # F1905-01
SITE # 1501
FACILITY # 3511501142

REVISION:
DATE:
REVISION:
DATE:
REVISION:
DATE:
ISSUE DATE: 08/29/2019

CAD DWG FILE:
DRAWN BY: PSJ
CHECKED BY: MSS
DESIGNED BY: PSJ

SHEET TITLE:
PROJECT SCOPE OF WORK PLAN

SHEET NUMBER:
G011

SHEET 2 0F 25
08/29/2019

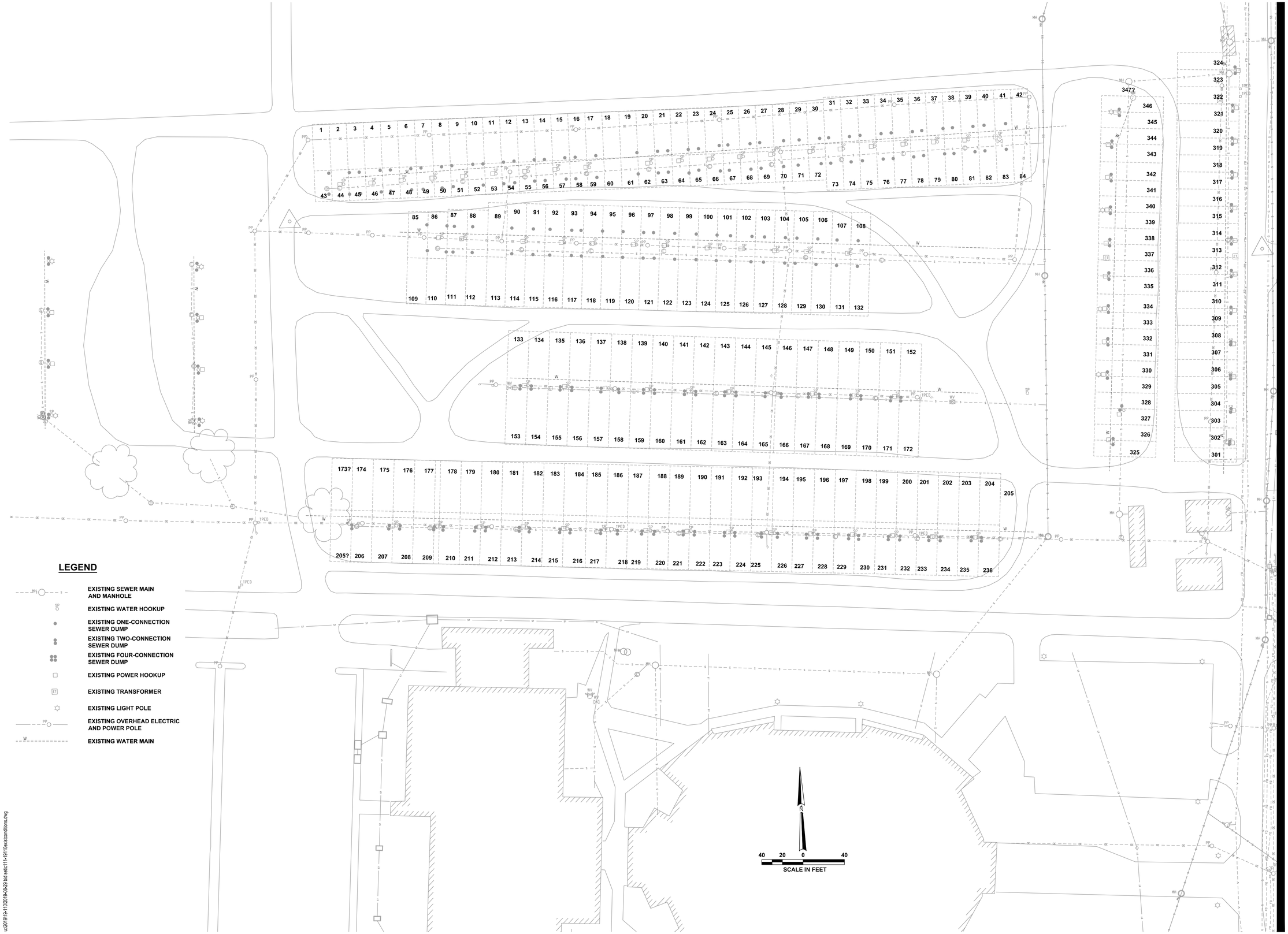

STATE OF MISSOURI
MICHAEL L. PARSON,
GOVERNOR

STATE OF MISSOURI
SASSAN MAHDIAN
NUMBER E-20961
REGISTERED PROFESSIONAL ENGINEER
8-29-19

MEP Engineer:

Antella
CONSULTING ENGINEERS INC.

1600 Genessee, Suite 260
Kansas City, Missouri 64102
email: antella@antella-inc.com
Tele 816-421-0950
Fax 816-249-2439

License Name: Antella Consulting Engineers, Inc.
Profession Name: Professional Engineering Corporation
Licensee Number: E-2005013590

Civil Engineer:

SK Design Group, Inc.

Civil Engineers
4600 College Blvd., Suite 100
Overland Park, KS 66211
(913)-451-1818
fax (913)-451-7599
www.skdg.com

License Name: SK Design Group, Inc.
Profession Name: Professional Engineering Corporation
Licensee Number: E-1274-F

OFFICE OF ADMINISTRATION
DIVISION OF FACILITIES MANAGEMENT,
DESIGN AND CONSTRUCTION

DEPARTMENT OF AGRICULTURE

UPGRADE INNER CAMPGROUND UTILITIES

MISSOURI STATE FAIRGROUNDS
2503 W 16TH STREET
SEDALIA, MISSOURI 65301

PROJECT # F1905-01
SITE # 1501
FACILITY # 3511501142

REVISION:
DATE:
REVISION:
DATE:
REVISION:
DATE:

ISSUE DATE: 08/29/2019

CAD DWG FILE:
DRAWN BY:
CHECKED BY:
DESIGNED BY:

SHEET TITLE:

EXISTING CONDITIONS PLAN - INNER CAMPGROUND

SHEET NUMBER:

C111

SHEET 3 OF 25
08/29/2019

u:\2019\19-110\2019-08-29 bid set\c111-19110existconditions.dwg

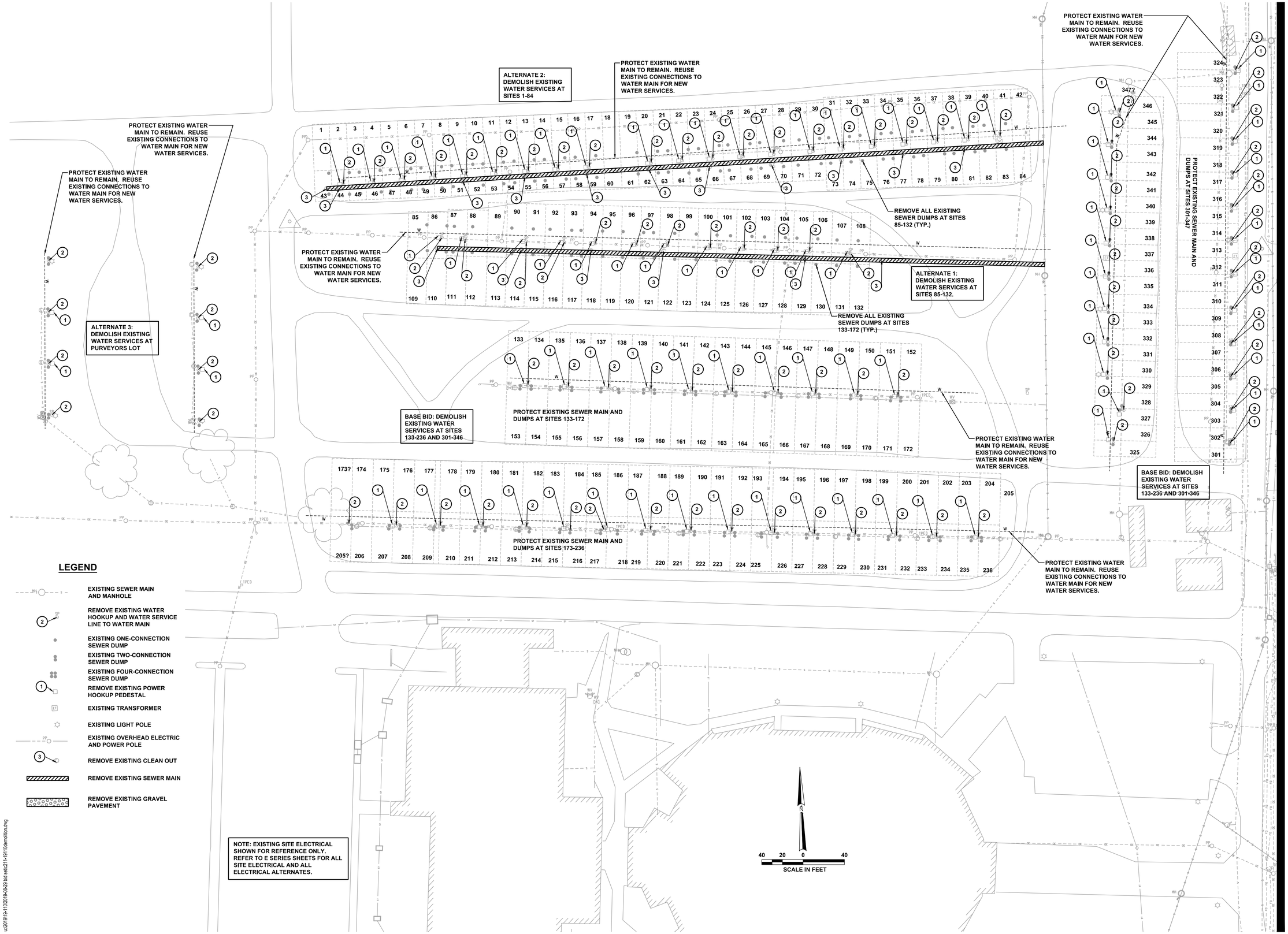

STATE OF MISSOURI
MICHAEL L. PARSON, GOVERNOR

STATE OF MISSOURI
SASSAN MAHDIAN
NUMBER E-20961
REGISTERED PROFESSIONAL ENGINEER
8-29-2019

MEP Engineer:

Antella
CONSULTING ENGINEERS, INC.

1600 Genessee, Suite 260
Kansas City, Missouri 64102
email: antella@antella-inc.com
Tele 816-421-0950
Fax 816-249-2439

License Name: Antella Consulting Engineers, Inc.
Profession Name: Professional Engineering Corporation
Licensee Number: E-2005013590

Civil Engineer:

SK Design Group, Inc.
Civil Engineers
4600 College Blvd., Suite 100
Overland Park, KS 66211
(913)-451-1818
fax (913)-451-7599
www.skdg.com

License Name: SK Design Group, Inc.
Profession Name: Professional Engineering Corporation
Licensee Number: E-1274-F

OFFICE OF ADMINISTRATION
DIVISION OF FACILITIES MANAGEMENT, DESIGN AND CONSTRUCTION

DEPARTMENT OF AGRICULTURE

UPGRADE WEST CAMPGROUND UTILITIES

MISSOURI STATE FAIRGROUNDS
2503 W 16TH STREET
SEDALIA, MISSOURI 65301

PROJECT # F1903-01
SITE # 1501
FACILITY # 3511501141

REVISION:
DATE:
REVISION:
DATE:
REVISION:
DATE:
ISSUE DATE: 08/29/2019

CAD DWG FILE:
DRAWN BY:
CHECKED BY:
DESIGNED BY:

SHEET TITLE:

SITE DEMOLITION PLAN - INNER CAMPGROUND

SHEET NUMBER:

DC211

SHEET 4 OF 25
08/29/2019

u:\2019\95-110\2019-08-29 bid set\c211-19110demolition.dwg

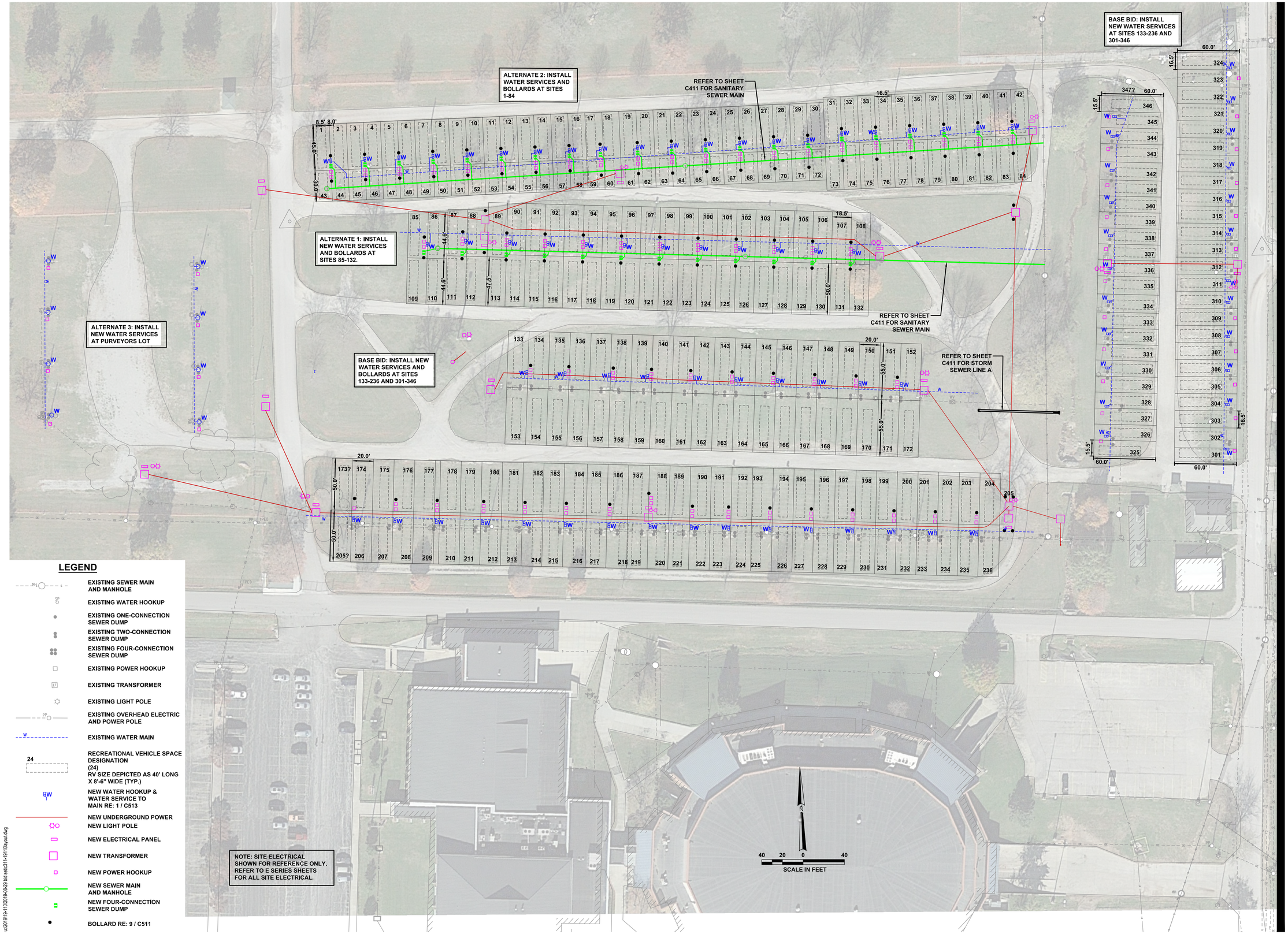

LEGEND

- EXISTING SEWER MAIN AND MANHOLE
- EXISTING WATER HOOKUP
- EXISTING ONE-CONNECTION SEWER DUMP
- EXISTING TWO-CONNECTION SEWER DUMP
- EXISTING FOUR-CONNECTION SEWER DUMP
- EXISTING POWER HOOKUP
- EXISTING TRANSFORMER
- EXISTING LIGHT POLE
- EXISTING OVERHEAD ELECTRIC AND POWER POLE
- EXISTING WATER MAIN
- RECREATIONAL VEHICLE SPACE DESIGNATION (24) RV SIZE DEPICTED AS 40' LONG X 8'-6" WIDE (TYP.)
- NEW WATER HOOKUP & WATER SERVICE TO MAIN RE: 1 / C513
- NEW UNDERGROUND POWER
- NEW LIGHT POLE
- NEW ELECTRICAL PANEL
- NEW TRANSFORMER
- NEW POWER HOOKUP
- NEW SEWER MAIN AND MANHOLE
- NEW FOUR-CONNECTION SEWER DUMP
- BOLLARD RE: 9 / C511

STATE OF MISSOURI
MICHAEL L. PARSON, GOVERNOR

STATE OF MISSOURI
SASSAN MAHDIAN
NUMBER E-20961
REGISTERED PROFESSIONAL ENGINEER
8-29-2019

MEP Engineer:

Antella
CONSULTING ENGINEERS, INC.

1600 Genessee, Suite 260
Kansas City, Missouri 64102
email: antella@antella-inc.com
Tele 816-421-0950
Fax 816-249-2439

License Name: Antella Consulting Engineers, Inc.
Profession Name: Professional Engineering Corporation
Licensee Number: E-2005013590

Civil Engineer:

SK Design Group, Inc.

Civil Engineers
4600 College Blvd., Suite 100
Overland Park, KS 66211
(913)-451-1818
fax (913)-451-7599
www.skdg.com

License Name: SK Design Group, Inc.
Profession Name: Professional Engineering Corporation
Licensee Number: E-1274-F

OFFICE OF ADMINISTRATION
DIVISION OF FACILITIES MANAGEMENT, DESIGN AND CONSTRUCTION

DEPARTMENT OF AGRICULTURE

UPGRADE WEST CAMPGROUND UTILITIES

MISSOURI STATE FAIRGROUNDS
2503 W 16TH STREET
SEDALIA, MISSOURI 65301

PROJECT # F1903-01
SITE # 1501
FACILITY # 3511501141

REVISION:
DATE:
REVISION:
DATE:
REVISION:
DATE:
ISSUE DATE: 08/29/2019

CAD DWG FILE:
DRAWN BY:
CHECKED BY:
DESIGNED BY:

SHEET TITLE:

SITE UTILITY PLAN - INNER CAMPGROUND

SHEET NUMBER:

C311

SHEET 5 OF 25
08/29/2019

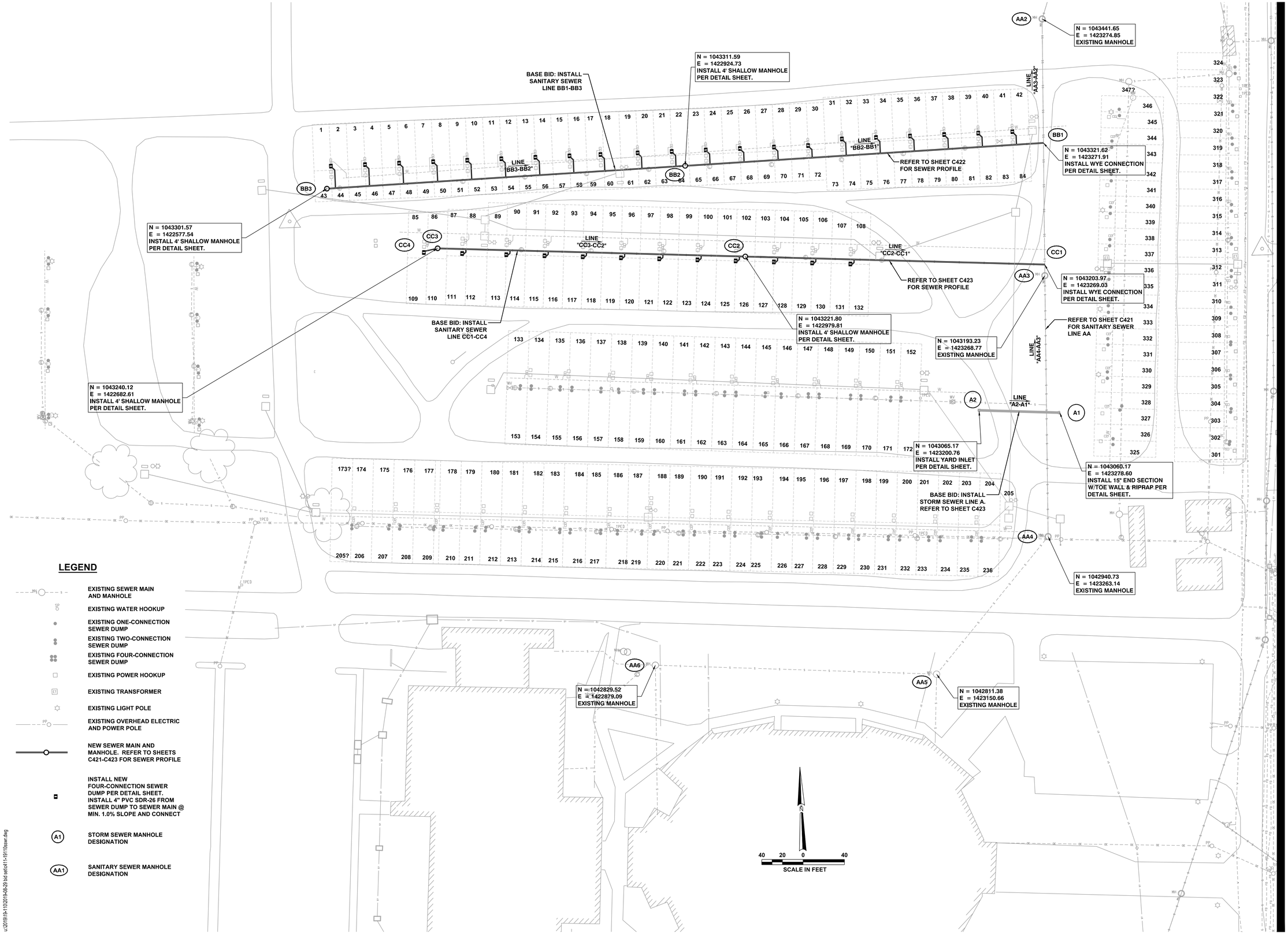

LEGEND

- EXISTING SEWER MAIN AND MANHOLE
- EXISTING WATER HOOKUP
- EXISTING ONE-CONNECTION SEWER DUMP
- EXISTING TWO-CONNECTION SEWER DUMP
- EXISTING FOUR-CONNECTION SEWER DUMP
- EXISTING POWER HOOKUP
- EXISTING TRANSFORMER
- EXISTING LIGHT POLE
- EXISTING OVERHEAD ELECTRIC AND POWER POLE
- NEW SEWER MAIN AND MANHOLE. REFER TO SHEETS C421-C423 FOR SEWER PROFILE
- INSTALL NEW FOUR-CONNECTION SEWER DUMP PER DETAIL SHEET. INSTALL 4" PVC SDR-26 FROM SEWER DUMP TO SEWER MAIN @ MIN. 1.0% SLOPE AND CONNECT
- A1 STORM SEWER MANHOLE DESIGNATION
- AA1 SANITARY SEWER MANHOLE DESIGNATION

STATE OF MISSOURI
MICHAEL L. PARSON,
GOVERNOR

STATE OF MISSOURI
SASSAN MAHDIAN
NUMBER E-20961
REGISTERED PROFESSIONAL ENGINEER
8-29-2019

MEP Engineer:

Antella
CONSULTING ENGINEERS INC.

1600 Genessee, Suite 260 Tele 816-421-0950
Kansas City, Missouri 64102 Fax 816-249-2439
email: antella@antella-inc.com

License Name: Antella Consulting Engineers, Inc.
Profession Name: Professional Engineering Corporation
Licensee Number: E-2005013590

Civil Engineer:

SK Design Group, Inc.
Civil Engineers
4600 College Blvd., Suite 100
Overland Park, KS 66211
(913)-451-1818
fax (913)-451-7599
www.skdg.com

License Name: SK Design Group, Inc.
Profession Name: Professional Engineering Corporation
Licensee Number: E-1274-F

OFFICE OF ADMINISTRATION
DIVISION OF FACILITIES MANAGEMENT,
DESIGN AND CONSTRUCTION

DEPARTMENT OF AGRICULTURE

UPGRADE WEST CAMPGROUND UTILITIES

MISSOURI STATE FAIRGROUNDS
2503 W 16TH STREET
SEDALIA, MISSOURI 65301

PROJECT # F1903-01
SITE # 1501
FACILITY # 3511501141

REVISION:
DATE:
REVISION:
DATE:
REVISION:
DATE:
ISSUE DATE: 08/29/2019

CAD DWG FILE:
DRAWN BY:
CHECKED BY:
DESIGNED BY:

SHEET TITLE:

SANITARY SEWER LAYOUT PLAN - INNER CAMPGROUND

SHEET NUMBER:

C411

SHEET 6 OF 25
08/29/2019

u:\2019\19-110\2019-08-29\dwg\set\c411-19110sewr.dwg

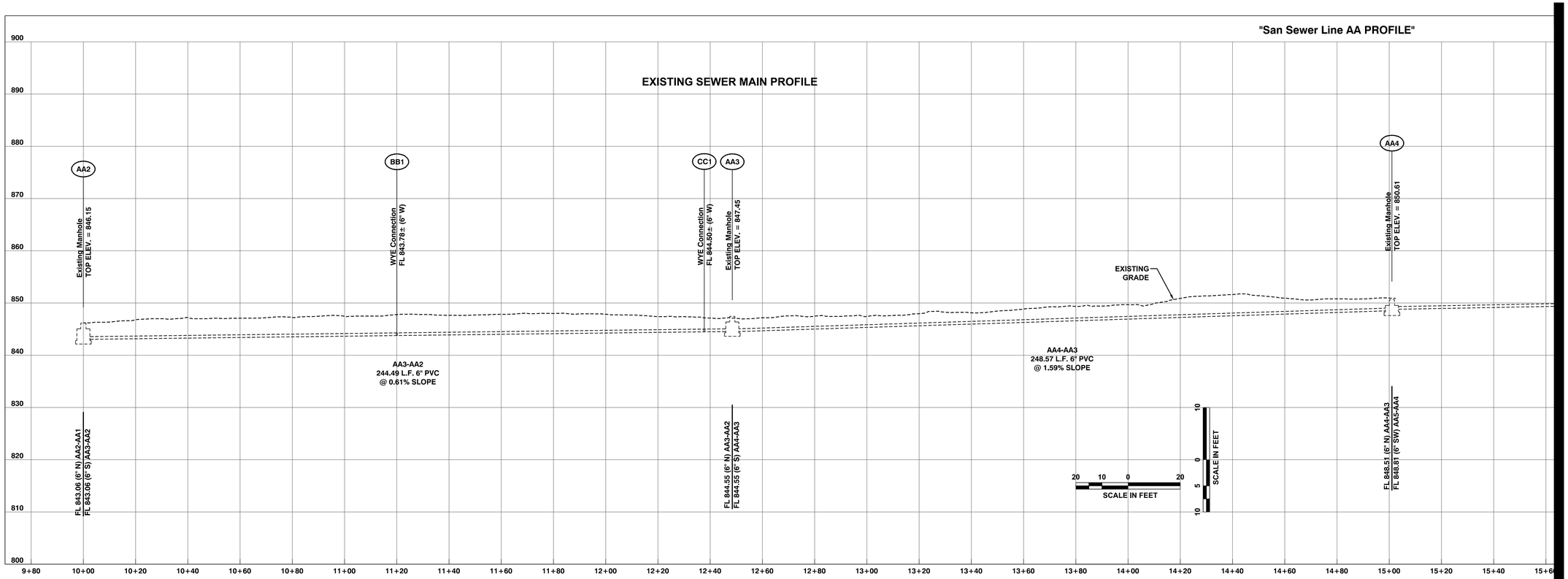

STATE OF MISSOURI
MICHAEL L. PARSON,
GOVERNOR

STATE OF MISSOURI
SASSAN MAHDIAN
NUMBER E-20961
08-29-2019
REGISTERED PROFESSIONAL ENGINEER

MEP Engineer:

Antella
CONSULTING ENGINEERS, INC.

1600 Genessee, Suite 260
Kansas City, Missouri 64102
email: antella@antella-inc.com
Tele 816-421-0950
Fax 816-249-2439

License Name: Antella Consulting Engineers, Inc.
Profession Name: Professional Engineering Corporation
Licensee Number: E-2005013590

Civil Engineer:

SK Design Group, Inc.

Civil Engineers
4600 College Blvd., Suite 100
Overland Park, KS 66211
(913)-451-1818
fax (913)-451-7599
www.skdg.com

License Name: SK Design Group, Inc.
Profession Name: Professional Engineering Corporation
Licensee Number: E-1274-F

OFFICE OF ADMINISTRATION
DIVISION OF FACILITIES MANAGEMENT,
DESIGN AND CONSTRUCTION

DEPARTMENT OF AGRICULTURE

UPGRADE INNER CAMPGROUND UTILITIES

MISSOURI STATE FAIRGROUNDS
2503 W 16TH STREET
SEDALIA, MISSOURI 65301

PROJECT # F1905-01
SITE # 1501
FACILITY # 3511501142

REVISION:
DATE:
REVISION:
DATE:
REVISION:
DATE:
ISSUE DATE: 08/29/2019

CAD DWG FILE:
DRAWN BY:
CHECKED BY:
DESIGNED BY:

SHEET TITLE:

SANITARY SEWER PROFILE - 1

SHEET NUMBER:

C421

SHEET 7 OF 25
08/29/2019

u:\2019\19-110\2019-08-29 bid set\c421-19110sswprpf.dwg

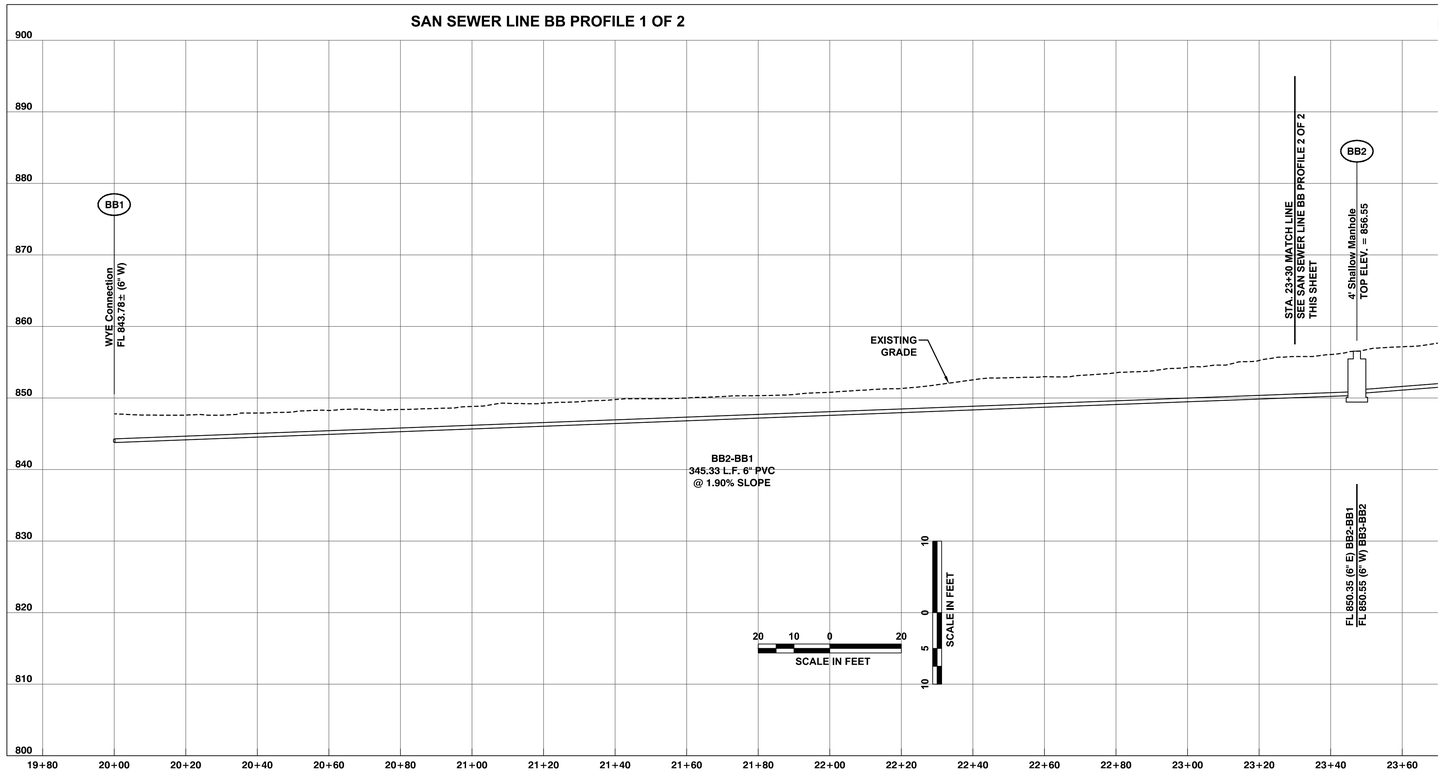

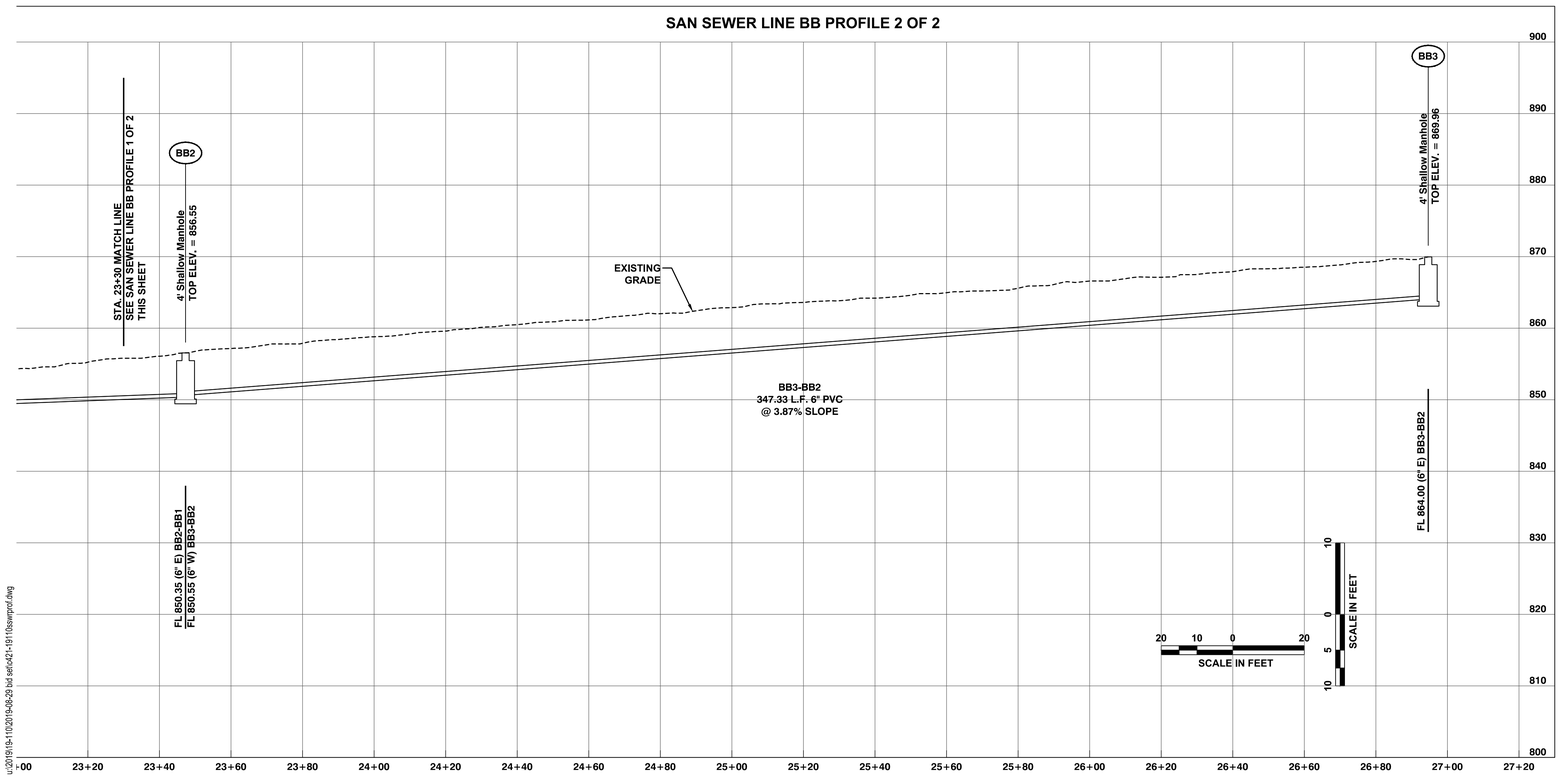

u:\2019\5-110\2019-08-29 bid set\v021-19110sewprof.dwg

STATE OF MISSOURI
MICHAEL L. PARSON,
GOVERNOR

STATE OF MISSOURI
SASSAN MAHBIAN
NUMBER E-20961
8-29-2019
REGISTERED PROFESSIONAL ENGINEER

MEP Engineer:

Antella
CONSULTING ENGINEERS, INC.

1600 Genessee, Suite 260 Tele 816-421-0950
Kansas City, Missouri 64102 Fax 816-249-2439
email: antella@antella-inc.com

License Name: Antella Consulting Engineers, Inc.
Profession Name: Professional Engineering Corporation
Licensee Number: E-2005013590

Civil Engineer:

SK Design Group, Inc.
Civil Engineers
4600 College Blvd., Suite 100
Overland Park, KS 66211
(913)-451-1818
fax (913)-451-7599
www.skdg.com

License Name: SK Design Group, Inc.
Profession Name: Professional Engineering Corporation
Licensee Number: E-1274-F

OFFICE OF ADMINISTRATION
DIVISION OF FACILITIES MANAGEMENT,
DESIGN AND CONSTRUCTION

DEPARTMENT OF AGRICULTURE

UPGRADE INNER CAMPGROUND UTILITIES

MISSOURI STATE FAIRGROUNDS
2503 W 16TH STREET
SEDALIA, MISSOURI 65301

PROJECT # F1905-01
SITE # 1501
FACILITY # 3511501142

REVISION:
DATE:
REVISION:
DATE:
REVISION:
DATE:
ISSUE DATE: 08/29/2019

CAD DWG FILE:
DRAWN BY:
CHECKED BY:
DESIGNED BY:

SHEET TITLE:

SANITARY SEWER PROFILE - 2

SHEET NUMBER:

C422

SHEET 8 OF 25
08/29/2019

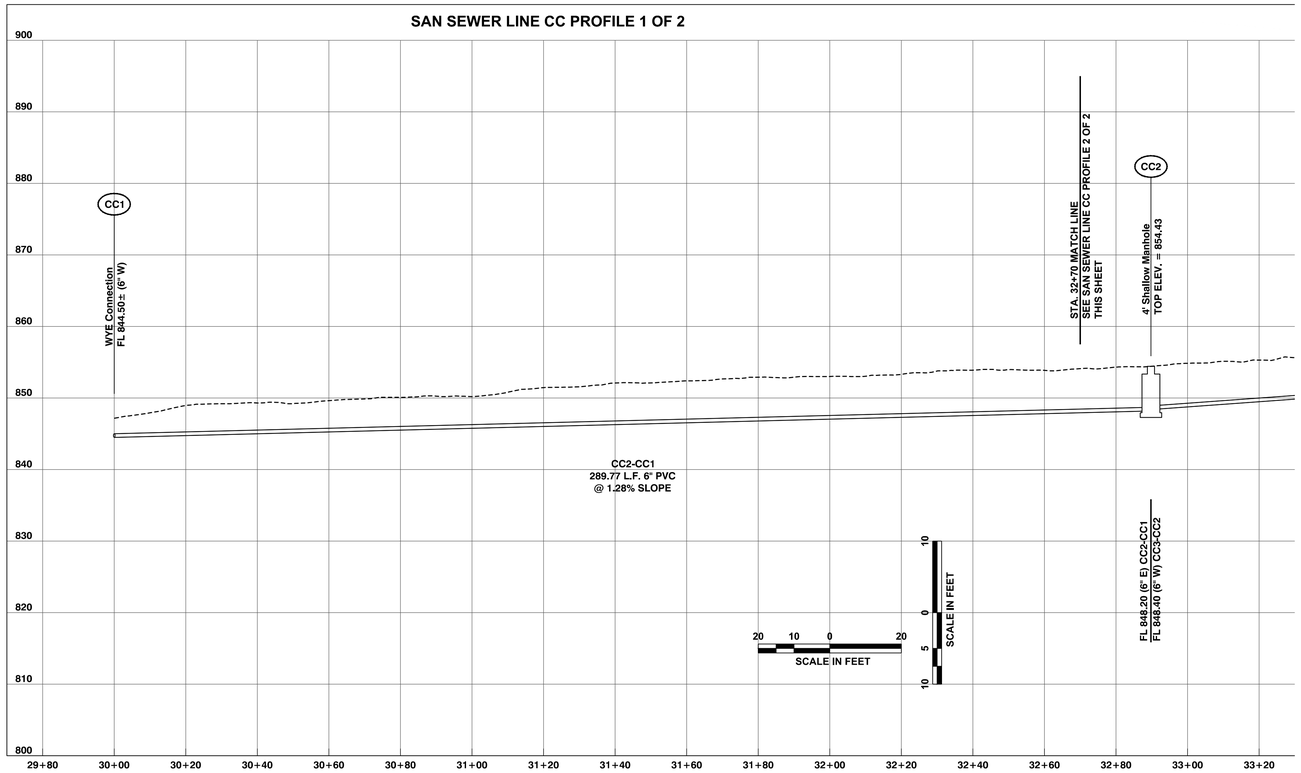

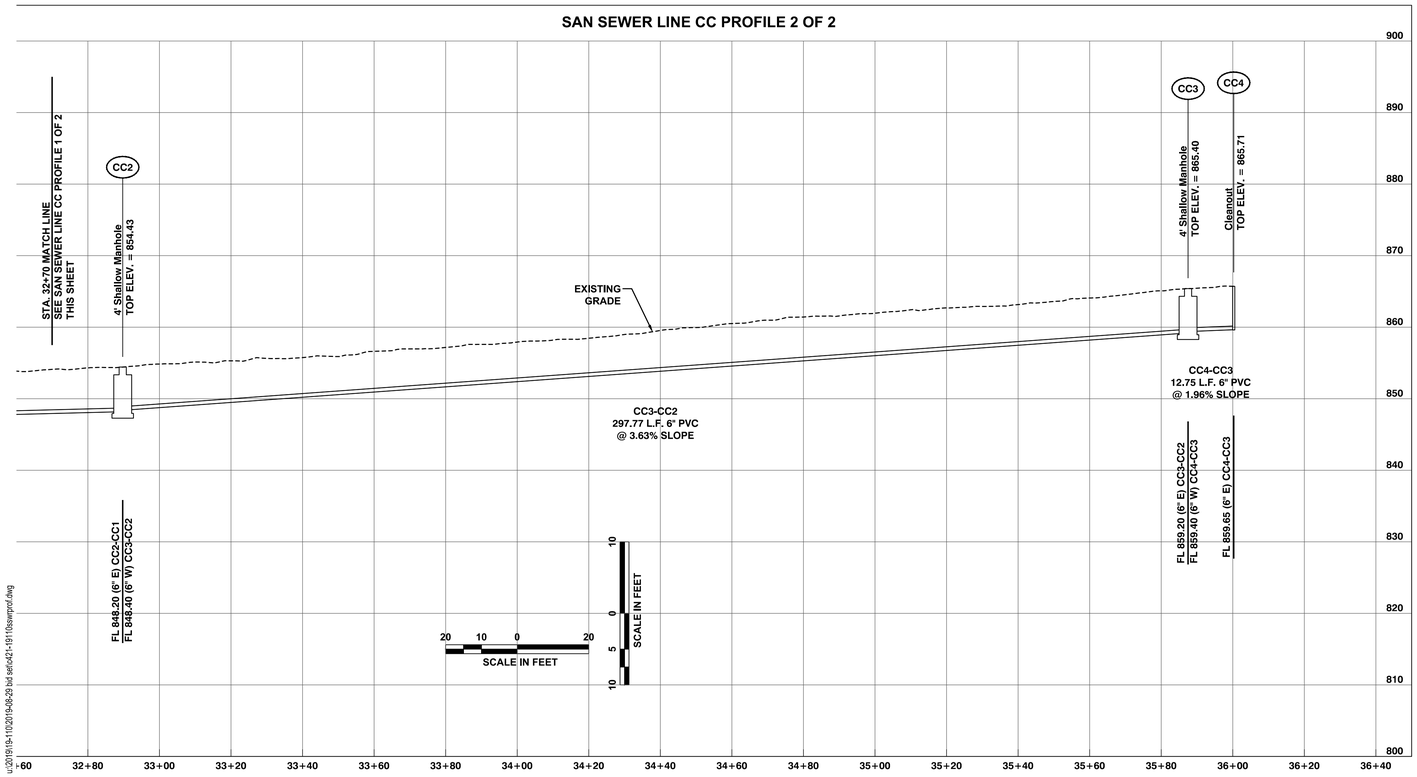

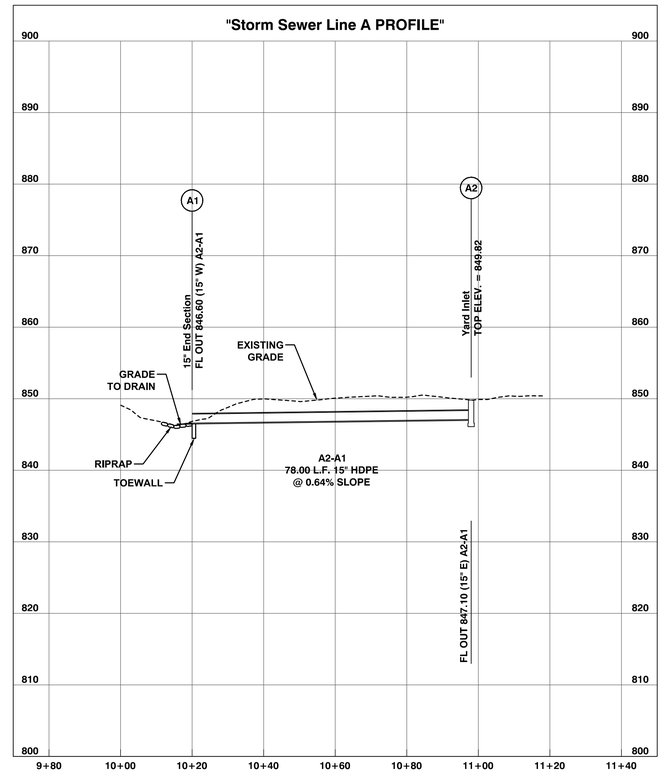

u:\2019\15-110\2019-08-29 bid set\v021-19110sewerprof.dwg

STATE OF MISSOURI
MICHAEL L. PARSON,
GOVERNOR

STATE OF MISSOURI
SASSAN MAHDIAN
NUMBER E-20961
8-29-2019
REGISTERED PROFESSIONAL ENGINEER

MEP Engineer:

Antella
CONSULTING ENGINEERS INC.

1600 Genessee, Suite 260 Tele 816-421-0950
Kansas City, Missouri 64102 Fax 816-249-2439
email: antella@antella-inc.com

License Name: Antella Consulting Engineers, Inc.
Profession Name: Professional Engineering Corporation
Licensee Number: E-2005013590

Civil Engineer:

SK Design Group, Inc.

Civil Engineers
4600 College Blvd., Suite 100
Overland Park, KS 66211
(913)-451-1818
fax (913)-451-7599
www.skdg.com

License Name: SK Design Group, Inc.
Profession Name: Professional Engineering Corporation
Licensee Number: E-1274-F

OFFICE OF ADMINISTRATION
DIVISION OF FACILITIES MANAGEMENT,
DESIGN AND CONSTRUCTION

DEPARTMENT OF AGRICULTURE

UPGRADE INNER CAMPGROUND UTILITIES

MISSOURI STATE FAIRGROUNDS
2503 W 16TH STREET
SEDALIA, MISSOURI 65301

PROJECT # F1905-01
SITE # 1501
FACILITY # 3511501142

REVISION:
DATE:
REVISION:
DATE:
REVISION:
DATE:
ISSUE DATE: 08/29/2019

CAD DWG FILE:
DRAWN BY:
CHECKED BY:
DESIGNED BY:

SHEET TITLE:

SANITARY SEWER PROFILE - 3

SHEET NUMBER:

C423

SHEET 9 OF 25
08/29/2019

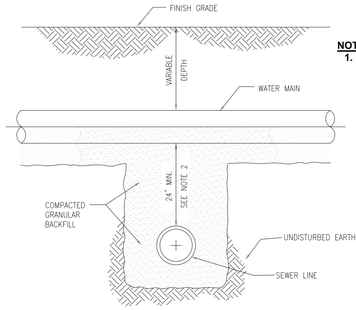

NOTE:
1. **CONTRACTOR SHALL COORDINATE WITH OWNER'S PERSONNEL FOR POSSIBLE OWNER WORK PRIOR TO BACKFILLING UTILITY TRENCHES.**

NOTES:
1. SEWERS CROSSING WATER MAINS SHALL BE LAID TO PROVIDE A VERTICAL SEPARATION THAT IS NO LESS THAN 24 INCHES BETWEEN THE OUTSIDE OF THE WATER MAIN AND THE OUTSIDE OF THE SEWER MAIN.
2. THE CROSSING SHALL BE ARRANGED SO THAT THE SEWER LINE CROSSES BELOW THE WATER LINE. CROSSINGS IN WHICH THE SEWER LINE IS ABOVE THE WATER LINE WILL ONLY BE APPROVED ON A CASE BY CASE BASIS.
3. THE CROSSING SHALL BE ARRANGED SO THAT THE ENDS OF A FULL JOINT OF PIPE WILL BE EQUIDISTANT FROM THE WATER MAIN AND AS FAR AS POSSIBLE FROM THE WATER MAIN JOINTS.
4. IF THE VERTICAL SEPARATION BETWEEN THE WATER MAIN AND SEWER MAIN IS LESS THAN 18 INCHES, THE SEWER MAIN SHALL BE D.I.P. OR PRESSURE RATED PVC PIPE WITH A PRESSURE RATING THAT IS EQUAL TO OR GREATER THAN THE WATER MAIN. THE D.I.P. OR PRESSURE RATED P.V.C. MUST BE EXTENDED A DISTANCE 10 FEET ON BOTH SIDES OF THE WATER MAIN. THE TRANSITION BETWEEN PIPE MATERIALS SHALL BE ACCOMPLISHED WITH A RESTRAINED MECHANICAL TYPE JOINT OR FITTING. FLEXIBLE TYPE (FERNCO) FITTINGS ARE NOT ACCEPTABLE.
5. FORCE MAIN SEWER LINE AND WATER LINE CROSSINGS SHALL BE REVIEWED ON A CASE BY CASE BASIS.

1 GRAVITY SEWER AND WATER LINE CROSSING
Not to Scale

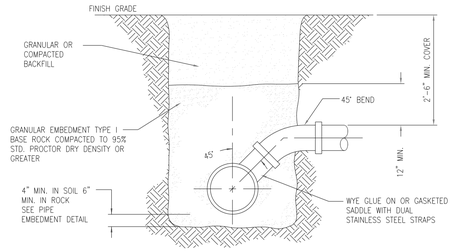

NOTE:
VCP PIPES SHALL NOT BE TAPPED.
REPLACE SECTION OF VCP WITH PVC AND FITTING.

STANDARD SERVICE CONNECTION
NOT TO SCALE

2 STANDARD SERVICE CONNECTION
Not to Scale

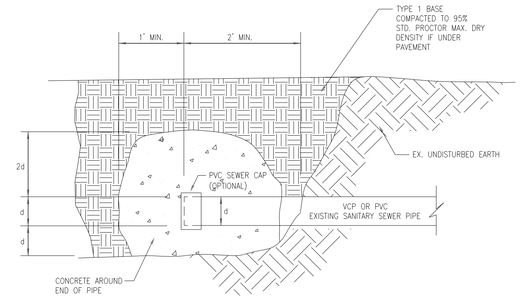

NOTE:
CONTRACTOR SHALL ENSURE SEWER LINE BEING ABANDONED IS NO LONGER IN SERVICE

EXISTING SANITARY SEWER ABANDONMENT DETAIL
NOT TO SCALE

3 EXISTING SANITARY SEWER ABANDONMENT DETAIL
Not to Scale

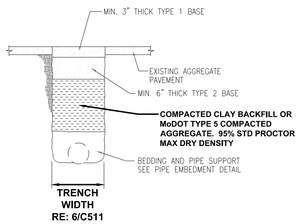

NOTE:
1. **CONTRACTOR SHALL COORDINATE WITH OWNER'S PERSONNEL FOR POSSIBLE OWNER WORK PRIOR TO BACKFILLING UTILITY TRENCHES.**

4 EXISTING AGGREGATE PAVEMENT PATCH
Not to Scale

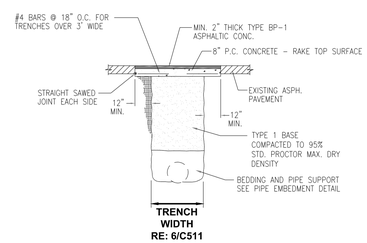

NOTES:
1. **CONCRETE SHALL BE CLASS A PER PROJECT SPECIFICATIONS.**
2. **REINFORCING STEEL SHALL BE GRADE 60.**
3. **CONTRACTOR SHALL COORDINATE WITH OWNER'S PERSONNEL FOR POSSIBLE OWNER WORK PRIOR TO BACKFILLING UTILITY TRENCHES.**

5 EXISTING ASPHALTIC PAVEMENT PATCH
Not to Scale

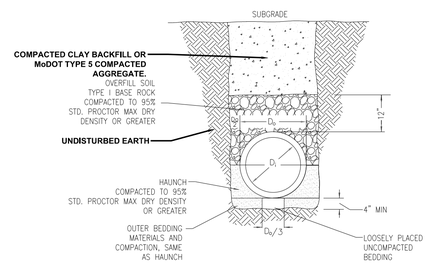

NOTE:
1. **CONTRACTOR SHALL COORDINATE WITH OWNER'S PERSONNEL FOR POSSIBLE OWNER WORK PRIOR TO BACKFILLING UTILITY TRENCHES.**

6 TYPICAL PIPE EMBEDMENT
Not to Scale

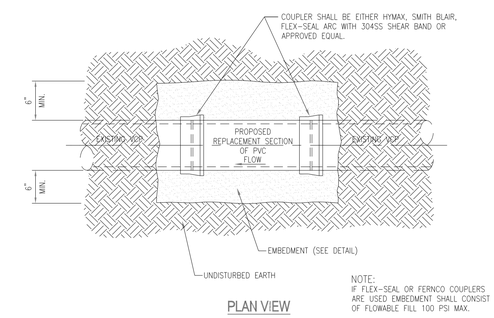

PLAN VIEW

NOTE:
IF FLEX-SEAL OR FERNCO COUPLERS ARE USED EMBEDMENT SHALL CONSIST OF FLOWABLE FILL 100 PSI MAX.

7 VCP / PVC CONNECTION
Not to Scale

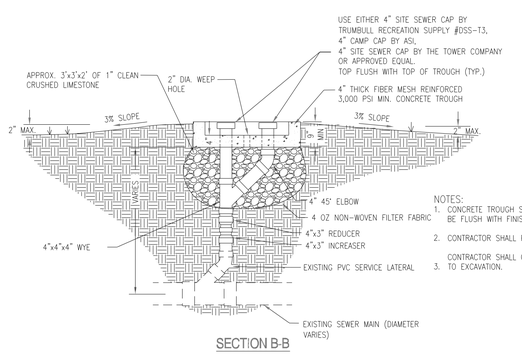

SECTION B-B

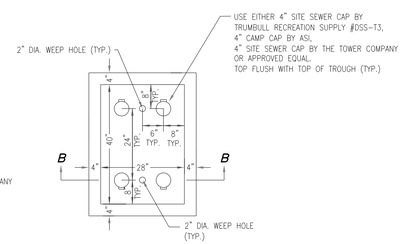

PLAN VIEW
4 CONNECTIONS
TYPE IV

NOTES:
1. CONCRETE TROUGH SHALL HAVE A LIGHT BROOM FINISH AND SHALL BE FLUSH WITH FINISH GRADE AFTER BACKFILL.
2. CONTRACTOR SHALL PROVIDE SHOP DRAWINGS.
3. CONTRACTOR SHALL CONTACT 1-800-DIG-RITE 72 HOURS PRIOR TO EXCAVATION.

8 TYPICAL RV/VENDOR SERVICE CONNECTION DETAIL
Not to Scale

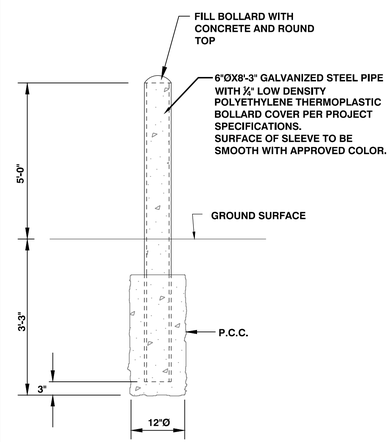

9 TYPICAL BOLLARD DETAIL
Not to Scale

u:\2019\15-110\2019-08-29 bid set\c511-19110details1.dwg

STATE OF MISSOURI
MICHAEL L. PARSON,
GOVERNOR

MEP Engineer:
Antella
CONSULTING ENGINEERS INC.
1600 Genessee, Suite 260 Tele 816-421-0950
Kansas City, Missouri 64102 Fax 816-249-2439
email: antella@antella-inc.com
License Name: Antella Consulting Engineers, Inc.
Profession Name: Professional Engineering Corporation
Licensee Number: E-2005013590

Civil Engineer:
SK Design Group, Inc.
Civil Engineers
4600 College Blvd., Suite 100
Overland Park, KS 66211
(913)-451-1818
fax (913)-451-7599
www.skdg.com
License Name: SK Design Group, Inc.
Profession Name: Professional Engineering Corporation
Licensee Number: E-1274-F

OFFICE OF ADMINISTRATION
DIVISION OF FACILITIES MANAGEMENT,
DESIGN AND CONSTRUCTION

DEPARTMENT OF AGRICULTURE

UPGRADE INNER CAMPGROUND UTILITIES

MISSOURI STATE FAIRGROUNDS
2503 W 16TH STREET
SEDALIA, MISSOURI 65301

PROJECT # F1905-01
SITE # 1501
FACILITY # 3511501142

REVISION:
DATE:
REVISION:
DATE:
REVISION:
DATE:
ISSUE DATE: 08/29/2019

CAD DWG FILE:
DRAWN BY:
CHECKED BY:
DESIGNED BY:

SHEET TITLE:

SITE DETAILS - 1

SHEET NUMBER:

C511

SHEET 10 OF 25
08/29/2019

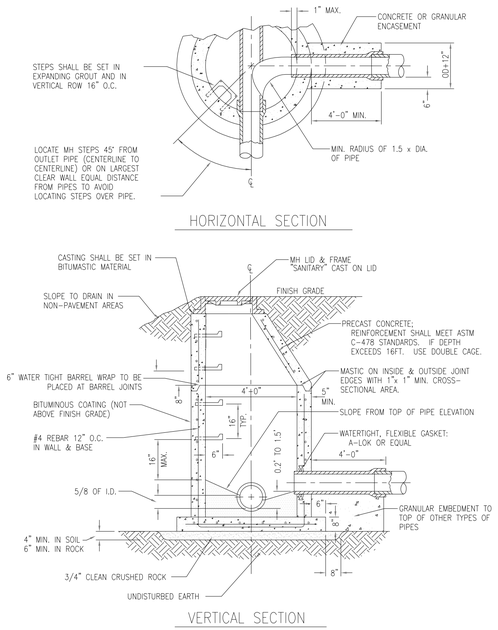

1 STANDARD MANHOLE
Not to Scale

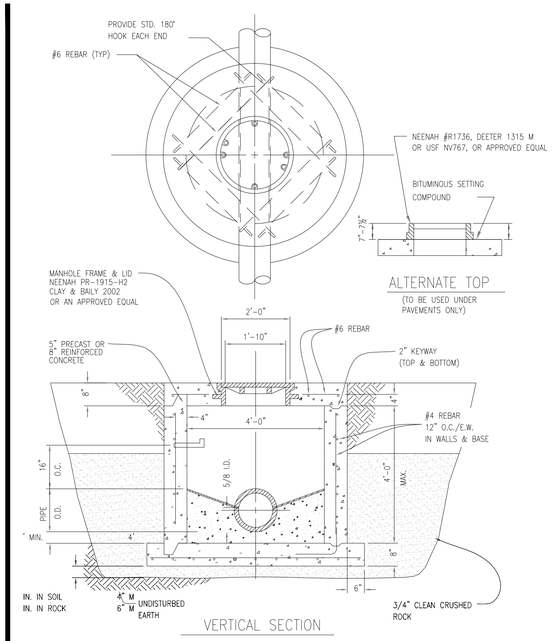

2 SHALLOW FLAT TOP MANHOLE
Not to Scale

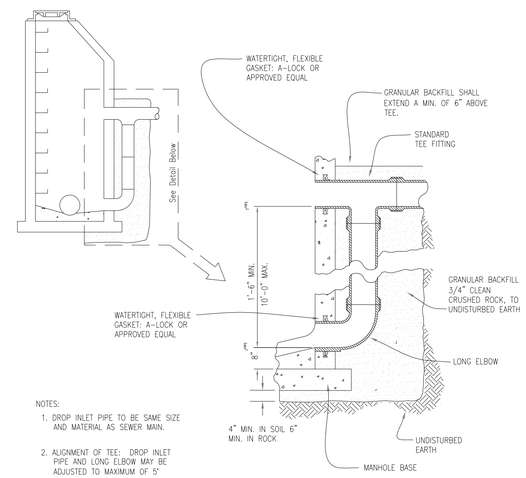

NOTES:
1. DROP INLET PIPE TO BE SAME SIZE AND MATERIAL AS SEWER MAIN.
2. ALIGNMENT OF TEE: DROP INLET PIPE AND LONG ELBOW MAY BE ADJUSTED TO MAXIMUM OF 5° DEFLECTION TO COMPENSATE FOR SLOPE OF SEWER LINE.

3 STANDARD DROP MANHOLE
Not to Scale

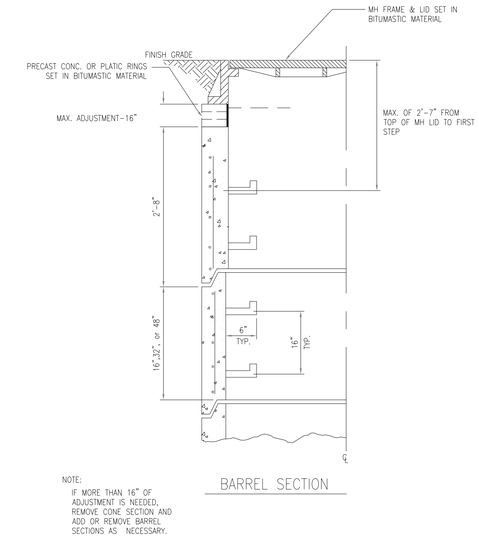

NOTE:
IF MORE THAN 16" OF ADJUSTMENT IS NEEDED, REMOVE CONE SECTION AND ADD OR REMOVE BARREL SECTIONS AS NECESSARY.

4 MANHOLE ADJUSTMENT
Not to Scale

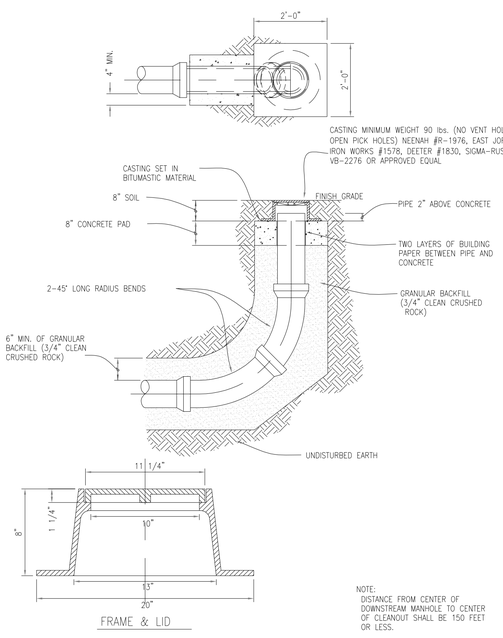

NOTE:
DISTANCE FROM CENTER OF DOWNSTREAM MANHOLE TO CENTER OF CLEANOUT SHALL BE 150 FEET OR LESS.

5 STANDARD CLEANOUT
Not to Scale

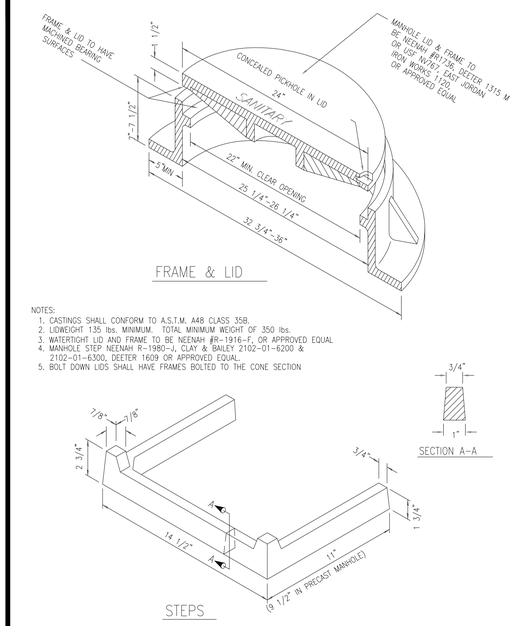

NOTES:
1. CASTINGS SHALL CONFORM TO A.S.T.M. A48 CLASS 35B.
2. LIDWEIGHT 135 lbs. MINIMUM. TOTAL MINIMUM WEIGHT OF 350 lbs.
3. WATERTIGHT LID AND FRAME TO BE NEENAH #R-1916-F, OR APPROVED EQUAL
4. MANHOLE STEP NEENAH R-1980-J, CLAY & BAILEY 2102-01-6200 & 2102-01-6300, DEETER 1609 OR APPROVED EQUAL
5. BOLT DOWN LIDS SHALL HAVE FRAMES BOLTED TO THE CONE SECTION

6 MANHOLE CASTINGS (FRAME, LID & STEPS)
Not to Scale

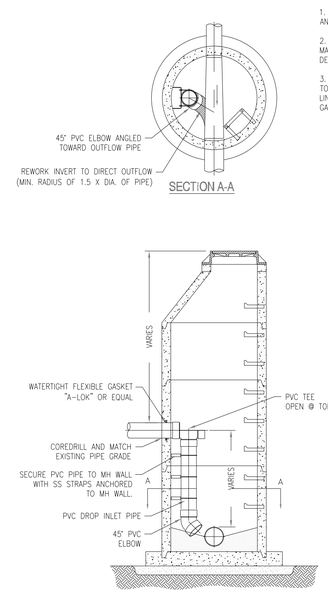

NOTES:
1. DROP INLET PIPE TO BE SAME SIZE AND MATERIAL AS SEWER LINE.
2. ALIGNMENT OF TEE: DROP INLET PIPE MAY BE ADJUSTED TO A MAXIMUM OF 5° DEFLECTION.
3. ANNULAR SPACE AROUND NEW PIPE TO BE SEALED WITH NON-SHRINK GROUT, LINK SEAL, OR WATERTIGHT AND FLEXIBLE GASKET.

7 INSIDE DROP MANHOLE CONNECTION
Not to Scale

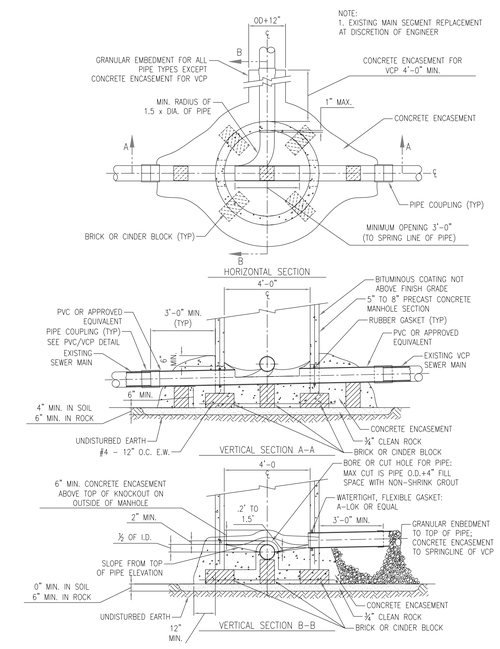

NOTE:
1. EXISTING MAIN SEGMENT REPLACEMENT AT DISCRETION OF ENGINEER

8 DOGHOUSE MANHOLE
Not to Scale

u:\2019\19-110\2019-08-28 bid set\d511+191100details1.dwg

STATE OF MISSOURI
MICHAEL L. PARSON,
GOVERNOR

STATE OF MISSOURI
SASSAN MAHDIAN
NUMBER E-20961
8-29-2019
REGISTERED PROFESSIONAL ENGINEER

MEP Engineer:

Antella
CONSULTING ENGINEERS INC.

1600 Genessee, Suite 260 Tele 816-421-0950
Kansas City, Missouri 64102 Fax 816-249-2439
email: antella@antella-inc.com

License Name: Antella Consulting Engineers, Inc.
Profession Name: Professional Engineering Corporation
Licensee Number: E-2005013590

Civil Engineer:

SK Design Group, Inc.
Civil Engineers
4600 College Blvd., Suite 100
Overland Park, KS 66211
(913)-451-1818
fax (913)-451-7599
www.skdg.com

License Name: SK Design Group, Inc.
Profession Name: Professional Engineering Corporation
Licensee Number: E-1274-F

OFFICE OF ADMINISTRATION
DIVISION OF FACILITIES MANAGEMENT,
DESIGN AND CONSTRUCTION

DEPARTMENT OF AGRICULTURE

UPGRADE INNER CAMPGROUND UTILITIES

MISSOURI STATE FAIRGROUNDS
2503 W 16TH STREET
SEDALIA, MISSOURI 65301

PROJECT # F1905-01
SITE # 1501
FACILITY # 3511501142

REVISION:
DATE:
REVISION:
DATE:
REVISION:
DATE:
ISSUE DATE: 08/29/2019

CAD DWG FILE:
DRAWN BY:
CHECKED BY:
DESIGNED BY:

SHEET TITLE:

SITE DETAILS - 2

SHEET NUMBER:

C512

SHEET 11 OF 25
08/29/2019

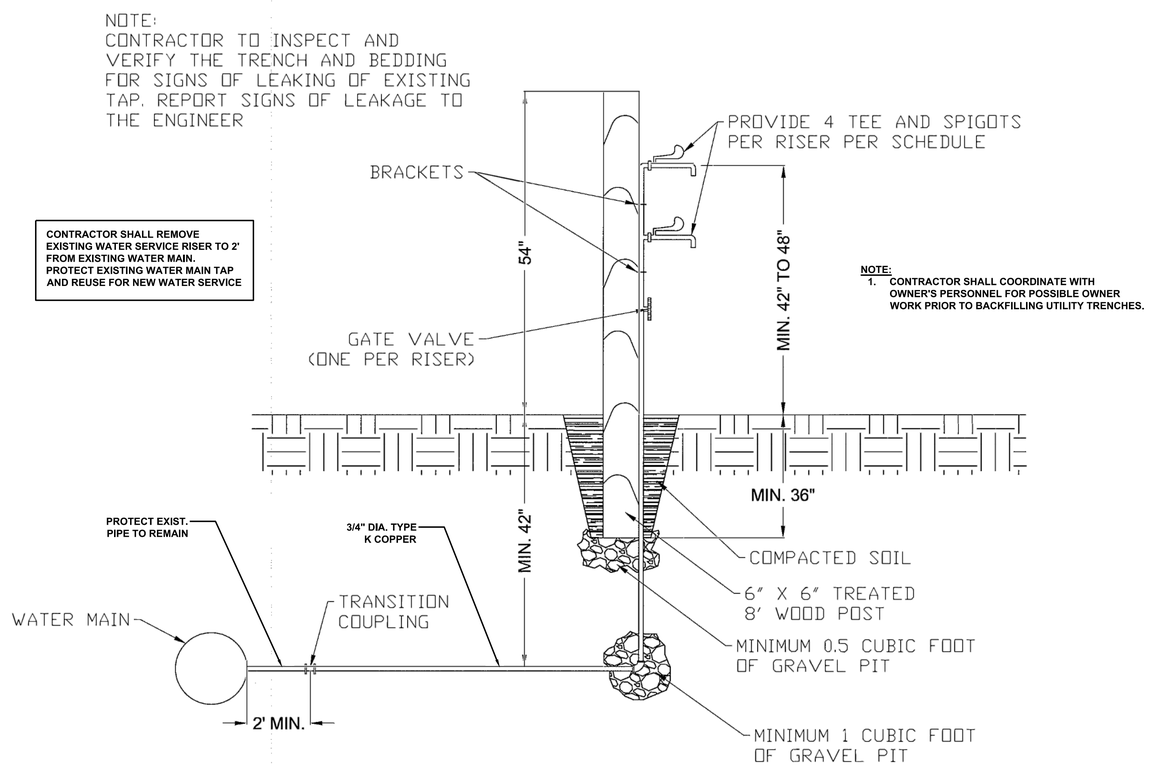

NOTE:
1. CONTRACTOR SHALL COORDINATE WITH OWNER'S PERSONNEL FOR POSSIBLE OWNER WORK PRIOR TO BACKFILLING UTILITY TRENCHES.

1 WATER SERVICE RISER
Not to Scale

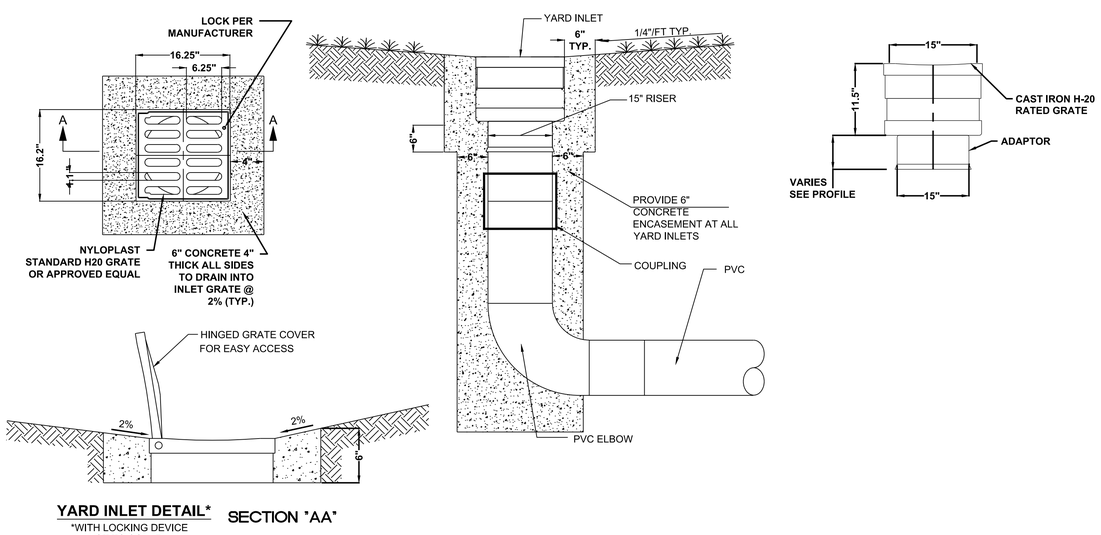

2 YARD INLET DETAIL
Not to Scale

u:\2019\19-110\20\19-06-28 bid set\c511+19110details1.dwg

STATE OF MISSOURI
MICHAEL L. PARSON,
GOVERNOR

STATE OF MISSOURI
SASSAN MAHDIAN
NUMBER E-20961
REGISTERED PROFESSIONAL ENGINEER
8-29-2019

MEP Engineer:

Antella
CONSULTING ENGINEERS, INC.

1600 Genessee, Suite 260
Kansas City, Missouri 64102
email: antella@antella-inc.com
Tele 816-421-0950
Fax 816-249-2439

License Name: Antella Consulting Engineers, Inc.
Profession Name: Professional Engineering Corporation
Licensee Number: E-2005013590

Civil Engineer:

SK Design Group, Inc.
Civil Engineers
4600 College Blvd., Suite 100
Overland Park, KS 66211
(913)-451-1818
fax (913)-451-7599
www.skdg.com

License Name: SK Design Group, Inc.
Profession Name: Professional Engineering Corporation
Licensee Number: E-1274-F

OFFICE OF ADMINISTRATION
DIVISION OF FACILITIES MANAGEMENT,
DESIGN AND CONSTRUCTION

DEPARTMENT OF AGRICULTURE

UPGRADE INNER CAMPGROUND UTILITIES

MISSOURI STATE FAIRGROUNDS
2503 W 16TH STREET
SEDALIA, MISSOURI 65301

PROJECT # F1905-01
SITE # 1501
FACILITY # 3511501142

REVISION:
DATE:
REVISION:
DATE:
REVISION:
DATE:
ISSUE DATE: 08/29/2019

CAD DWG FILE:
DRAWN BY:
CHECKED BY:
DESIGNED BY:

SHEET TITLE:

SITE DETAILS - 3

SHEET NUMBER:

C513

SHEET 12 OF 25
08/29/2019

GENERAL DEMO NOTES:

A) REMOVE ALL WIRING (CONDUIT, CONDUCTORS, BOXES, ETC.) ABANDONED AS PART OF THIS PROJECT.

B) ANY EXISTING DEVICE AND/OR CIRCUIT SHOWN ARE INDICATED ONLY FOR INFORMATION PURPOSES. THE ELECTRICAL CONTRACTOR SHALL VISIT THE SITE AND VERIFY ALL CONDITIONS AS THEY EXIST AND SHALL REMOVE, RELOCATE AND/OR REWORK ANY ELECTRICAL EQUIPMENT OR CIRCUITS NECESSARY FOR A COMPLETE REWIRING SYSTEM.

C) UNLESS NOTED OTHERWISE,THE ELECTRICAL CONTRACTOR SHALL FAMILIARIZE THEMSELVES WITH ALL WORK TO BE DONE BY OBSERVATION OF THE SITE. FAILURE TO DO SO WILL NOT RELIEVE THE CONTRACTOR OF THE RESPONSIBILITY FOR PERFORMING ALL WORK NECESSARY TO PROVIDE A WORKMANLIKE INSTALLATION.

D) ALL WORK SHALL CONFORM TO THE APPLICABLE PROVISIONS OF THE LATEST NATIONAL ELECTRICAL CODE, UNDERWRITER'S LABORATORIES, INC., OCCUPATIONAL SAFETY AND HEALTH ACT, AND ALL STATE, LOCAL, MUNICIPAL, AND STATUTORY REQUIREMENTS.

E) WHERE NEW WORK INTERFERES WITH CIRCUITS OTHERWISE UNDISTURBED, EXISTING CIRCUITS SHALL BE REWORKED AS REQUIRED TO MAINTAIN SERVICE.

F) THE ELECTRICAL CONTRACTOR SHALL FIELD VERIFY THE LOCATION OF ALL EXISTING UTILITIES AND SHALL BE RESPONSIBLE FOR THE PROTECTION OF THE SAME DURING THE COURSE OF THIS WORK. EXISTING UTILITIES, EXISTING BUILDING, AND/OR MATERIALS WHICH ARE DAMAGED BY NEGLIGENCE ON THIS CONTRACTOR'S PART OR ANY PARTIES ASSOCIATED WITH THIS CONTRACTOR, SHALL BE REPAIRED OR REPLACED AT THIS CONTRACTOR'S EXPENSE, IN A TIMELY MANNER, AND TO THE ARCHITECT'S AND OWNER'S WRITTEN ACCEPTANCE.

G) COORDINATE ALL DEMOLITION WORK WITH FAIRGROUND PERSONNEL, KCPL AND TELECOM PROVIDER PERSONNEL.

H) MAINTAIN CONTINUITY OF EXISTING CIRCUITS SERVING DEVICES, FIXTURES OR EQUIPMENT TO REMAIN.

GENERAL NOTES: (TYPICAL ALL SHEETS)

A) ANY MATERIAL REMOVED THAT OWNER DOES NOT WISH TO RETAIN SHALL BE REMOVED FROM PROJECT SITE AND DISPOSED OF BY THE CONTRACTOR.

B) NEW CIRCUITRY SHOWN FOR NEW/EXISTING POWER IS DIAGRAMMATIC AND IS INTENDED TO SHOW WHICH DEVICES ARE TO BE GROUPED ON INDIVIDUAL CIRCUITS.

C) TYPEWRITTEN PANELBOARD DIRECTORY SHALL BE PROVIDED FOR EACH PANELBOARD PROVIDED AS PART OF THE PROJECT.

D) ALL SINGLE PHASE, SINGLE POLE LOADS TO HAVE DEDICATED NEUTRALS. LABEL NEUTRAL CONDUCTORS WITH CORRESPONDING CIRCUIT NUMBER AT EACH PULL BOX, JUNCTION BOX, HANDHOLE AND OTHER SPLICE POINTS.

E) WHERE ELECTRICAL SITE WORK IS REQUIRED, CONTRACTOR SHALL RESTORE EXISTING SITE TO IT'S ORIGINAL CONDITION. INCLUDING BUT NOT LIMITED TO REPLACING VEGETATION, SOFTSCAPE AND HARDSCAPE REQUIRED TO BE DISTURBED DURING INSTALLATION OF ELECTRICAL COMPONENTS.

F) CONTRACTOR SHALL COMPLY WITH NEC OR ANY OTHER CODES HAVING JURISDICTION.

G) PROTECT EXISTING OWNER AND UTILITY-OWNED TELECOM EQUIPMENT, CABLING AND ASSOCIATED POWER/TELEPHONE SERVICE FROM CONSTRUCTION RELATED DAMAGE. ANY DAMAGE SHALL BE REPAIRED TO OWNER'S SATISFACTION AT CONTRACTOR'S EXPENSE.

H) ALL EMPTY CONDUITS SHALL BE PROVIDED WITH A PULL WIRE.

I) ELECTRICAL CONTRACTOR TO VERIFY EXACT PLACEMENT OF ALL DEVICES SHOWN ON THE ELECTRICAL CONSTRUCTION DOCUMENTS WITH CIVIL DOCUMENTS PRIOR TO FINAL PLACEMENT.

J) ALL NEW PANELBOARDS, SWITCHBOARDS AND LINE VOLTAGE CONTROL EQUIPMENT SHALL BE FIELD MARKED TO WARN QUALIFIED PERSONS OF POTENTIAL ELECTRIC ARC FLASH HAZARDS. MARKING SHALL BE LOCATED SO AS TO BE CLEARLY VISIBLE TO QUALIFIED PERSONS BEFORE EXAMINATION, ADJUSTING, SERVICING OR MAINTENANCE OF EQUIPMENT. MARKING SHALL BE SELF ADHESIVE, COMMERCIAL LABEL CONFORMING TO NEC AND ANSI REQUIREMENTS.

K) THE ELECTRICAL CONTRACTOR SHALL MAINTAIN ACCURATE RECORDS OF "AS-BUILT" CONDITIONS AND ANY MODIFICATIONS TO THE EXISTING SYSTEMS WHICH ARE TO REMAIN AND SHALL, UPON COMPLETION OF THIS PROJECT, DELIVER "RECORD" DRAWINGS TO THE ARCHITECT INDICATING ALL SUCH CHANGES. THE CONTRACTOR SHALL MAINTAIN IN THE PROJECT OFFICE, AS WORK PROGRESSES, AN UP-TO-DATE NEATLY MARKED COPY OF THESE DRAWINGS FOR REVIEW BY THE APPROPRIATE PARTIES.

ELECTRICAL SYMBOLS

	BRANCH CIRCUIT CONCEALED IN CEILING OR WALL. ARROWS INDICATE HOMERUNS TO PANEL. ALL CONDUCTORS #12 AWG UNLESS NOTED OTHERWISE. EACH SINGLE PHASE CIRCUIT TO HAVE DEDICATED NEUTRAL.
	PHASE CONDUCTORS
	NEUTRAL CONDUCTOR
	GROUND CONDUCTOR
LP1-10	PANEL - BREAKER NUMBER (IDENTIFICATION)
1/3, 1/3/5	INDICATES X/X= 2-POLE C.B., X/X/X = 3-POLE C.B.
3 5 1	HOMERUN INDICATED LIKE THIS INDICATED THREE SEPARATE SINGLE PHASE CIRCUITS. EACH CIRCUIT TO HAVE DEDICATED NEUTRAL.
	CONDUIT CONCEALED IN CEILING OR WALL WITH THREE CONDUCTORS: 1-PHASE; 1-NEUTRAL; 1-GROUND WIRE, NO.12 AWG UNLESS OTHERWISE SPECIFIED ON DRAWINGS.
	CONDUIT RUN UNDERGROUND OR CONCEALED IN FLOOR SLAB.
	GROUNDING CONDUCTOR NO.12 WIRE EXCEPT AS NOTED
	POLE MOUNTED LIGHT FIXTURE
	DISTRIBUTION PANEL (SURFACE MOUNTED).
	SURFACE MOUNTED EQUIPMENT, TYPE AS INDICATED ON DRAWINGS
T	PAD MOUNTED TRANSFORMER
S	SECTIONALIZER CABINET, GRADE MOUNTED
SW	PAD MOUNTED SWITCHGEAR
	CONDUIT UP
	CONDUIT DOWN
	CONDUIT STUBBED THRU WALL WITH BUSHINGS ON BOTH ENDS. SIZE AS NOTED ON PLANS.
	GROUND
	POWER CONNECTION POINT
	DISCONNECT SWITCH, SIZE AND TYPE AS NOTED TOP MOUNTED 5'-0" AFF
J	WALL MOUNTED OR CEILING MOUNTED JUNCTION BOX.
+3'-10"	HEIGHT TO CENTERLINE OF OUTLET BOX ABOVE FINISHED FLOOR
AFG	ABOVE FINISH GRADE
ETR	EXISTING TO REMAIN

WIRING SCHEDULE - VOLTAGE DROP

DISTANCE	CONDUCTOR SIZE
120V - 20A BRANCH CIRCUIT	
UP TO 100'	#12
100' - 150'	#10
150' - 250'	#8
250' - OVER	#6
277V - 20A BRANCH CIRCUIT	
UP TO 200'	#12
200' - 375'	#10
375' - OVER	#8

NOTE
FOR CIRCUITS WITH #6 CONDUCTORS, REDUCE TO #8 CONDUCTORS AT PANEL FOR FINAL CONNECTION TO CIRCUIT BREAKER. SIZES LISTED ARE BASED ON COPPER CONDUCTORS.

PLAN NOTE LEGEND

ED000	ELECTRICAL DEMOLITION
EP000	POWER

STATE OF MISSOURI
MICHAEL L. PARSON, GOVERNOR

STATE OF MISSOURI
MONICA SANTOYO SANTOS
NUMBER E-2000174546
REGISTERED PROFESSIONAL ENGINEER
8/29/2019

Monica S Santos
MO# E-2000174546

MEP Engineer:

Antella
CONSULTING ENGINEERS INC.

1600 Genessee, Suite 260 Tele 816-421-0950
Kansas City, Missouri 64102 Fax 816-249-2439
email: antella@antella-inc.com

License Name: Antella Consulting Engineers, Inc.
Profession Name: Professional Engineering Corporation
Licensee Number: E-2005013590

Civil Engineer:

SK Design Group, Inc.
Civil Engineers
4600 College Blvd., Suite 100
Overland Park, KS 66211
(913)-451-1818
fax (913)-451-7599
www.skdg.com

License Name: SK Design Group, Inc.
Profession Name: Professional Engineering Corporation
Licensee Number: E-1274-F

OFFICE OF ADMINISTRATION
DIVISION OF FACILITIES MANAGEMENT,
DESIGN AND CONSTRUCTION

DEPARTMENT OF AGRICULTURE

UPGRADE INNER CAMPGROUND UTILITIES

MISSOURI STATE FAIRGROUNDS
2503 W 16TH STREET
SEDALIA, MISSOURI 65301

PROJECT # F1905-01
SITE # 1501
FACILITY # 3511501142

REVISION:
DATE:
REVISION:
DATE:
REVISION:
DATE:
ISSUE DATE: 08/29/2019

CAD DWG FILE:
DRAWN BY: PSJ
CHECKED BY: MSS
DESIGNED BY: PSJ

SHEET TITLE:
ELECTRICAL SYMBOLS LEGEND & GENERAL NOTES

SHEET NUMBER:
E011

SHEET 13 0F 25
08/29/2019

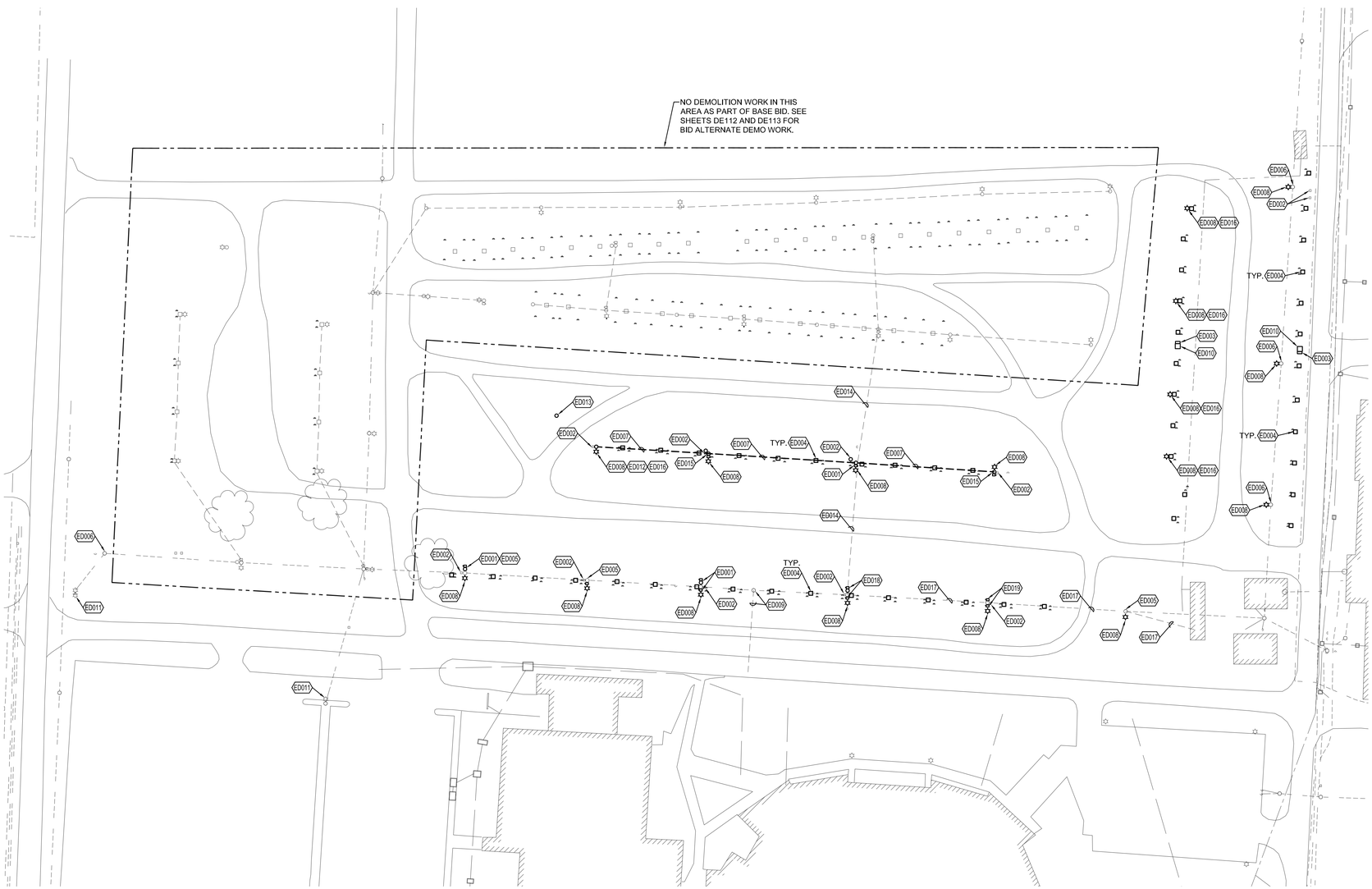

NORTH

ELECTRICAL DEMOLITION PLAN - INNER

1"=60'

0 60' 120'

GENERAL DEMO NOTES

1	CONTRACTOR TO FIELD VERIFY EXACT LOCATION OF ALL EXISTING UTILITIES INCLUDING BUT NOT LIMITED TO TELECOM, POWER, WATER AND SEWER.
2	EXISTING UTILITIES, STRUCTURES, PAVEMENT AND ANY OTHER MATERIALS WHICH ARE DAMAGED BY CONTRACTOR SHALL BE REPAIRED OR REPLACED AT THIS CONTRACTOR'S EXPENSE, IN A TIMELY MANNER, AND TO THE ENGINEER'S AND OWNER'S WRITTEN ACCEPTANCE.
3	REFER TO SHEETS DE112 AND DE132 FOR ALTERNATE #1, #2 AND #3 WORK.

DEMOLITION PLAN NOTES

ED001	DISCONNECT AND REMOVE EXISTING POLE-MOUNT TRANSFORMER, ASSOCIATED SAFETY SWITCHES, WEATHERHEADS AND ASSOCIATED APPURTENANCES SERVING RV PEDESTALS. EXISTING POLE AND OVERHEAD PRIMARY POWER TO REMAIN.
ED002	EXISTING TELECOM PEDESTAL AND ASSOCIATED WIRING TO REMAIN. FIELD VERIFY EXACT LOCATIONS.
ED003	DISCONNECT AND REMOVE EXISTING 120/240V DISTRIBUTION PANELBOARD.
ED004	DISCONNECT AND REMOVE EXISTING RV PEDESTAL. REMOVE FEEDER CONDUIT AND CONDUCTORS BACK TO DISTRIBUTION PANELBOARD POWER SOURCE. FIELD VERIFY EXISTING ROUTING.
ED005	EXISTING POLE AND OVERHEAD PRIMARY POWER TO REMAIN UNLESS OTHERWISE NOTED.
ED006	EXISTING POLE AND ASSOCIATED OVERHEAD PRIMARY AND SITE LIGHTING POWER TO REMAIN.
ED007	DISCONNECT AND REMOVE EXISTING OVERHEAD CONDUCTORS AND ASSOCIATED POLE ARMS, CUTOUTS AND OTHER APPURTENANCES.
ED008	DISCONNECT AND REMOVE EXISTING AREA LIGHTING LUMINAIRE, SAFETY SWITCH AND ASSOCIATED CONDUIT AND CONDUCTORS INCLUDING OVERHEAD DISTRIBUTION EXCEPT AS REQUIRED TO MAINTAIN CONTINUITY OF CIRCUIT SERVING LUMINAIRES TO REMAIN.
ED009	EXISTING POLE, PRIMARY RISER AND UNDERGROUND FEED TO BUILDING TO SOUTH TO REMAIN.
ED010	DISCONNECT AND REMOVE EXISTING PAD-MOUNT TRANSFORMER, ASSOCIATED CONCRETE PAD AND BOLLARDS. REMOVE CONDUCTORS AND CONDUIT (INCLUDING RISER) ON POLE. FIELD VERIFY EXACT LOCATION.
ED011	EXISTING AREA LIGHTING LUMINAIRE AND ASSOCIATED WIRING TO REMAIN.
ED012	EXISTING POLE MOUNTED WI-FI, ASSOCIATED CABLING AND ACCESSORIES TO BE REMOVED BY OWNER.
ED013	EXISTING POLE, TORNADO SIREN AND ASSOCIATED WIRING AND EQUIPMENT ON POLE TO REMAIN AS REQUIRED FOR REUSE AS PART OF NEW WORK. REMOVE LINE VOLTAGE CONDUIT AND CONDUCTORS BACK TO POWER SOURCE. COORDINATE REMOVAL OF POWER TO EQUIPMENT WITH MANUFACTURER (FEDERAL SIGNAL) APPROVED INSTALLER.
ED014	EXISTING OVERHEAD CONDUCTORS TO REMAIN.
ED015	DISCONNECT AND REMOVE EXISTING POLE-MOUNT TRANSFORMER, SAFETY SWITCHES, WEATHERHEADS AND ASSOCIATED APPURTENANCES SERVING RV PEDESTALS. REMOVE EXISTING WOOD POLE AND OVERHEAD PRIMARY AND SITE LIGHTING POWER CONDUCTORS.
ED016	REMOVE EXISTING WOOD POLE AND ASSOCIATED WIRING AND ACCESSORIES.
ED017	MAINTAIN CONTINUITY OF OVERHEAD DISTRIBUTION SERVING BATH HOUSE.
ED018	DISCONNECT AND REMOVE EXISTING SAFETY SWITCHES, WEATHERHEADS AND ASSOCIATED APPURTENANCES SERVING RV PEDESTALS. EXISTING POLE , TRANSFORMER AND OVERHEAD PRIMARY POWER TO REMAIN.
ED019	DISCONNECT AND REMOVE EXISTING SAFETY SWITCHES, WEATHERHEADS AND ASSOCIATED APPURTENANCES SERVING RV PEDESTALS. EXISTING POLE AND OVERHEAD PRIMARY POWER TO REMAIN.

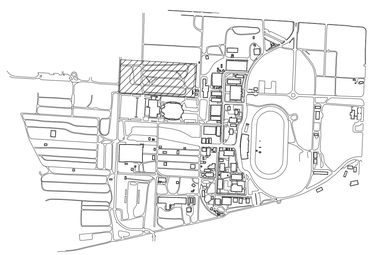

KEY PLAN

STATE OF MISSOURI
MICHAEL L. PARSON,
GOVERNOR

STATE OF MISSOURI
MONICA SANTOYO SANTOS
NUMBER E-2000174546
REGISTERED PROFESSIONAL ENGINEER
8/29/2019

Monica S Santos
MO# E-2000174546

MEP Engineer:

Antella
CONSULTING ENGINEERS INC.

1600 Genessee, Suite 260 Tele 816-421-0950
Kansas City, Missouri 64102 Fax 816-249-2439
email: antella@antella-inc.com

License Name: Antella Consulting Engineers, Inc.
Profession Name: Professional Engineering Corporation
Licensee Number: E-2005013590

Civil Engineer:

SK Design Group, Inc.
Civil Engineers
4600 College Blvd., Suite 100
Overland Park, KS 66211
(913)-451-1818
fax (913)-451-7599
www.skdg.com

License Name: SK Design Group, Inc.
Profession Name: Professional Engineering Corporation
Licensee Number: E-1274-F

OFFICE OF ADMINISTRATION
DIVISION OF FACILITIES MANAGEMENT,
DESIGN AND CONSTRUCTION

DEPARTMENT OF AGRICULTURE

UPGRADE INNER CAMPGROUND UTILITIES

MISSOURI STATE FAIRGROUNDS
2503 W 16TH STREET
SEDALIA, MISSOURI 65301

PROJECT # F1905-01
SITE # 1501
FACILITY # 3511501142

REVISION:
DATE:
REVISION:
DATE:
REVISION:
DATE:
ISSUE DATE: 08/29/2019

CAD DWG FILE:
DRAWN BY: PSJ
CHECKED BY: MSS
DESIGNED BY: PSJ

SHEET TITLE:
ELECTRICAL DEMOLITION PLAN-INNER

SHEET NUMBER:
DE111

SHEET 14 0F 25
08/29/2019

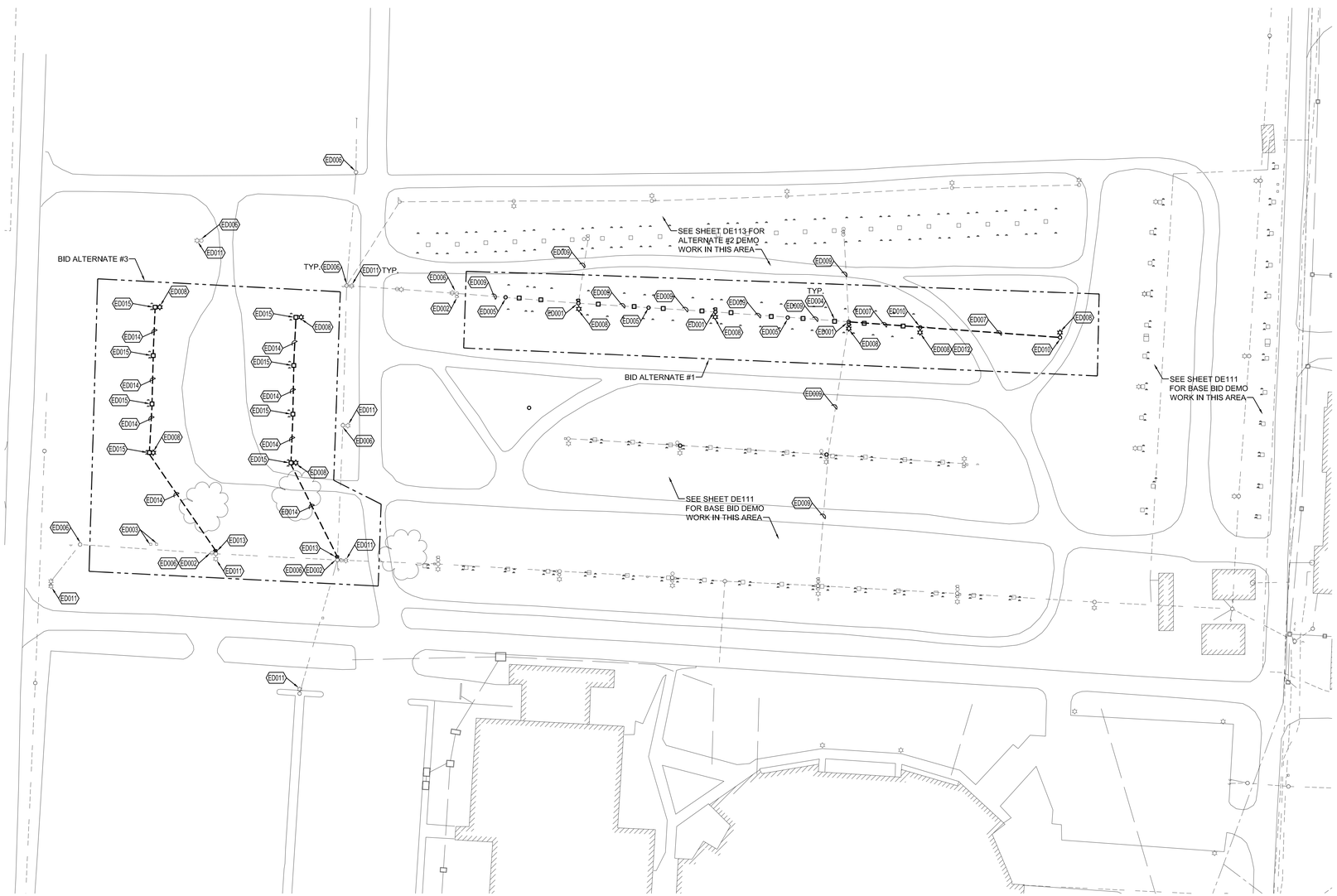

ELECTRICAL DEMOLITION ALTERNATE #1 & #3 PLAN - INNER

NORTH

1"=60'

0 60' 120'

GENERAL DEMO NOTES

1	CONTRACTOR TO FIELD VERIFY EXACT LOCATION OF ALL EXISTING UTILITIES INCLUDING BUT NOT LIMITED TO TELECOM, POWER, WATER AND SEWER.
2	EXISTING UTILITIES, STRUCTURES, PAVEMENT AND ANY OTHER MATERIALS WHICH ARE DAMAGED BY CONTRACTOR SHALL BE REPAIRED OR REPLACED AT THIS CONTRACTOR'S EXPENSE, IN A TIMELY MANNER, AND TO THE ENGINEER'S AND OWNER'S WRITTEN ACCEPTANCE.
3	REFER TO SHEETS DE111 AND DE113 FOR BASE BID AND ALTERNATE #2 WORK.

DEMOLITION PLAN NOTES

ED001	DISCONNECT AND REMOVE EXISTING POLE-MOUNT TRANSFORMER, ASSOCIATED SAFETY SWITCHES, WEATHERHEADS AND ASSOCIATED APPURTENANCES SERVING RV PEDESTALS. EXISTING POLE AND OVERHEAD PRIMARY POWER TO REMAIN.
ED002	EXISTING TRANSFORMER AND ASSOCIATED OVERHEAD CONDUCTORS SERVING AREA LIGHTING TO REMAIN.
ED003	EXISTING TELECOM PEDESTAL AND ASSOCIATED WIRING TO REMAIN. FIELD VERIFY EXACT LOCATIONS.
ED004	DISCONNECT AND REMOVE EXISTING RV PEDESTAL. REMOVE FEEDER CONDUIT AND CONDUCTORS BACK TO DISTRIBUTION PANELBOARD POWER SOURCE. FIELD VERIFY EXISTING ROUTING.
ED005	EXISTING POLE AND OVERHEAD PRIMARY POWER TO REMAIN UNLESS OTHERWISE NOTED.
ED006	EXISTING POLE AND ASSOCIATED OVERHEAD PRIMARY AND SITE LIGHTING POWER TO REMAIN.
ED007	DISCONNECT AND REMOVE EXISTING OVERHEAD CONDUCTORS AND ASSOCIATED POLE ARMS, CUTOUTS AND OTHER APPURTENANCES.
ED008	DISCONNECT AND REMOVE EXISTING AREA LIGHTING LUMINAIRE, SAFETY SWITCH AND ASSOCIATED CONDUIT AND CONDUCTORS INCLUDING OVERHEAD DISTRIBUTION EXCEPT AS REQUIRED TO MAINTAIN CONTINUITY OF CIRCUIT SERVING LUMINAIRES TO REMAIN.
ED009	EXISTING OVERHEAD CONDUCTORS TO REMAIN.
ED010	REMOVE EXISTING WOOD POLE AND ASSOCIATED WIRING AND ACCESSORIES.
ED011	EXISTING AREA LIGHTING LUMINAIRE AND ASSOCIATED WIRING TO REMAIN.
ED012	EXISTING POLE MOUNTED WI-FI, ASSOCIATED CABLING AND ACCESSORIES TO BE REMOVED BY OWNER.
ED013	DISCONNECT AND REMOVE EXISTING SAFETY SWITCH AND ASSOCIATED RISER CONDUIT AND CONDUCTORS SERVING PURVEYOR LOT POWER.
ED014	DISCONNECT AND REMOVE EXISTING UNDERGROUND CONDUIT AND 120/240V FEEDERS BACK TO POLE MOUNTED SAFETY SWITCH POWER SOURCE.
ED015	DISCONNECT AND REMOVE EXISTING WOOD POLE, SAFETY SWITCHES, RECEPTACLES AND ASSOCIATED CONDUIT. REMOVE EXISTING BOLLARDS.

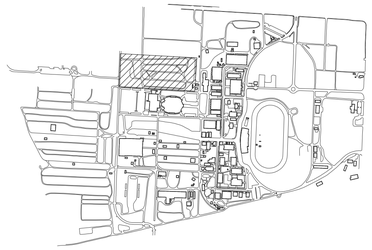

KEY PLAN

STATE OF MISSOURI
MICHAEL L. PARSON,
GOVERNOR

STATE OF MISSOURI
MONICA SANTOYO SANTOS
NUMBER E-2000174546
REGISTERED PROFESSIONAL ENGINEER
8/29/2019

Monica S Santos
MO# E-2000174546

MEP Engineer:

Antella
CONSULTING ENGINEERS INC.

1600 Genessee, Suite 260
Kansas City, Missouri 64102
email: antella@antella-inc.com
Tele 816-421-0950
Fax 816-249-2439

License Name: Antella Consulting Engineers, Inc.
Profession Name: Professional Engineering Corporation
Licensee Number: E-2005013590

Civil Engineer:

SK Design Group, Inc.
Civil Engineers
4600 College Blvd., Suite 100
Overland Park, KS 66211
(913)-451-1818
fax (913)-451-7599
www.skdg.com

License Name: SK Design Group, Inc.
Profession Name: Professional Engineering Corporation
Licensee Number: E-1274-F

OFFICE OF ADMINISTRATION
DIVISION OF FACILITIES MANAGEMENT,
DESIGN AND CONSTRUCTION

DEPARTMENT OF AGRICULTURE

UPGRADE INNER CAMPGROUND UTILITIES

MISSOURI STATE FAIRGROUNDS
2503 W 16TH STREET
SEDALIA, MISSOURI 65301

PROJECT # F1905-01
SITE # 1501
FACILITY # 3511501142

REVISION:
DATE:
REVISION:
DATE:
REVISION:
DATE:
ISSUE DATE: 08/29/2019

CAD DWG FILE:
DRAWN BY: PSJ
CHECKED BY: MSS
DESIGNED BY: PSJ

SHEET TITLE:

ELECTRICAL DEMOLITION ALTERNATE #1 & #3 PLAN-INNER

SHEET NUMBER:

DE112

SHEET 15 0F 25
08/29/2019

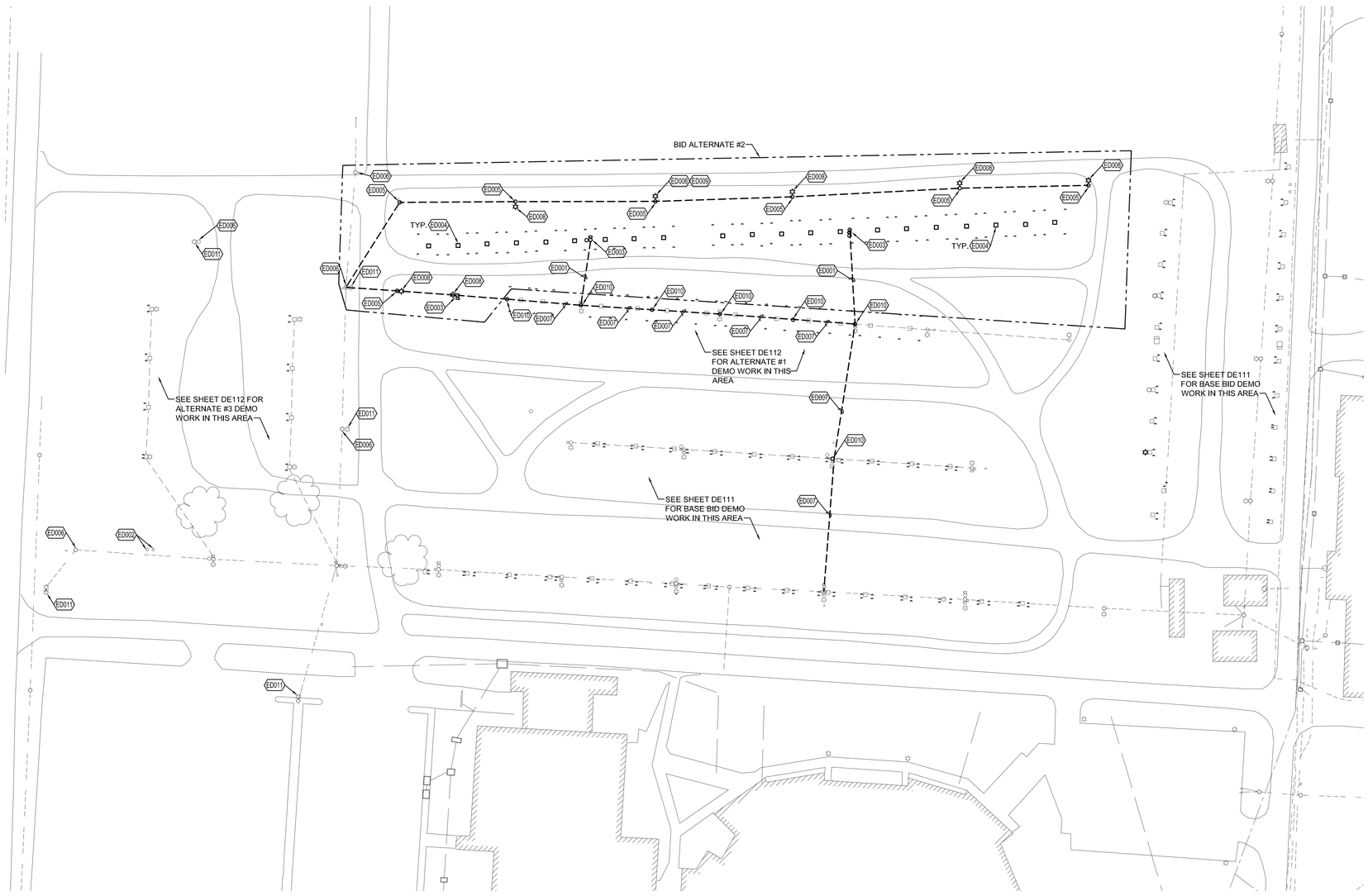

ELECTRICAL DEMOLITION ALTERNATE #2 PLAN - INNER

1"=60'

0 60' 120'

GENERAL DEMO NOTES

1	CONTRACTOR TO FIELD VERIFY EXACT LOCATION OF ALL EXISTING UTILITIES INCLUDING BUT NOT LIMITED TO TELECOM, POWER, WATER AND SEWER.
2	EXISTING UTILITIES, STRUCTURES, PAVEMENT AND ANY OTHER MATERIALS WHICH ARE DAMAGED BY CONTRACTOR SHALL BE REPAIRED OR REPLACED AT THIS CONTRACTOR'S EXPENSE, IN A TIMELY MANNER, AND TO THE ENGINEER'S AND OWNER'S WRITTEN ACCEPTANCE.
3	REFER TO SHEETS DE111 AND DE112 FOR BASE BID, ALTERNATE #1 AND #3 WORK.

DEMOLITION PLAN NOTES

ED001	DISCONNECT AND REMOVE EXISTING OVERHEAD CONDUCTORS AND ASSOCIATED POLE ARMS, CUTOUTS AND OTHER APPURTENANCES.
ED002	EXISTING TELECOM PEDESTAL AND ASSOCIATED WIRING TO REMAIN. FIELD VERIFY EXACT LOCATIONS.
ED003	DISCONNECT AND REMOVE EXISTING POLE-MOUNT TRANSFORMER, SAFETY SWITCHES, WEATHERHEADS, RECEPTACLES AND ASSOCIATED APPURTENANCES SERVING RV PEDESTALS. REMOVE EXISTING WOOD POLE AND OVERHEAD PRIMARY AND SITE LIGHTING POWER CONDUCTORS.
ED004	DISCONNECT AND REMOVE EXISTING RV PEDESTAL. REMOVE FEEDER CONDUIT AND CONDUCTORS BACK TO DISTRIBUTION PANELBOARD POWER SOURCE. FIELD VERIFY EXISTING ROUTING.
ED005	REMOVE EXISTING WOOD POLE AND ASSOCIATED WIRING AND ACCESSORIES.
ED006	EXISTING POLE AND ASSOCIATED OVERHEAD PRIMARY AND SITE LIGHTING POWER TO REMAIN.
ED007	ALTERNATE #2 AND #3 ONLY: DISCONNECT AND REMOVE EXISTING OVERHEAD CONDUCTORS AND ASSOCIATED POLE ARMS, CUTOUTS AND OTHER APPURTENANCES.
ED008	DISCONNECT AND REMOVE EXISTING AREA LIGHTING LUMINAIRE, SAFETY SWITCH AND ASSOCIATED CONDUIT AND CONDUCTORS INCLUDING OVERHEAD DISTRIBUTION EXCEPT AS REQUIRED TO MAINTAIN CONTINUITY OF CIRCUIT SERVING LUMINAIRES TO REMAIN.
ED009	EXISTING POLE MOUNTED WI-FI, ASSOCIATED CABLING AND ACCESSORIES TO BE REMOVED BY OWNER.
ED010	ALTERNATE #2 AND #3 ONLY: DISCONNECT AND REMOVE EXISTING WOOD POLE AND ASSOCIATED APPURTENANCES.
ED011	EXISTING AREA LIGHTING LUMINAIRE AND ASSOCIATED WIRING TO REMAIN.

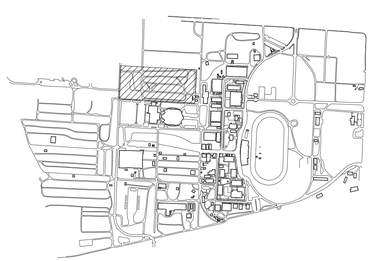

KEY PLAN

STATE OF MISSOURI
MICHAEL L. PARSON,
GOVERNOR

STATE OF MISSOURI
MONICA SANTOYO SANTOS
NUMBER E-2000174546
REGISTERED PROFESSIONAL ENGINEER
8/29/2019

Monica S Santos
MO# E-2000174546

MEP Engineer:
Antella
CONSULTING ENGINEERS INC.
1600 Genessee, Suite 260 Tele 816-421-0950
Kansas City, Missouri 64102 Fax 816-249-2439
email: antella@antella-inc.com
License Name: Antella Consulting Engineers, Inc.
Profession Name: Professional Engineering Corporation
Licensee Number: E-2005013590

Civil Engineer:
SK Design Group, Inc.
Civil Engineers
4600 College Blvd., Suite 100
Overland Park, KS 66211
(913)-451-1818
fax (913)-451-7599
www.skdg.com
License Name: SK Design Group, Inc.
Profession Name: Professional Engineering Corporation
Licensee Number: E-1274-F

OFFICE OF ADMINISTRATION
DIVISION OF FACILITIES MANAGEMENT,
DESIGN AND CONSTRUCTION

DEPARTMENT OF AGRICULTURE

UPGRADE INNER CAMPGROUND UTILITIES

MISSOURI STATE FAIRGROUNDS
2503 W 16TH STREET
SEDALIA, MISSOURI 65301

PROJECT # F1905-01
SITE # 1501
FACILITY # 3511501142

REVISION:
DATE:
REVISION:
DATE:
REVISION:
DATE:
ISSUE DATE: 08/29/2019

CAD DWG FILE:
DRAWN BY: PSJ
CHECKED BY: MSS
DESIGNED BY: PSJ

SHEET TITLE:
ELECTRICAL DEMOLITION ALTERNATE #2 PLAN-INNER

SHEET NUMBER:
DE113

SHEET 16 OF 25
08/29/2019

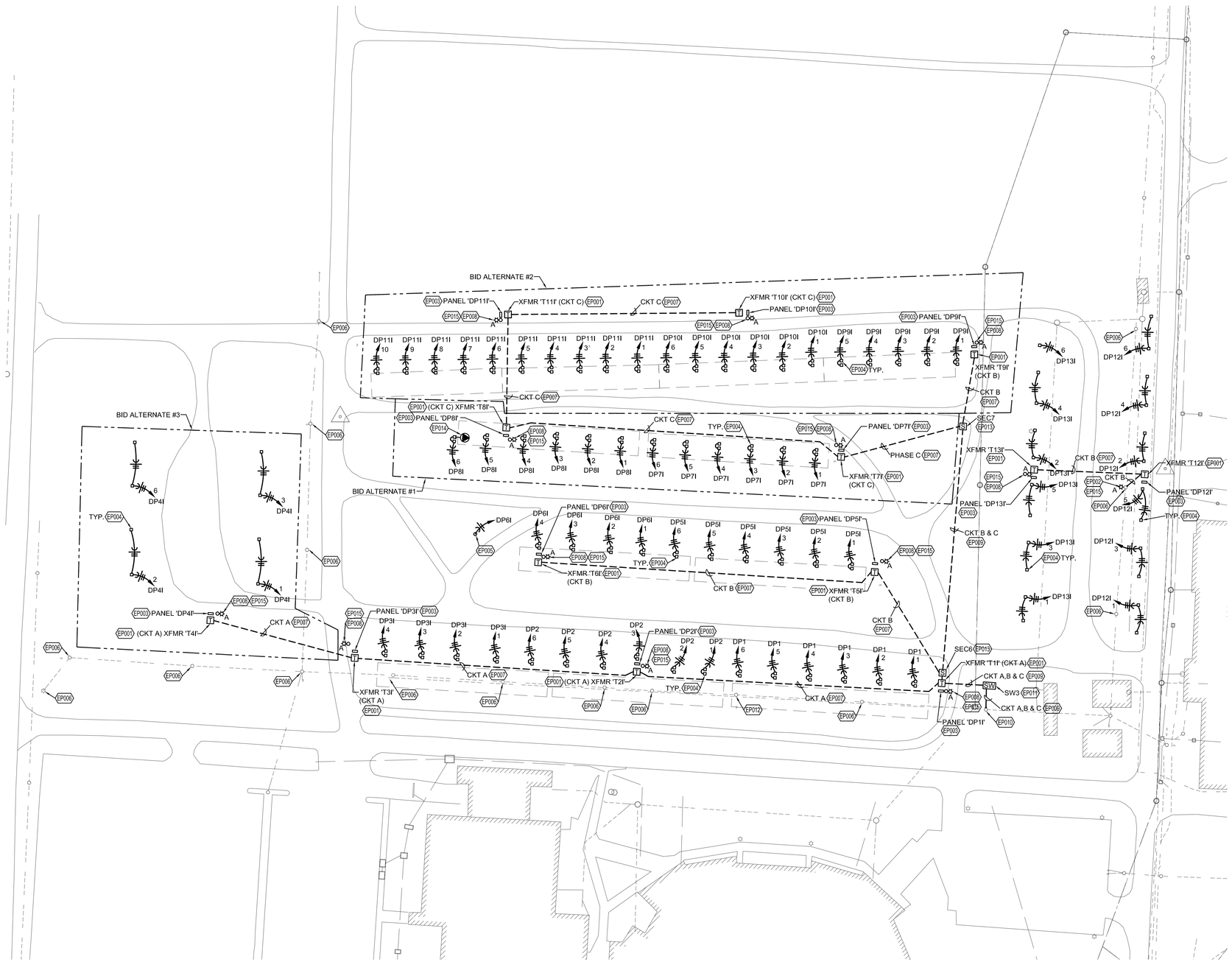

ELECTRICAL SITE PLAN - INNER

1"=60'

0 60' 120'

GENERAL NOTES

1	CIRCUIT ROUTING SHOWN IS DIAGRAMMATIC ONLY.
2	CONTRACTOR TO FIELD LOCATE, MAINTAIN AND PROTECT ALL EXISTING UTILITIES UNLESS OTHERWISE NOTED.

NEW WORK PLAN NOTES

EP001	PROVIDE NEW 250 KVA, 7200Y-240/120, SINGLE PHASE PAD MOUNT TRANSFORMER.
EP002	PROVIDE NEW LIGHT FIXTURE ON EXISTING WOOD POLE.
EP003	PROVIDE NEW 240/120V PANELBOARD IN NEMA 3R ENCLOSURE MOUNTED ON GALVANIZED UNI-STRUT FRAME. SEE ASSOCIATED PANEL SCHEDULE AND RISER DIAGRAM FOR ADDITIONAL INFORMATION AND REQUIREMENTS.
EP004	DOUBLE-SIDED RV ELECTRIC PEDESTAL. SEE ELECTRICAL RISER DIAGRAM, SHEET E812 FOR ADDITIONAL INFORMATION AND REQUIREMENTS.
EP005	PROVIDE (2) #12 & (1) #12 GROUND IN 3/4" CONDUIT AND RECONNECT TO EXISTING TORNADO SIREN EQUIPMENT TO REMAIN. COORDINATE FINAL ELECTRICAL CONNECTIONS AND RE-ENERGIZATION OF EQUIPMENT WITH MANUFACTURER (FEDERAL SIGNAL) APPROVED INSTALLER.
EP006	EXISTING POLE, ASSOCIATED OVERHEAD AND UNDERGROUND DISTRIBUTION TO REMAIN.
EP007	SINGLE PHASE, MEDIUM VOLTAGE CIRCUIT BELOW GRADE. SHEET SHEET E811 FOR ADDITIONAL INFORMATION.
EP008	PROVIDE NEW 35' CLASS 3 WOOD POLE AND LUMINAIRE. PROVIDE (2) #12 & (1) #12 GROUND IN 3/4" CONDUIT FROM 20A, 1 POLE BREAKER IN NEAREST PANELBOARD. SEE PANELBOARD SCHEDULES FOR ADDITIONAL INFORMATION.
EP009	THREE PHASE, MEDIUM VOLTAGE CIRCUIT BELOW GRADE. SHEET SHEET E811 FOR ADDITIONAL INFORMATION.
EP010	MODIFY EXISTING POLE ARMS TO SUPPORT ONE (1) 200A, 3 PHASE FUSED CUTOUT (FUSE AT 200A). PROVIDE CONDUIT RISER TO BELOW GRADE FOR FEEDING OF SECTIONALIZER SWITCH NOTED. SEE SHEET E811 FOR ADDITIONAL INFORMATION.
EP011	PROVIDE NEW PAD-MOUNTED, 15 KV SECTIONALIZER SWITCH (BASIS OF DESIGN: S&C PME-5 OR APPROVED EQUAL). SEE SPECIFICATIONS AND RISER DIAGRAMS FOR ADDITIONAL INFORMATION.
EP012	ALTERNATE #2 AND #3 ONLY: REMOVE EXISTING FUSED CUTOUT, REPLACE WITH COMBINATION ARRESTER/200A FUSIBLE CUTOUT AND RECONNECT TO EXISTING TRANSFORMER SERVING BATH HOUSE. MAINTAIN CODE REQUIRED CLEARANCES. PROVIDE ALL REQUIRED ACCESSORIES, EQUIPMENT AND CONNECTIONS AS REQUIRED FOR A COMPLETE INSTALLATION.
EP013	PROVIDE 15 KV, 200A, 3 PHASE, SECTIONALIZING CABINET WITH FIBERGLASS GROUND SLEEVES AS REQUIRED FOR ON-GRADE MOUNTING. SEE SPECIFICATIONS FOR ADDITIONAL INFORMATION.
EP014	PROVIDE NEMA 10-50R RECEPTACLE IN WEATHERPROOF ENCLOSURE. PROVIDE (3) # 6 & (1) #10 GND IN 1" CONDUIT MIN. 24" BELOW GRADE TO ASSOCIATED BREAKER IN PANEL DP8I.
EP015	PROVIDE (2) #12 & (1) #12 GROUND IN 3/4" CONDUIT FROM NEAREST PANELBOARD TO WEATHERPROOF JUNCTION BOX MOUNTED 5' ABOVE GRADE ON POLE FOR OWNER WI-FI BY OTHERS. WIRENUT AND TAPE CONDUCTORS FOR FUTURE EXTENSION. SEE PANELBOARD SCHEDULES FOR ADDITIONAL INFORMATION.

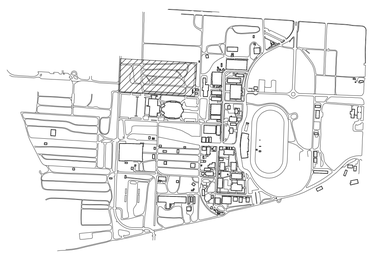

KEY PLAN

STATE OF MISSOURI
MICHAEL L. PARSON,
GOVERNOR

STATE OF MISSOURI
MONICA SANTOYO SANTOS
NUMBER E-2000174546
REGISTERED PROFESSIONAL ENGINEER
8/29/2019

Monica S Santos
MO# E-2000174546

MEP Engineer:
Antella
CONSULTING ENGINEERS INC.
1600 Genessee, Suite 260
Kansas City, Missouri 64102
email: antella@antella-inc.com
Tele 816-421-0950
Fax 816-249-2439
License Name: Antella Consulting Engineers, Inc.
Profession Name: Professional Engineering Corporation
Licensee Number: E-2005013590

Civil Engineer:
SK Design Group, Inc.
Civil Engineers
4600 College Blvd., Suite 100
Overland Park, KS 66211
(913)-451-1818
fax (913)-451-7599
www.skdg.com
License Name: SK Design Group, Inc.
Profession Name: Professional Engineering Corporation
Licensee Number: E-1274-F

OFFICE OF ADMINISTRATION
DIVISION OF FACILITIES MANAGEMENT,
DESIGN AND CONSTRUCTION

DEPARTMENT OF AGRICULTURE

UPGRADE INNER CAMPGROUND UTILITIES

MISSOURI STATE FAIRGROUNDS
2503 W 16TH STREET
SEDALIA, MISSOURI 65301

PROJECT # F1905-01
SITE # 1501
FACILITY # 3511501142

REVISION:
DATE:
REVISION:
DATE:
REVISION:
DATE:
ISSUE DATE: 08/29/2019

CAD DWG FILE:
DRAWN BY: PSJ
CHECKED BY: MSS
DESIGNED BY: PSJ

SHEET TITLE:
ELECTRICAL SITE PLAN- INNER

SHEET NUMBER:
E111

SHEET 17 0F 25
08/29/2019

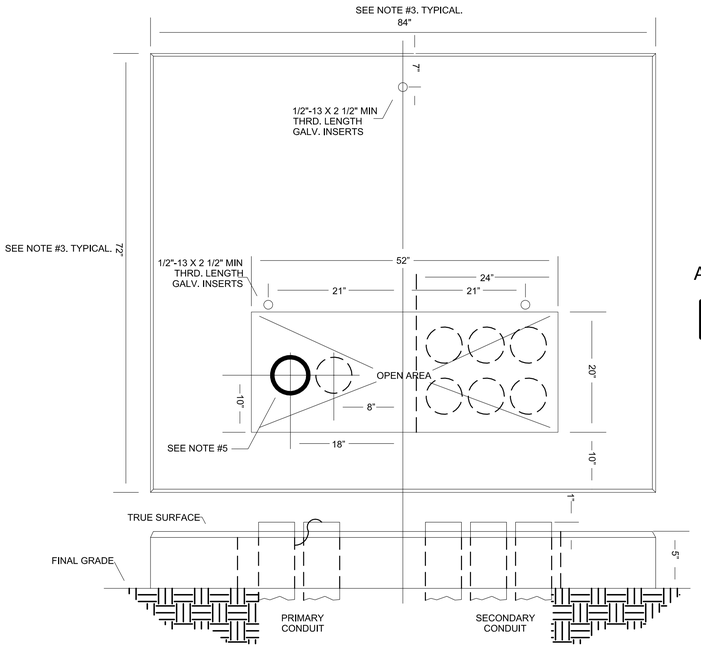

GENERAL NOTES

1. ALL CONDUIT SHALL BE SCHEDULE 40 PVC.

2. SECONDARY CONDUIT SHALL BE SYMMETRICALLY LOCATED WITHIN SECONDARY OPENING AREA.

3. DIMENSIONS SHOWN ARE FOR REFERENCE ONLY. PAD TO EXTEND OUT FROM EDGE OF TRANSFORMER EQUIPMENT MINIMUM OF 18" ON ALL SIDES. FIELD VERIFY EXACT DIMENSIONS REQUIRED PER ACTUAL UNIT INSTALLED.

4. PROPER COMPACTION OF BACKFILL IS IMPORTANT TO PREVENT SETTLING. BACK FILL WITH LIMESTONE SCREENINGS, 24" MINIMUM THICKNESS BELOW GRADE.

5. FOR RADIAL FED TRANSFORMERS, INSTALL THE PRIMARY CONDUIT IN THE LEFT POSITION (SHOWN AS A SOLID CIRCLE).

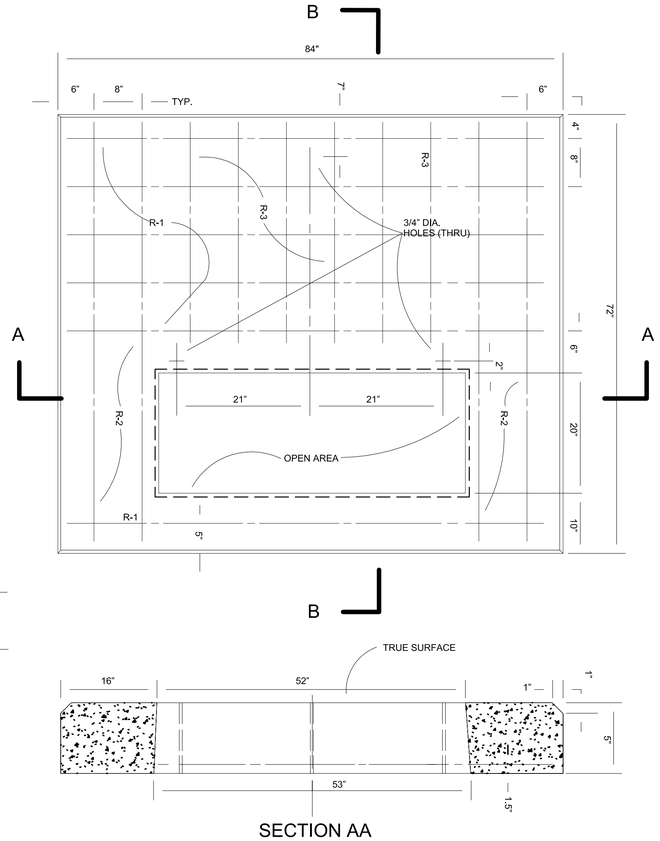

SECTION AA

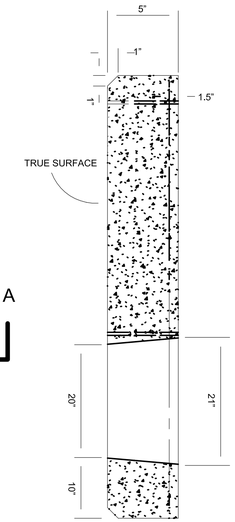

SECTION BB

REINFORCING SCHEDULE

MARK	NO.REQ.	SIZE	LEGNTH
R-1	6	#4	6'-6"
R-2	4	#4	5'-6"
R-3	5	#4	3'-0"

4 TRANSFORMER PAD DETAIL
NO SCALE

KEYED NOTES:

1. #4/0 BARE COPPER GROUND CONDUCTOR AT DEPTH OF 24" BELOW GRADE. (TYP.)
2. EXOTHERMIC WELD (TYP.).
3. 3/4" BY 10' COPPER-CLAD STEEL DRIVEN GROUND ROD. CONNECT GROUND CONDUCTOR TO GROUND ROD WITH EXOTHERMIC WELD. (TYP.)
4. #4/0 BARE COPPER GROUND CONDUCTOR BONDED TO SWITCH COMPARTMENT GROUND BUS BAR.
5. #4/0 BARE COPPER GROUND CONDUCTOR BONDED TO FUSE COMPARTMENT GROUND BUS BAR.

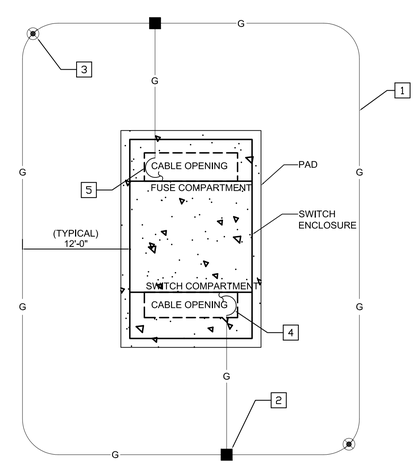

1 PAD MOUNTED SWITCHGEAR - GROUNDING
NO SCALE

KEYED NOTES:

1. #4/0 BARE COPPER GROUND CONDUCTOR AT DEPTH OF 24" BELOW GRADE. (TYP.)
2. EXOTHERMIC WELD (TYP.).
3. 3/4" BY 10' COPPER-CLAD STEEL DRIVEN GROUND ROD. CONNECT GROUND CONDUCTOR TO GROUND ROD WITH EXOTHERMIC WELD. (TYP.)
4. #4/0 BARE COPPER GROUND CONDUCTOR BONDED TO TRANSFORMER ENCLOSURE.

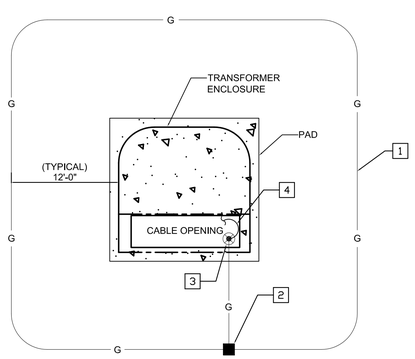

2 PAD MOUNTED TRANSFORMER - GROUNDING
NO SCALE

KEYED NOTES:

1. #4/0 BARE COPPER GROUND CONDUCTOR AT DEPTH OF 24" BELOW GRADE. (TYP.)
2. EXOTHERMIC WELD (TYP.).
3. 3/4" BY 10' COPPER-CLAD STEEL DRIVEN GROUND ROD. CONNECT GROUND CONDUCTOR TO GROUND ROD WITH EXOTHERMIC WELD. (TYP.)
4. #4/0 BARE COPPER GROUND CONDUCTOR BONDED TO SECTIONALIZING CABINET ENCLOSURE.

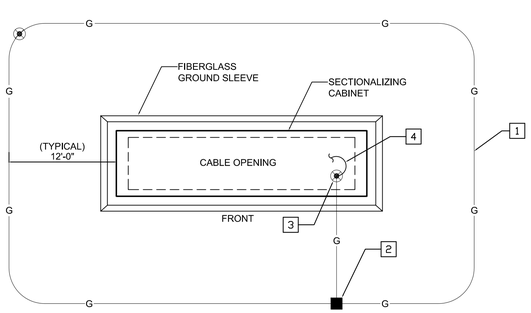

3 SECTIONALIZER CABINET- GROUNDING
NO SCALE

STATE OF MISSOURI
MICHAEL L. PARSON,
GOVERNOR

STATE OF MISSOURI
MONICA SANTOYO SANTOS
NUMBER
E-2000174546
REGISTERED PROFESSIONAL ENGINEER
8/29/2019

Monica S Santos
MO# E-2000174546
MEP Engineer:

Antella
CONSULTING ENGINEERS INC.

1600 Genessee, Suite 260
Kansas City, Missouri 64102
email: antella@antella-inc.com
Tele 816-421-0950
Fax 816-249-2439

License Name: Antella Consulting Engineers, Inc.
Profession Name: Professional Engineering Corporation
Licensee Number: E-2005013590

Civil Engineer:

SK Design Group, Inc.
Civil Engineers
4600 College Blvd., Suite 100
Overland Park, KS 66211
(913)-451-1818
fax (913)-451-7599
www.skdg.com

License Name: SK Design Group, Inc.
Profession Name: Professional Engineering Corporation
Licensee Number: E-1274-F

OFFICE OF ADMINISTRATIO
DIVISION OF FACILITIES
MANAGEMENT,
DESIGN AND CONSTRUCTIO

DEPARTMENT OF
AGRICULTURE

UPGRADE INNER
CAMPGROUND UTILITIES

MISSOURI STATE
FAIRGROUNDS
2503 W 16TH STREET
SEDALIA, MISSOURI 65301

PROJECT # F1905-01
SITE # 1501
FACILITY # 3511501142

REVISION:
DATE:
REVISION:
DATE:
REVISION:
DATE:
ISSUE DATE: 08/29/2019

CAD DWG FILE:
DRAWN BY: PSJ
CHECKED BY: MSS
DESIGNED BY: PSJ

SHEET TITLE:
ELECTRICAL
DETAILS

SHEET NUMBER:
E511

SHEET 18 0F 25
08/29/2019

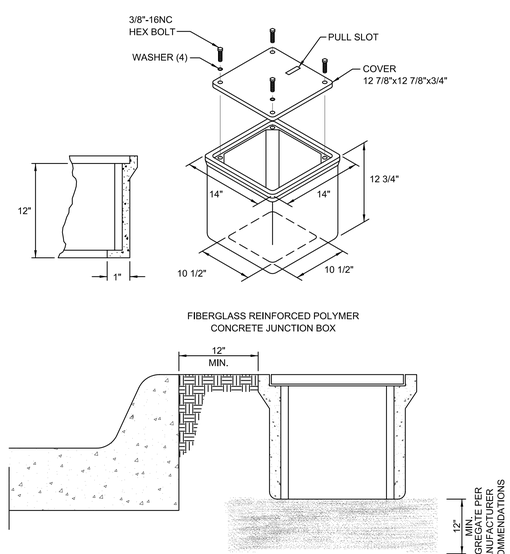

3 600V JUNCTION BOX DETAIL
NO SCALE

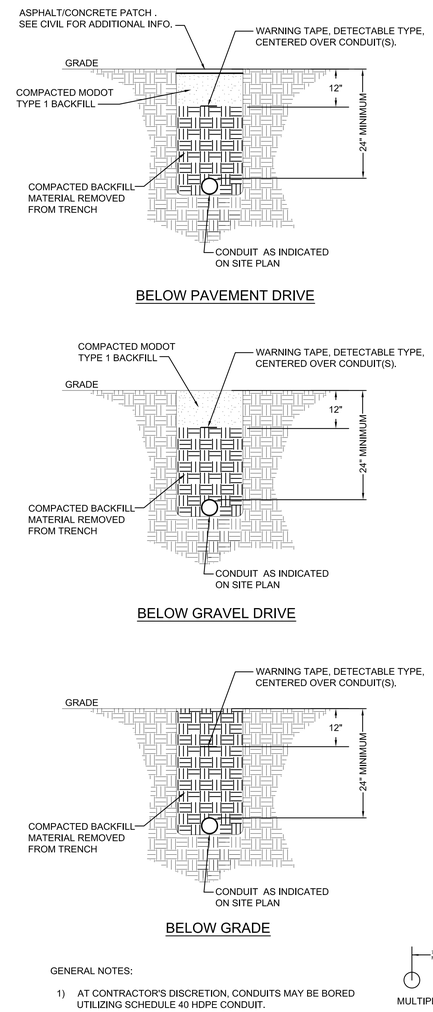

2 600V CONDUIT TRENCH DETAILS
NO SCALE

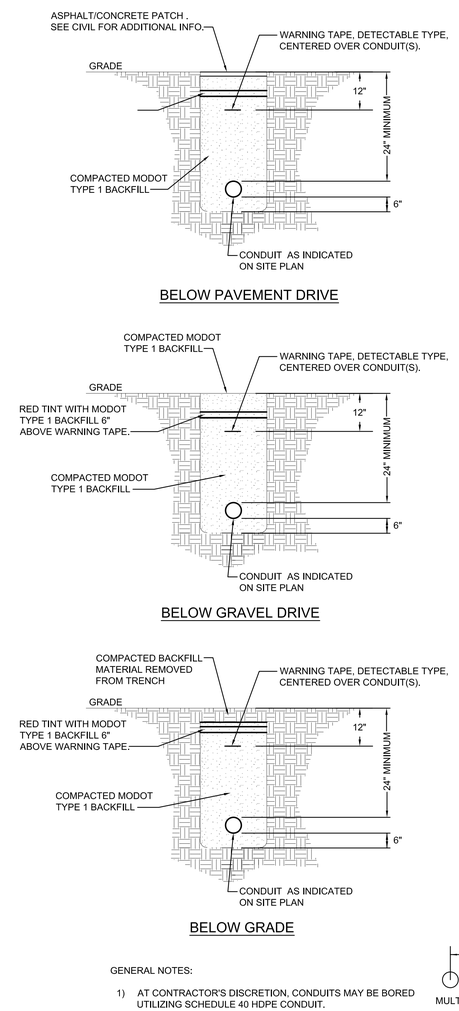

1 15KV CONDUIT TRENCH DETAILS
NO SCALE

STATE OF MISSOURI
MICHAEL L. PARSON,
GOVERNOR

STATE OF MISSOURI
MONICA SANTOYO SANTOS
NUMBER
E-2000174546
REGISTERED PROFESSIONAL ENGINEER
8/29/2019

Monica S Santos
MO# E-2000174546

MEP Engineer:

Antella
CONSULTING ENGINEERS INC.

1600 Genessee, Suite 260
Kansas City, Missouri 64102
email: antella@antella-inc.com
Tele 816-421-0950
Fax 816-249-2439

License Name: Antella Consulting Engineers, Inc.
Profession Name: Professional Engineering Corporation
Licensee Number: E-2005013590

Civil Engineer:

SK Design Group, Inc.
Civil Engineers
4600 College Blvd., Suite 100
Overland Park, KS 66211
(913)-451-1818
fax (913)-451-7599
www.skdg.com

License Name: SK Design Group, Inc.
Profession Name: Professional Engineering Corporation
Licensee Number: E-1274-F

OFFICE OF ADMINISTRATIO
DIVISION OF FACILITIES
MANAGEMENT,
DESIGN AND CONSTRUCTIO

DEPARTMENT OF
AGRICULTURE

UPGRADE INNER
CAMPGROUND UTILITIES

MISSOURI STATE
FAIRGROUNDS
2503 W 16TH STREET
SEDALIA, MISSOURI 65301

PROJECT # F1905-01
SITE # 1501
FACILITY # 3511501142

REVISION:
DATE:
REVISION:
DATE:
REVISION:
DATE:
ISSUE DATE: 08/29/2019

CAD DWG FILE:
DRAWN BY: PSJ
CHECKED BY: MSS
DESIGNED BY: PSJ

SHEET TITLE:
ELECTRICAL
DETAILS

SHEET NUMBER:
E512

SHEET 19 0F 25
08/29/2019

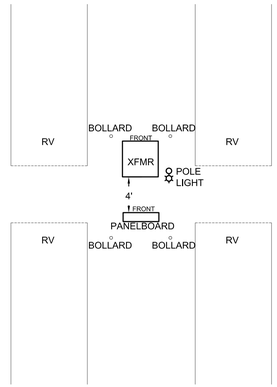

TYPICAL TRANSFORMER - STANDALONE

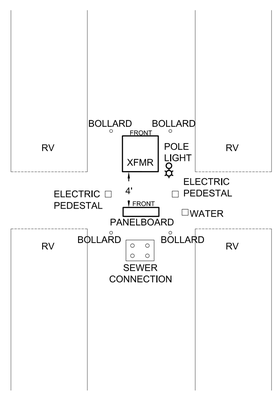

TYPICAL LAYOUT WITH TRANSFORMER

GENERAL NOTE: MINIMUM 36" CLEARANCE IN FRONT AND BACK OF ELECTRIC PEDESTAL EQUIPMENT.

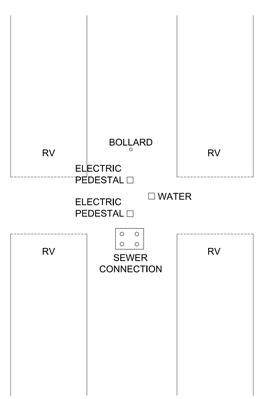

TYPICAL LAYOUT

GENERAL NOTE: MINIMUM 36" CLEARANCE IN FRONT AND BACK OF ELECTRIC PEDESTAL EQUIPMENT.

2 TYPICAL UTILITY SERVICES LAYOUT

NO SCALE

GENERAL NOTES

1	PROVIDE ALL WORK AS REQUIRED TO MEET INTENT OF WORK SHOWN. MAINTAIN CLEARANCES PER NESC RECOMMENDATIONS AND MEET LATEST USDA RURAL UTILITIES SERVICE STANDARD REQUIREMENTS.
2	MODIFY EXISTING STRUCTURES, CONDUCTORS, ETC. AS REQUIRED TO ACCOMMODATE NEW WORK SHOWN.

DETAIL NOTES

EP001	PROVIDE 4" RIGID GALVANIZED RISER CONDUIT WITH STANDOFFS AS REQUIRED.
EP002	EXISTING NEUTRAL. MAINTAIN CONTINUITY AND EXISTING CONNECTIONS. MODIFY HEIGHT AS REQUIRED FOR CLEARANCES.
EP003	EXISTING 240V SECONDARY CONDUCTORS. MAINTAIN CONTINUITY AND EXISTING CONNECTIONS. MODIFY HEIGHT AS REQUIRED FOR CLEARANCES.

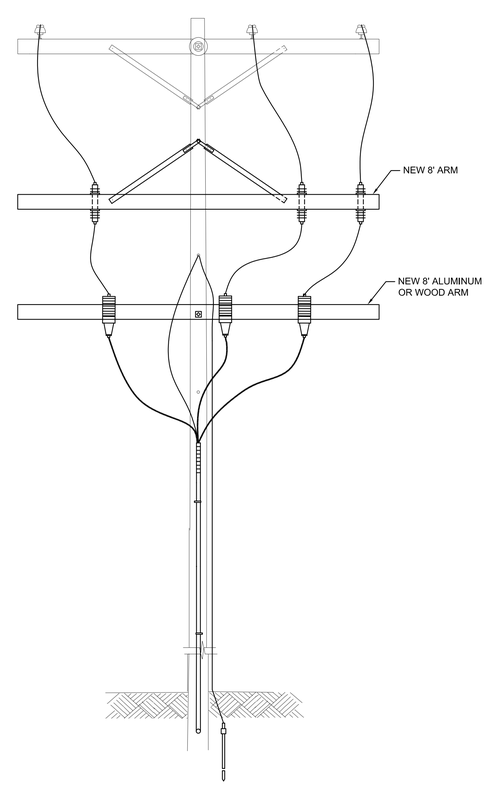

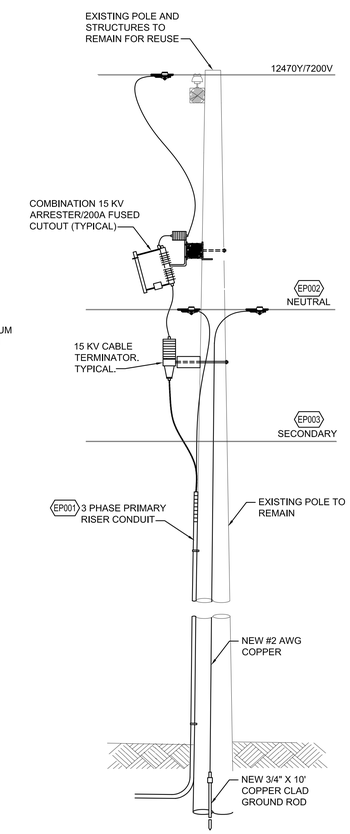

1 POLE DETAIL - INNER

NO SCALE

STATE OF MISSOURI
MICHAEL L. PARSON, GOVERNOR

STATE OF MISSOURI
MONICA SANTOYO SANTOS
NUMBER E-2000174546
REGISTERED PROFESSIONAL ENGINEER
8/29/2019

Monica S Santos
MO# E-2000174546

MEP Engineer:

Antella
CONSULTING ENGINEERS INC.

1600 Genessee, Suite 260
Kansas City, Missouri 64102
email: antella@antella-inc.com
Tele 816-421-0950
Fax 816-249-2439

License Name: Antella Consulting Engineers, Inc.
Profession Name: Professional Engineering Corporation
Licensee Number: E-2005013590

Civil Engineer:

SK Design Group, Inc.
Civil Engineers
4600 College Blvd., Suite 100
Overland Park, KS 66211
(913)-451-1818
fax (913)-451-7599
www.skdg.com

License Name: SK Design Group, Inc.
Profession Name: Professional Engineering Corporation
Licensee Number: E-1274-F

OFFICE OF ADMINISTRATIO
DIVISION OF FACILITIES MANAGEMENT,
DESIGN AND CONSTRUCTIO

DEPARTMENT OF AGRICULTURE

UPGRADE INNER CAMPGROUND UTILITIES

MISSOURI STATE FAIRGROUNDS
2503 W 16TH STREET
SEDALIA, MISSOURI 65301

PROJECT # F1905-01
SITE # 1501
FACILITY # 3511501142

REVISION:
DATE:
REVISION:
DATE:
REVISION:
DATE:
ISSUE DATE: 08/29/2019

CAD DWG FILE:
DRAWN BY: PSJ
CHECKED BY: MSS
DESIGNED BY: PSJ

SHEET TITLE:

ELECTRICAL DETAILS

SHEET NUMBER:

E513

SHEET 20 0F 25
08/29/2019

PANELBOARD DP6I SCHEDULE

SERVICE: 240/120 VOLT , 1 - PHASE , 3 - WIRE
AMP: 1200 AMP
MAINS: MCB / 1200 AMP MAIN BREAKER

BUS: COPPER, S/N ,GND BUS
MOUNTING: SURFACE

RATING: 42000 A.I.C.
LOCATION: INNER CAMP
WEST - MIDDLE

REV NO.	NOTE NO.	LOAD CRT#	LOAD DESCRIPTION	BRKR P	BRKR AMP	LOAD KVA A	LOAD KVA B	LOAD CRT#	LOAD DESCRIPTION	BRKR P	BRKR AMP	LOAD KVA A	LOAD KVA B	NOTE NO.	REV NO.
		1	SITES 139, 140, 159, 160	2	250	24		2	SITES 149, 150, 169, 170	2	250	24			
							24						24		
		3	SITES 137, 138, 157, 158	2	250	24		4	SITES 135, 136, 155, 156	2	250	24			
							24						24		
		5	BID ALT. 3: EAST	2	250	24		6	BID ALT. 3: WEST	2	250	24			
							24						24		
		7	POLE LIGHT	1	20	0.2		8	EXISTING TORNADO SIREN	1	20	1			
		9	SPARE	1	20			10	SPARE	1	20				
		11	SPARE	1	20			12	J-BOX - OWNER WIFI	1	20	0.1			
		13	SPARE	1	20			14	SPARE	1	20				
		15	SPARE	1	20			16	SPARE	1	20				
		17	SPARE	1	20			18	SPARE	1	20				
		19	SPARE	1	20			20	SPARE	1	20				
						TOTAL:	72.2	72				TOTAL:	73.1	72	
													72.2	72	
												KVA / PHASE TOTAL:	145.3	144	
												AMP / PHASE TOTAL:	1211	1200	

NOTES:
PANELBOARD ENCLOSURE TO BE NEMA 3R.
MAIN BREAKER TO BE PROVIDED WITH REDUCED ENERGY LET-THRU MAINTENANCE SWITCH

TOTAL CONNECTED LOAD: 289.30 KVA
TOTAL CONNECTED CURRENT: 1205.42 AMPS
TOTAL DEMAND CURRENT: 1205.63 AMPS

PANELBOARD DP5I SCHEDULE

SERVICE: 240/120 VOLT , 1 - PHASE , 3 - WIRE
AMP: 1200 AMP
MAINS: MCB / 1200 AMP MAIN BREAKER

BUS: COPPER, S/N ,GND BUS
MOUNTING: SURFACE

RATING: 42000 A.I.C.
LOCATION: INNER CAMP
EAST - MIDDLE

REV NO.	NOTE NO.	LOAD CRT#	LOAD DESCRIPTION	BRKR P	BRKR AMP	LOAD KVA A	LOAD KVA B	LOAD CRT#	LOAD DESCRIPTION	BRKR P	BRKR AMP	LOAD KVA A	LOAD KVA B	NOTE NO.	REV NO.
		1	SITES 151, 152, 171, 172	2	250	24		2	SITES 149, 150, 169, 170	2	250	24			
							24						24		
		3	SITES 147, 148, 167, 168	2	250	24		4	SITES 145, 146, 165, 166	2	250	24			
							24						24		
		5	SITES 143, 144, 163, 164	2	250	24		6	SITES 141, 142, 161, 162	2	250	24			
							24						24		
		7	POLE LIGHT	1	20	0.2		8	J-BOX - OWNER WIFI	1	20	0.1			
		9	SPARE	1	20			10	SPARE	1	20				
		11	SPARE	1	20			12	SPARE	1	20				
		13	SPARE	1	20			14	SPARE	1	20				
		15	SPARE	1	20			16	SPARE	1	20				
		17	SPARE	1	20			18	SPARE	1	20				
		19	SPARE	1	20			20	SPARE	1	20				
						TOTAL:	72.2	72				TOTAL:	72.1	72	
													72.2	72	
												KVA / PHASE TOTAL:	144.3	144	
												AMP / PHASE TOTAL:	1203	1200	

NOTES:
PANELBOARD ENCLOSURE TO BE NEMA 3R.
MAIN BREAKER TO BE PROVIDED WITH REDUCED ENERGY LET-THRU MAINTENANCE SWITCH

TOTAL CONNECTED LOAD: 288.30 KVA
TOTAL CONNECTED CURRENT: 1201.25 AMPS
TOTAL DEMAND CURRENT: 1201.46 AMPS

BID ALTERNATE #3

PANELBOARD DP4I SCHEDULE

SERVICE: 240/120 VOLT , 1 - PHASE , 3 - WIRE
AMP: 1000 AMP
MAINS: MCB / 1000 AMP MAIN BREAKER

BUS: COPPER, S/N ,GND BUS
MOUNTING: SURFACE

RATING: 42000 A.I.C.
LOCATION: PURVEYORS
LOT - SOUTHWEST

REV NO.	NOTE NO.	LOAD CRT#	LOAD DESCRIPTION	BRKR P	BRKR AMP	LOAD KVA A	LOAD KVA B	LOAD CRT#	LOAD DESCRIPTION	BRKR P	BRKR AMP	LOAD KVA A	LOAD KVA B	NOTE NO.	REV NO.
		1	PURVEYOR SITES - SOUTHEAST	2	250	24		2	PURVEYOR SITES - SOUTHWEST	2	250	24			
							24						24		
		3	PURVEYOR SITES - NORTHEAST	2	250	24		4	PURVEYOR SITES - NORTHWEST	2	250	24			
							24						24		
		5	POLE LIGHT	1	20	0.2		6	J-BOX - OWNER WIFI	1	20	0.1			
		7	SPARE	1	20			8	SPARE	1	20				
		9	SPARE	1	20			10	SPARE	1	20				
		11	SPARE	1	20			12	SPARE	1	20				
		13	SPARE	1	20			14	SPARE	1	20				
		15	SPARE	1	20			16	SPARE	1	20				
		17	SPARE	1	20			18	SPARE	1	20				
		19	SPARE	1	20			20	SPARE	1	20				
						TOTAL:	48.2	48				TOTAL:	48.1	48	
													48.2	48	
												KVA / PHASE TOTAL:	96.3	96	
												AMP / PHASE TOTAL:	803	800	

NOTES:
PANELBOARD ENCLOSURE TO BE NEMA 3R.

TOTAL CONNECTED LOAD: 192.30 KVA
TOTAL CONNECTED CURRENT: 801.25 AMPS
TOTAL DEMAND CURRENT: 801.46 AMPS

PANELBOARD DP3I SCHEDULE

SERVICE: 240/120 VOLT , 1 - PHASE , 3 - WIRE
AMP: 1200 AMP
MAINS: MCB / 1200 AMP MAIN BREAKER

BUS: COPPER, S/N ,GND BUS
MOUNTING: SURFACE

RATING: 42000 A.I.C.
LOCATION: INNER CAMP
SOUTHWEST

REV NO.	NOTE NO.	LOAD CRT#	LOAD DESCRIPTION	BRKR P	BRKR AMP	LOAD KVA A	LOAD KVA B	LOAD CRT#	LOAD DESCRIPTION	BRKR P	BRKR AMP	LOAD KVA A	LOAD KVA B	NOTE NO.	REV NO.
		1	SITES 179, 180, 211, 212	2	250	24		2	SITES 177, 178, 209, 210	2	250	24			
							24						24		
		3	SITES 175, 176, 207, 208	2	250	24		4	SITES 173, 174, 205, 206	2	250	24			
							24						24		
		5	BID ALT. 3: NORTH, EAST	2	250	24		6	BID ALT. 3: NORTH, MIDDLE	2	250	24			
							24						24		
		7	BID ALT. 3: NORTH, WEST - SINGLE	2	125	12		8	SPARE	2	125				
							12								
		9	POLE LIGHT	1	20	0.2		10	J-BOX - OWNER WIFI	1	20	0.1			
		11	SPARE	1	20			12	SPARE	1	20				
		13	SPARE	1	20			14	SPARE	1	20				
		15	SPARE	1	20			16	SPARE	1	20				
						TOTAL:	84.2	84				TOTAL:	72.1	72	
													84.2	84	
												KVA / PHASE TOTAL:	156.3	156	
												AMP / PHASE TOTAL:	1303	1300	

NOTES:
PANELBOARD ENCLOSURE TO BE NEMA 3R.
MAIN BREAKER TO BE PROVIDED WITH REDUCED ENERGY LET-THRU MAINTENANCE SWITCH

TOTAL CONNECTED LOAD: 312.30 KVA
TOTAL CONNECTED CURRENT: 1301.25 AMPS
TOTAL DEMAND CURRENT: 1201.46 AMPS

PANELBOARD DP2I SCHEDULE

SERVICE: 240/120 VOLT , 1 - PHASE , 3 - WIRE
AMP: 1000 AMP
MAINS: MCB / 1000 AMP MAIN BREAKER

BUS: COPPER, S/N ,GND BUS
MOUNTING: SURFACE

RATING: 42000 A.I.C.
LOCATION: INNER CAMP
SOUTHEAST

REV NO.	NOTE NO.	LOAD CRT#	LOAD DESCRIPTION	BRKR P	BRKR AMP	LOAD KVA A	LOAD KVA B	LOAD CRT#	LOAD DESCRIPTION	BRKR P	BRKR AMP	LOAD KVA A	LOAD KVA B	NOTE NO.	REV NO.
		1	SITES 191, 192, 223, 224	2	250	24		2	SITES 189, 190, 221, 222	2	250	24			
							24						24		
		3	SITES 187,188, 219, 220	2	250	24		4	SITES 183, 184, 215, 216	2	250	24			
							24						24		
		5	SITES 181, 182, 213, 214	2	250	24		6	SPARE	2	125				
							24								
		7	POLE LIGHT	1	20	0.2		8	J-BOX - OWNER WIFI	1	20	0.1			
		9	SPARE	1	20			10	SPARE	1	20				
		11	SPARE	1	20			12	SPARE	1	20				
		13	SPARE	1	20			14	SPARE	1	20				
		15	SPARE	1	20			16	SPARE	1	20				
		17	SPARE	1	20			18	SPARE	1	20				
		19	SPARE	1	20			20	SPARE	1	20				
						TOTAL:	72.2	72				TOTAL:	48.1	48	
													72.2	72	
												KVA / PHASE TOTAL:	120.3	120	
												AMP / PHASE TOTAL:	1003	1000	

NOTES:
PANELBOARD ENCLOSURE TO BE NEMA 3R.

TOTAL CONNECTED LOAD: 240.30 KVA
TOTAL CONNECTED CURRENT: 1001.25 AMPS
TOTAL DEMAND CURRENT: 1001.46 AMPS

PANELBOARD DP1I SCHEDULE

SERVICE: 240/120 VOLT , 1 - PHASE , 3 - WIRE
AMP: 1200 AMP
MAINS: MCB / 1200 AMP MAIN BREAKER

BUS: COPPER, S/N ,GND BUS
MOUNTING: SURFACE

RATING: 42000 A.I.C.
LOCATION: INNER CAMP
SOUTHEAST

REV NO.	NOTE NO.	LOAD CRT#	LOAD DESCRIPTION	BRKR P	BRKR AMP	LOAD KVA A	LOAD KVA B	LOAD CRT#	LOAD DESCRIPTION	BRKR P	BRKR AMP	LOAD KVA A	LOAD KVA B	NOTE NO.	REV NO.
		1	SITES 203, 204, 235, 236	2	250	24		2	SITES 201, 202, 233, 234	2	250	24			
							24						24		
		3	SITES 199, 200, 231, 232	2	250	24		4	SITES 197, 198, 229, 230	2	250	24			
							24						24		
		5	SITES 195, 196, 227, 228	2	250	24		6	SITES 193, 194, 225, 226	2	250	24			
							24						24		
		7	POLE LIGHT	1	20	0.2		8	J-BOX - OWNER WIFI	1	20	0.1			
		9	SPARE	1	20			10	SPARE	1	20				
		11	SPARE	1	20			12	SPARE	1	20				
		13	SPARE	1	20			14	SPARE	1	20				
		15	SPARE	1	20			16	SPARE	1	20				
		17	SPARE	1	20			18	SPARE	1	20				
		19	SPARE	1	20			20	SPARE	1	20				
						TOTAL:	72.2	72				TOTAL:	72.1	72	
													72.2	72	
												KVA / PHASE TOTAL:	144.3	144	
												AMP / PHASE TOTAL:	1203	1200	

NOTES:
PANELBOARD ENCLOSURE TO BE NEMA 3R.
MAIN BREAKER TO BE PROVIDED WITH REDUCED ENERGY LET-THRU MAINTENANCE SWITCH

TOTAL CONNECTED LOAD: 288.30 KVA
TOTAL CONNECTED CURRENT: 1201.25 AMPS
TOTAL DEMAND CURRENT: 1201.46 AMPS

STATE OF MISSOURI
MICHAEL L. PARSON,
GOVERNOR

STATE OF MISSOURI
MONICA SANTOYO SANTOS
NUMBER E-2000174546
REGISTERED PROFESSIONAL ENGINEER
8/29/2019

Monica S Santos
MO# E-2000174546

MEP Engineer:

Antella
CONSULTING ENGINEERS INC.

1600 Genessee, Suite 260
Kansas City, Missouri 64102
email: antella@antella-inc.com
Tele 816-421-0950
Fax 816-249-2439

License Name: Antella Consulting Engineers, Inc.
Profession Name: Professional Engineering Corporation
Licensee Number: E-2005013590

Civil Engineer:

SK Design Group, Inc.
Civil Engineers
4600 College Blvd., Suite 100
Overland Park, KS 66211
(913)-451-1818
fax (913)-451-7599
www.skdg.com

License Name: SK Design Group, Inc.
Profession Name: Professional Engineering Corporation
Licensee Number: E-1274-F

OFFICE OF ADMINISTRATION
DIVISION OF FACILITIES MANAGEMENT,
DESIGN AND CONSTRUCTION

DEPARTMENT OF AGRICULTURE

UPGRADE INNER CAMPGROUND UTILITIES

MISSOURI STATE FAIRGROUNDS
2503 W 16TH STREET
SEDALIA, MISSOURI 65301

PROJECT # F1905-01
SITE # 1501
FACILITY # 3511501142

REVISION:
DATE:
REVISION:
DATE:
REVISION:
DATE:
ISSUE DATE: 08/29/2019

CAD DWG FILE:
DRAWN BY: PSJ
CHECKED BY: MSS
DESIGNED BY: PSJ

SHEET TITLE:
ELECTRICAL PANEL SCHEDULES -INNER

SHEET NUMBER:
E611

SHEET 21 0F 25
08/29/2019

PANELBOARD DP11I SCHEDULE

SERVICE: 240/120 VOLT , 1 - PHASE , 3 - WIRE
BUS: COPPER, S/N ,GND BUS
RATING: 42000 A.I.C.
AMP: 1200 AMP
LOCATION: INNER CAMP
MAINS: MCB / 1200 AMP MAIN BREAKER
MOUNTING: SURFACE
NORTH - WEST

REV NO.	NOTE NO.	LOAD CRT#	LOAD DESCRIPTION	BRKR P	BRKR AMP	LOAD KVA A	LOAD KVA B	LOAD CRT#	LOAD DESCRIPTION	BRKR P	BRKR AMP	LOAD KVA A	LOAD KVA B	NOTE NO.	REV NO.
		1	SITES 19, 20, 61, 62	2	250	24		2	SITES 17, 18, 59, 60	2	250	24			
							24						24		
		3	SITES 15, 16, 57, 58	2	250	24		4	SITES 13, 14, 55, 56	2	250	24			
							24						24		
		5	SITES 11, 12, 53, 54	2	250	24		6	SITES 9, 10, 51, 52	2	250	24			
							24						24		
		7	SITES 7, 8, 49, 50	2	250	24		8	SITES 5,6, 47, 48	2	250	24			
							24						24		
		9	3, 4, 45, 46	2	250	24		10	SITES 1, 2, 43, 44	2	250	24			
							24						24		
		11	POLE LIGHT	1	20	0.2		12	J-BOX - OWNER WIFI	1	20	0.1			
		13	SPARE	1	20			14	SPARE	1	20				
		15	SPARE	1	20			16	SPARE	1	20				
					TOTAL:	120.2	120				TOTAL:	120.1	120		
												120.2	120		
											KVA / PHASE TOTAL:	240.3	240		
											AMP / PHASE TOTAL:	2003	2000		

NOTES:
PANELBOARD ENCLOSURE TO BE NEMA 3R.
MAIN BREAKER TO BE PROVIDED WITH REDUCED ENERGY LET-THRU MAINTENANCE SWITCH

TOTAL CONNECTED LOAD: 480.30 KVA
TOTAL CONNECTED CURRENT: 2001.25 AMPS
TOTAL DEMAND CURRENT: 1200.42 AMPS

BID ALTERNATE #2

PANELBOARD DP10I SCHEDULE

SERVICE: 240/120 VOLT , 1 - PHASE , 3 - WIRE
BUS: COPPER, S/N ,GND BUS
RATING: 42000 A.I.C.
AMP: 1200 AMP
LOCATION: INNER CAMP
MAINS: MCB / 1200 AMP MAIN BREAKER
MOUNTING: SURFACE
NORTH - MIDDLE

REV NO.	NOTE NO.	LOAD CRT#	LOAD DESCRIPTION	BRKR P	BRKR AMP	LOAD KVA A	LOAD KVA B	LOAD CRT#	LOAD DESCRIPTION	BRKR P	BRKR AMP	LOAD KVA A	LOAD KVA B	NOTE NO.	REV NO.
		1	SITES 31, 32, 73, 74	2	250	24		2	SITES 29, 30, 71, 72	2	250	24			
							24						24		
		3	SITES 27, 28, 69, 70	2	250	24		4	SITES 25, 26, 67, 68	2	250	24			
							24						24		
		5	SITES 23, 24, 65, 66	2	250	24		6	SITES 21, 22, 63, 64	2	250	24			
							24						24		
		7	POLE LIGHT	1	20	0.2		8	J-BOX - OWNER WIFI	1	20	0.1			
		9	SPARE	1	20			10	SPARE	1	20				
		11	SPARE	1	20			12	SPARE	1	20				
		13	SPARE	1	20			14	SPARE	1	20				
		15	SPARE	1	20			16	SPARE	1	20				
		17	SPARE	1	20			18	SPARE	1	20				
		19	SPARE	1	20			20	SPARE	1	20				
					TOTAL:	72.2	72				TOTAL:	72.1	72		
												72.2	72		
											KVA / PHASE TOTAL:	144.3	144		
											AMP / PHASE TOTAL:	1203	1200		

NOTES:
PANELBOARD ENCLOSURE TO BE NEMA 3R.
MAIN BREAKER TO BE PROVIDED WITH REDUCED ENERGY LET-THRU MAINTENANCE SWITCH

TOTAL CONNECTED LOAD: 288.30 KVA
TOTAL CONNECTED CURRENT: 1201.25 AMPS
TOTAL DEMAND CURRENT: 1201.46 AMPS

PANELBOARD DP9I SCHEDULE

SERVICE: 240/120 VOLT , 1 - PHASE , 3 - WIRE
BUS: COPPER, S/N ,GND BUS
RATING: 42000 A.I.C.
AMP: 1200 AMP
LOCATION: INNER CAMP
MAINS: MCB / 1200 AMP MAIN BREAKER
MOUNTING: SURFACE
NORTH - WEST

REV NO.	NOTE NO.	LOAD CRT#	LOAD DESCRIPTION	BRKR P	BRKR AMP	LOAD KVA A	LOAD KVA B	LOAD CRT#	LOAD DESCRIPTION	BRKR P	BRKR AMP	LOAD KVA A	LOAD KVA B	NOTE NO.	REV NO.
		1	SITES 41, 42, 83, 84	2	250	24		2	SITES 39, 40 , 81, 82	2	250	24			
							24						24		
		3	SITES 37, 38, 79, 80	2	250	24		4	SITES 35, 36, 77, 78	2	250	24			
							24						24		
		5	SITES 33, 34, 75, 76	2	250	24		6	BID. ALT. 4: NEW FOUR SITE - MIDDLE	2	250	24			
							24						24		
		7	POLE LIGHT	1	20	0.2		8	BID. ALT. 4: NEW DOUBLE SITE	2	250	24			
		9	SPARE	1	20			10					24		
		11	SPARE	1	20			12	J-BOX - OWNER WIFI	1	20	0.1			
		13	SPARE	1	20			14	SPARE	1	20				
		15	SPARE	1	20			16	SPARE	1	20				
		17	SPARE	1	20			18	SPARE	1	20				
		19	SPARE	1	20			20	SPARE	1	20				
					TOTAL:	72.2	72				TOTAL:	96.1	96		
												72.2	72		
											KVA / PHASE TOTAL:	168.3	168		
											AMP / PHASE TOTAL:	1403	1400		

NOTES:
PANELBOARD ENCLOSURE TO BE NEMA 3R.
MAIN BREAKER TO BE PROVIDED WITH REDUCED ENERGY LET-THRU MAINTENANCE SWITCH

TOTAL CONNECTED LOAD: 336.30 KVA
TOTAL CONNECTED CURRENT: 1401.25 AMPS
TOTAL DEMAND CURRENT: 1201.46 AMPS

BID ALTERNATE #1

PANELBOARD DP8I SCHEDULE

SERVICE: 240/120 VOLT , 1 - PHASE , 3 - WIRE
BUS: COPPER, S/N ,GND BUS
RATING: 42000 A.I.C.
AMP: 1200 AMP
LOCATION: INNER CAMP
MAINS: MCB / 1200 AMP MAIN BREAKER
MOUNTING: SURFACE
WEST - MIDDLE

REV NO.	NOTE NO.	LOAD CRT#	LOAD DESCRIPTION	BRKR P	BRKR AMP	LOAD KVA A	LOAD KVA B	LOAD CRT#	LOAD DESCRIPTION	BRKR P	BRKR AMP	LOAD KVA A	LOAD KVA B	NOTE NO.	REV NO.
		1	SITES 95, 96, 119, 120	2	250	24		2	SITES 93, 94, 117, 118	2	250	24			
							24						24		
		3	SITES 91, 92, 115, 116	2	250	24		4	SITES 89, 90, 113, 114	2	250	24			
							24						24		
		5	SITES 87, 88, 111, 112	2	250	24		6	SITES 85, 86, 109, 110	2	250	24			
							24						24		
		7	POLE LIGHT	1	20	0.2		8	SITE 85/86 - NEMA 10-50R	2	50	8			
		9	SPARE	1	20			10					8		
		11	SPARE	1	20			12	J-BOX - OWNER WIFI	1	20	0.1			
		13	SPARE	1	20			14	SPARE	1	20				
		15	SPARE	1	20			16	SPARE	1	20				
		17	SPARE	1	20			18	SPARE	1	20				
		19	SPARE	1	20			20	SPARE	1	20				
					TOTAL:	72.2	72				TOTAL:	80.1	80		
												72.2	72		
											KVA / PHASE TOTAL:	152.3	152		
											AMP / PHASE TOTAL:	1269	1267		

NOTES:
PANELBOARD ENCLOSURE TO BE NEMA 3R.
MAIN BREAKER TO BE PROVIDED WITH REDUCED ENERGY LET-THRU MAINTENANCE SWITCH

TOTAL CONNECTED LOAD: 304.30 KVA
TOTAL CONNECTED CURRENT: 1267.92 AMPS
TOTAL DEMAND CURRENT: 1268.13 AMPS

PANELBOARD DP7I SCHEDULE

SERVICE: 240/120 VOLT , 1 - PHASE , 3 - WIRE
BUS: COPPER, S/N ,GND BUS
RATING: 42000 A.I.C.
AMP: 1200 AMP
LOCATION: INNER CAMP
MAINS: MCB / 1200 AMP MAIN BREAKER
MOUNTING: SURFACE
EAST - MIDDLE

REV NO.	NOTE NO.	LOAD CRT#	LOAD DESCRIPTION	BRKR P	BRKR AMP	LOAD KVA A	LOAD KVA B	LOAD CRT#	LOAD DESCRIPTION	BRKR P	BRKR AMP	LOAD KVA A	LOAD KVA B	NOTE NO.	REV NO.
		1	SITES 107, 108, 131, 132	2	250	24		2	SITES 105, 106, 129, 130	2	250	24			
							24						24		
		3	SITES 103, 104, 127, 128	2	250	24		4	SITES 101, 102, 125, 126	2	250	24			
							24						24		
		5	SITES 99, 100, 123, 124	2	250	24		6	SITES 97, 98, 121, 122	2	250	24			
							24						24		
		7	POLE LIGHT	1	20	0.2		8	J-BOX - OWNER WIFI	1	20	0.1			
		9	SPARE	1	20			10	SPARE	1	20				
		11	SPARE	1	20			12	SPARE	1	20				
		13	SPARE	1	20			14	SPARE	1	20				
		15	SPARE	1	20			16	SPARE	1	20				
		17	SPARE	1	20			18	SPARE	1	20				
		19	SPARE	1	20			20	SPARE	1	20				
					TOTAL:	72.2	72				TOTAL:	72.1	72		
												72.2	72		
											KVA / PHASE TOTAL:	144.3	144		
											AMP / PHASE TOTAL:	1203	1200		

NOTES:
PANELBOARD ENCLOSURE TO BE NEMA 3R.
MAIN BREAKER TO BE PROVIDED WITH REDUCED ENERGY LET-THRU MAINTENANCE SWITCH

TOTAL CONNECTED LOAD: 288.30 KVA
TOTAL CONNECTED CURRENT: 1201.25 AMPS
TOTAL DEMAND CURRENT: 1201.46 AMPS

STATE OF MISSOURI
MICHAEL L. PARSON,
GOVERNOR

STATE OF MISSOURI
MONICA SANTOYO SANTOS
NUMBER E-2000174546
REGISTERED PROFESSIONAL ENGINEER
8/29/2019

Monica S Santos
MO# E-2000174546

MEP Engineer:
Antella
CONSULTING ENGINEERS INC.
1600 Genessee, Suite 260
Kansas City, Missouri 64102
email: antella@antella-inc.com
Tele 816-421-0950
Fax 816-249-2439
License Name: Antella Consulting Engineers, Inc.
Profession Name: Professional Engineering Corporation
Licensee Number: E-2005013590

Civil Engineer:
SK Design Group, Inc.
Civil Engineers
4600 College Blvd., Suite 100
Overland Park, KS 66211
(913)-451-1818
fax (913)-451-7599
www.skdg.com
License Name: SK Design Group, Inc.
Profession Name: Professional Engineering Corporation
Licensee Number: E-1274-F

OFFICE OF ADMINISTRATION
DIVISION OF FACILITIES MANAGEMENT,
DESIGN AND CONSTRUCTION

DEPARTMENT OF AGRICULTURE

UPGRADE INNER CAMPGROUND UTILITIES

MISSOURI STATE FAIRGROUNDS
2503 W 16TH STREET
SEDALIA, MISSOURI 65301

PROJECT # F1905-01
SITE # 1501
FACILITY # 3511501142

REVISION:
DATE:
REVISION:
DATE:
REVISION:
DATE:
ISSUE DATE: 08/29/2019

CAD DWG FILE:
DRAWN BY: PSJ
CHECKED BY: MSS
DESIGNED BY: PSJ

SHEET TITLE:
ELECTRICAL PANEL SCHEDULES -INNER

SHEET NUMBER:
E612

SHEET 22 0F 25
08/29/2019

PANELBOARD DP13I SCHEDULE

SERVICE: 240/120 VOLT , 1 - PHASE , 3 - WIRE
BUS: COPPER, S/N ,GND BUS
RATING: 42000 A.I.C.
AMP: 1200 AMP
LOCATION: INNER CAMP
MAINS: MCB / 1200 AMP MAIN BREAKER
MOUNTING: SURFACE
EAST

REV NO.	NOTE NO.	LOAD CRT#	LOAD DESCRIPTION	BRKR P	BRKR AMP	LOAD KVA A	LOAD KVA B	LOAD CRT#	LOAD DESCRIPTION	BRKR P	BRKR AMP	LOAD KVA A	LOAD KVA B	NOTE NO.	REV NO.
		1	SITES 325-328	2	250	24		2	SITES 337-340	2	250	24			
							24						24		
		3	SITES 329-332	2	250	24		4	SITES 341-344	2	250	24			
							24						24		
		5	SITES 333-336	2	250	24		6	SITES 345, 346	2	125	12			
							24						12		
		7	POLE LIGHT	1	20	0.2		8	J-BOX - OWNER WIFI	1	20	0.1			
		9	SPARE	1	20			10	SPARE	1	20				
		11	SPARE	1	20			12	SPARE	1	20				
		13	SPARE	1	20			14	SPARE	1	20				
		15	SPARE	1	20			16	SPARE	1	20				
		17	SPARE	1	20			18	SPARE	1	20				
		19	SPARE	1	20			20	SPARE	1	20				
					TOTAL:	72.2	72				TOTAL:	60.1	60		
												72.2	72		
											KVA / PHASE TOTAL:	132.3	132		
											AMP / PHASE TOTAL:	1103	1100		

NOTES:
PANELBOARD ENCLOSURE TO BE NEMA 3R.
MAIN BREAKER TO BE PROVIDED WITH REDUCED ENERGY LET-THRU MAINTENANCE SWITCH

TOTAL CONNECTED LOAD: 264.30 KVA
TOTAL CONNECTED CURRENT: 1101.25 AMPS
TOTAL DEMAND CURRENT: 1101.46 AMPS

PANELBOARD DP12I SCHEDULE

SERVICE: 240/120 VOLT , 1 - PHASE , 3 - WIRE
BUS: COPPER, S/N ,GND BUS
RATING: 42000 A.I.C.
AMP: 1200 AMP
LOCATION: INNER CAMP
MAINS: MCB / 1200 AMP MAIN BREAKER
MOUNTING: SURFACE
EAST

REV NO.	NOTE NO.	LOAD CRT#	LOAD DESCRIPTION	BRKR P	BRKR AMP	LOAD KVA A	LOAD KVA B	LOAD CRT#	LOAD DESCRIPTION	BRKR P	BRKR AMP	LOAD KVA A	LOAD KVA B	NOTE NO.	REV NO.
		1	SITES 301-304	2	250	24		2	SITES 313-316	2	250	24			
							24						24		
		3	SITES 305-308	2	250	24		4	SITES 317-320	2	250	24			
							24						24		
		5	SITES 309-312	2	250	24		6	SITES 321-324	2	250	24			
							24						24		
		7	POLE LIGHT	1	20	0.2		8	J-BOX - OWNER WIFI	1	20	0.1			
		9	SPARE	1	20			10	SPARE	1	20				
		11	SPARE	1	20			12	SPARE	1	20				
		13	SPARE	1	20			14	SPARE	1	20				
		15	SPARE	1	20			16	SPARE	1	20				
		17	SPARE	1	20			18	SPARE	1	20				
		19	SPARE	1	20			20	SPARE	1	20				
					TOTAL:	72.2	72				TOTAL:	72.1	72		
												72.2	72		
											KVA / PHASE TOTAL:	144.3	144		
											AMP / PHASE TOTAL:	1203	1200		

NOTES:
PANELBOARD ENCLOSURE TO BE NEMA 3R.
MAIN BREAKER TO BE PROVIDED WITH REDUCED ENERGY LET-THRU MAINTENANCE SWITCH

TOTAL CONNECTED LOAD: 288.30 KVA
TOTAL CONNECTED CURRENT: 1201.25 AMPS
TOTAL DEMAND CURRENT: 1201.46 AMPS

STATE OF MISSOURI
MICHAEL L. PARSON,
GOVERNOR

STATE OF MISSOURI
MONICA SANTOYO SANTOS
NUMBER E-2000174546
REGISTERED PROFESSIONAL ENGINEER
8/29/2019

Monica S Santos
MO# E-2000174546

MEP Engineer:

Antella
CONSULTING ENGINEERS INC.

1600 Genessee, Suite 260
Kansas City, Missouri 64102
email: antella@antella-inc.com
Tele 816-421-0950
Fax 816-249-2439

License Name: Antella Consulting Engineers, Inc.
Profession Name: Professional Engineering Corporation
Licensee Number: E-2005013590

Civil Engineer:

SK Design Group, Inc.
Civil Engineers
4600 College Blvd., Suite 100
Overland Park, KS 66211
(913)-451-1818
fax (913)-451-7599
www.skdg.com

License Name: SK Design Group, Inc.
Profession Name: Professional Engineering Corporation
Licensee Number: E-1274-F

OFFICE OF ADMINISTRATION
DIVISION OF FACILITIES MANAGEMENT,
DESIGN AND CONSTRUCTION

DEPARTMENT OF AGRICULTURE

UPGRADE INNER CAMPGROUND UTILITIES

MISSOURI STATE FAIRGROUNDS
2503 W 16TH STREET
SEDALIA, MISSOURI 65301

PROJECT # F1905-01
SITE # 1501
FACILITY # 3511501142

REVISION:
DATE:
REVISION:
DATE:
REVISION:
DATE:
ISSUE DATE: 08/29/2019

CAD DWG FILE:
DRAWN BY: PSJ
CHECKED BY: MSS
DESIGNED BY: PSJ

SHEET TITLE:
ELECTRICAL PANEL SCHEDULES -INNER

SHEET NUMBER:
E613

SHEET 23 0F 25
08/29/2019

MV FEEDER SCHEDULE				
SYMBOL NUMBER	AMPACITY	NUMBER OF RUNS	FEEDER SIZE/NOTE	TEMP RATING
1	200	1	(1) #1/0, 15KV, MV-105, 133% EPR, SHIELDED & (1) # 1/0, 600V NEUTRAL IN 4" SCH. 40 PVC CONDUIT MINIMUM 24" BELOW GRADE. SEE DETAIL 1, SHEET E512 FOR CONDUIT TRENCH DETAILS.	
2	200	1	(3) #1/0, 15KV, MV-105, 133% EPR, SHIELDED & (1) # 1/0, 600V NEUTRAL IN 4" SCH. 40 PVC CONDUIT MINIMUM 24" BELOW GRADE. SEE DETAIL 1, SHEET E512 FOR CONDUIT TRENCH DETAILS.	
3			#4/0 COPPER GROUNDING CONDUCTOR TO SWITCHGEAR GROUND GRID. SEE DETAIL 1, SHEET E511 FOR ADDITIONAL INFORMATION.	
4			#4/0 COPPER GROUNDING CONDUCTOR TO SECTIONALIZER GROUND GRID. SEE DETAIL 3, SHEET E511 FOR ADDITIONAL INFORMATION.	
5			#4/0 COPPER GROUNDING CONDUCTOR TO TRANSFORMER GROUND ROD AND GRID. SEE DETAIL 2, SHEET E511 FOR ADDITIONAL INFORMATION.	
6	200	1	(2) #1/0, 15KV, MV-105, 133% EPR, SHIELDED & (1) # 1/0, 600V NEUTRAL IN 4" SCH. 40 PVC CONDUIT MINIMUM 24" BELOW GRADE. SEE DETAIL 1, SHEET E512 FOR CONDUIT TRENCH DETAILS.	
7			SEE SHEET E812, TYPICAL 120/240V ELECTRICAL RISER DIAGRAM, FOR CONTINUATION.	

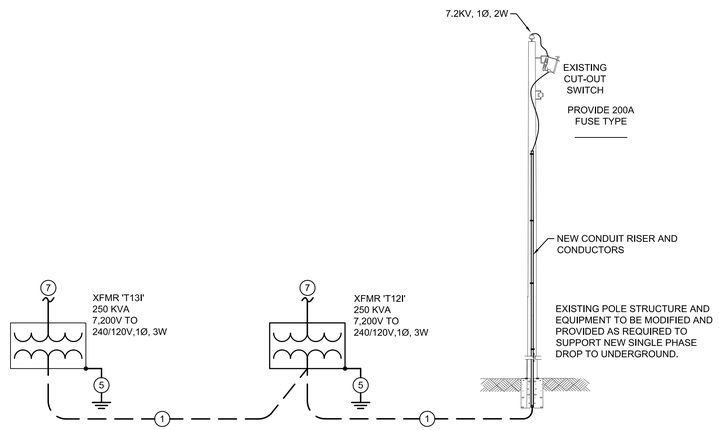

2 MEDIUM-VOLTAGE ONE-LINE DIAGRAM - INNER SITES 301-346
NO SCALE

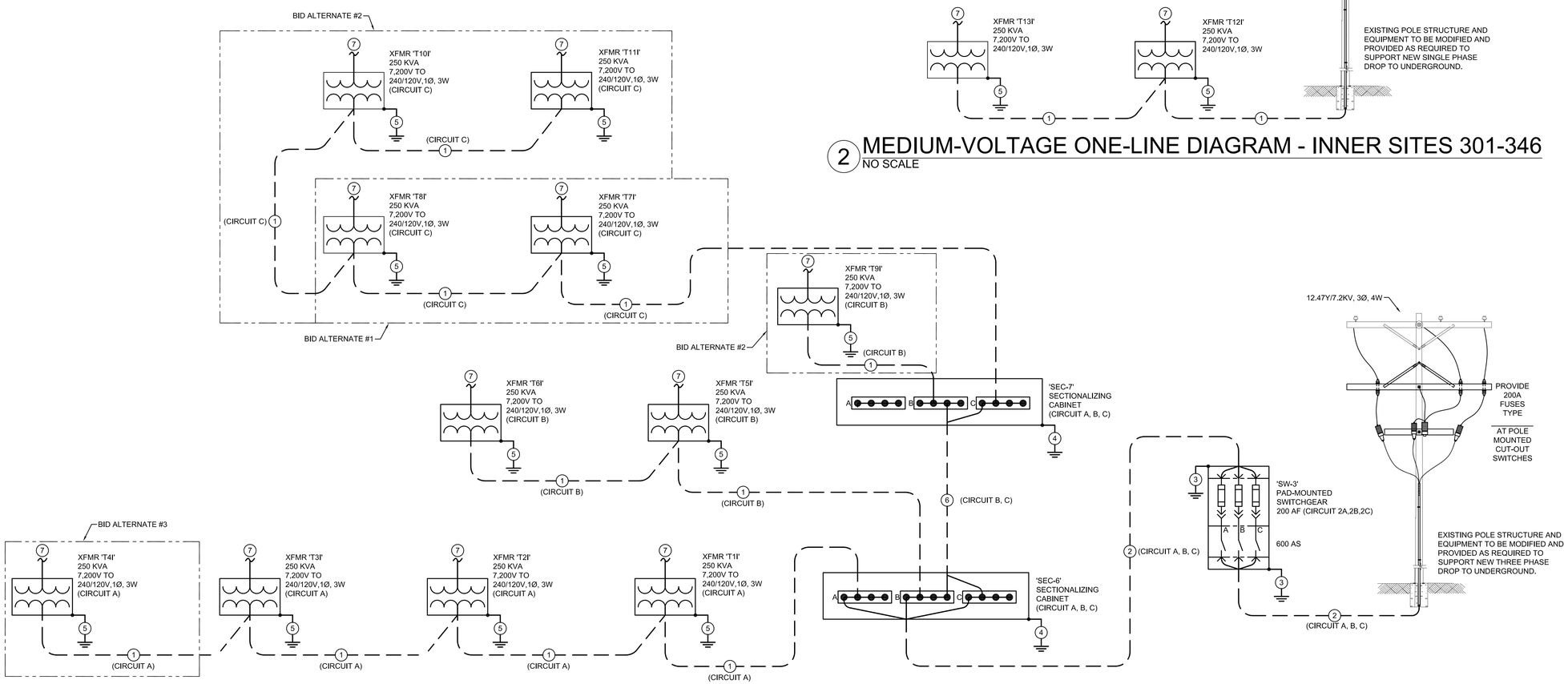

1 MEDIUM-VOLTAGE ONE-LINE DIAGRAM - INNER
NO SCALE

STATE OF MISSOURI
MICHAEL L. PARSON, GOVERNOR

STATE OF MISSOURI
MONICA SANTOYO SANTOS
NUMBER E-2000174546
REGISTERED PROFESSIONAL ENGINEER
8/29/2019

Monica S Santos
MO# E-2000174546

MEP Engineer:

Antella
CONSULTING ENGINEERS INC.

1600 Genessee, Suite 260
Kansas City, Missouri 64102
email: antella@antella-inc.com
Tele 816-421-0950
Fax 816-249-2439

License Name: Antella Consulting Engineers, Inc.
Profession Name: Professional Engineering Corporation
Licensee Number: E-2005013590

Civil Engineer:

SK Design Group, Inc.
Civil Engineers
4600 College Blvd., Suite 100
Overland Park, KS 66211
(913)-451-1818
fax (913)-451-7599
www.skdg.com

License Name: SK Design Group, Inc.
Profession Name: Professional Engineering Corporation
Licensee Number: E-1274-F

OFFICE OF ADMINISTRATIO
DIVISION OF FACILITIES MANAGEMENT, DESIGN AND CONSTRUCTIO

DEPARTMENT OF AGRICULTURE

UPGRADE INNER CAMPGROUND UTILITIES

MISSOURI STATE FAIRGROUNDS
2503 W 16TH STREET
SEDALIA, MISSOURI 65301

PROJECT # F1905-01
SITE # 1501
FACILITY # 3511501142

REVISION:
DATE:
REVISION:
DATE:
REVISION:
DATE:
ISSUE DATE: 08/29/2019

CAD DWG FILE:
DRAWN BY: PSJ
CHECKED BY: MSS
DESIGNED BY: PSJ

SHEET TITLE:
MEDIUM VOLTAGE ONE-LINE DIAGRAM-INNER

SHEET NUMBER:
E811

SHEET 24 0F 25
08/29/2019

LUMINAIRE SCHEDULE

TYPE	MOUNTING	LAMPS	LUMENS	COLOR TEMP	CRI	WATTS	VOLTAGE	BASIS OF DESIGN MANUFACTURER	DESCRIPTION
A	POLE	LED	7000	5000 K	70	50	120/277 V	EATON CARETAKER LED CRTK2-C018-D-U-T5R-7050-WPBKT-B18-A-LLPC	EXTERIOR RATED AREA LUMINAIRE, TYPE 5 DISTRIBUTION, 0-10V DRIVER, ALUMINUM HOUSING, INTEGRAL PHOTOCELL FOR DUSK TO DAWN OPERATION, BRACKET FOR ROUND WOOD POLE MOUNTING AND 18 INCH ARM

GENERAL NOTES:

PROVIDE ALL REQUIRED ACCESSORIES/OPTIONS FOR A COMPLETE INSTALLATION.

120/240V FEEDER SCHEDULE

SYMBOL NUMBER	AMPACITY	NUMBER OF RUNS	FEEDER SIZE/NOTE	TEMP RATING
1			SEE MEDIUM VOLTAGE ONE-LINE DIAGRAMS, SHEET E811 FOR ADDITIONAL INFORMATION ON MEDIUM-VOLTAGE SYSTEM AND ASSOCIATED EQUIPMENT.	
2A	1200	4	(3) #350 KCMIL IN 3" CONDUIT TO MATCH ASSOCIATED PANELBOARD.	90 DEG
2B	1000	3	(3) #400 KCMIL IN 3" CONDUIT TO MATCH ASSOCIATED PANELBOARD.	90 DEG
2C	800	2	(3) #500 KCMIL IN 3-1/2" CONDUIT TO MATCH ASSOCIATED PANELBOARD.	90 DEG
3			#3/0 COPPER GROUNDING CONDUCTOR TO 3/4" X 10' GROUND ROD.	
4A	250	1	(3) #250 KCMIL & (1) # 4 GROUND IN 2-1/2" CONDUIT.	90 DEG
4B	125	1	(3) #1 & (1) #6 GROUND IN 1-1/2" CONDUIT FOR SINGLE PEDESTAL INSTALLATIONS AS NOTED ON PLANS AND PANEL SCHEDULES.	90 DEG
5			PROVIDE NEW NEMA 3R, DIRECT BURIED, 125A, 120/240V, 1 PH, 3 WIRE DOUBLE SIDED PEDESTAL (EATON CHJ1N2GAN) WITH FULLY RATED LOOP-FEED LUG ASSEMBLY (MIN. #250 KCMIL). EACH SIDE TO INCLUDE ONE (1) 20A, 1P, GFCI, ONE (1) 30A, 1P AND ONE (1) 50A, 2P BREAKER TO SERVE THE FOLLOWING RECEPTACLES: 20A NEMA 5-20 (WEATHER RESISTANT TYPE) ; 30A NEMA TT-30 AND 50A, NEMA 14-50R.	
6			PANELBOARD TO BE 1200A, 1000A OR 800A RATED AS NOTED ON SCHEDULE.	
7			#6 COPPER GROUNDING CONDUCTOR TO 3/4" X 10' GROUND ROD.	

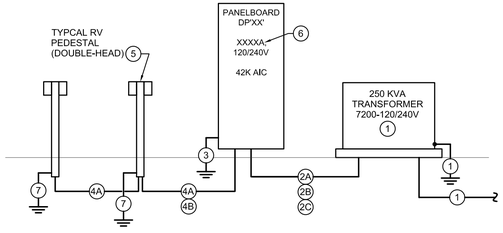

1 120/240V TYPICAL ELECTRICAL RISER DIAGRAM
NO SCALE

STATE OF MISSOURI
MICHAEL L. PARSON,
GOVERNOR

STATE OF MISSOURI
MONICA SANTOYO SANTOS
NUMBER
E-2000174546
REGISTERED PROFESSIONAL ENGINEER
8/29/2019

Monica S Santos
MO# E-2000174546

MEP Engineer:

Antella
CONSULTING ENGINEERS INC.

1600 Genessee, Suite 260 Tele 816-421-0950
Kansas City, Missouri 64102 Fax 816-249-2439
email: antella@antella-inc.com

License Name: Antella Consulting Engineers, Inc.
Profession Name: Professional Engineering Corporation
Licensee Number: E-2005013590

Civil Engineer:

SK Design Group, Inc.
Civil Engineers
4600 College Blvd., Suite 100
Overland Park, KS 66211
(913)-451-1818
fax (913)-451-7599
www.skdg.com

License Name: SK Design Group, Inc.
Profession Name: Professional Engineering Corporation
Licensee Number: E-1274-F

OFFICE OF ADMINISTRATION
DIVISION OF FACILITIES MANAGEMENT,
DESIGN AND CONSTRUCTION

DEPARTMENT OF AGRICULTURE

UPGRADE INNER CAMPGROUND UTILITIES

MISSOURI STATE FAIRGROUNDS
2503 W 16TH STREET
SEDALIA, MISSOURI 65301

PROJECT # F1905-01
SITE # 1501
FACILITY # 3511501142

REVISION:
DATE:
REVISION:
DATE:
REVISION:
DATE:
ISSUE DATE: 08/29/2019

CAD DWG FILE:
DRAWN BY: PSJ
CHECKED BY: MSS
DESIGNED BY: PSJ

SHEET TITLE:
TYPICAL 120/240V ELECTRICAL RISER & LUMINAIRE SCHEDULE

SHEET NUMBER:
E812

SHEET 25 0F 25
08/29/2019