NEW PAVILION
MISSOURI STATE FAIRGROUNDS
Sedalia, Missouri

OWNER: STATE OF MISSOURI
MICHAEL L. PARSON,
GOVERNOR

DEPARTMENT OF AGRICULTURE
MISSOURI STATE FAIR

PROJECT MANAGEMENT: OFFICE OF ADMINISTRATION (OA)
DIVISION OF FACILITIES MANAGEMENT,
DESIGN AND CONSTRUCTION (FMDC)

DESIGNER: OA-FMDC
301 W. High Street
Jefferson City, MO 65101

PROJECT NUMBER: F2001-01

SITE NUMBER: 1501
FACILITY NUMBER: 3511501143

SHEET NUMBER:

G-001

1 OF 31 SHEETS
NOVEMBER 15, 2019

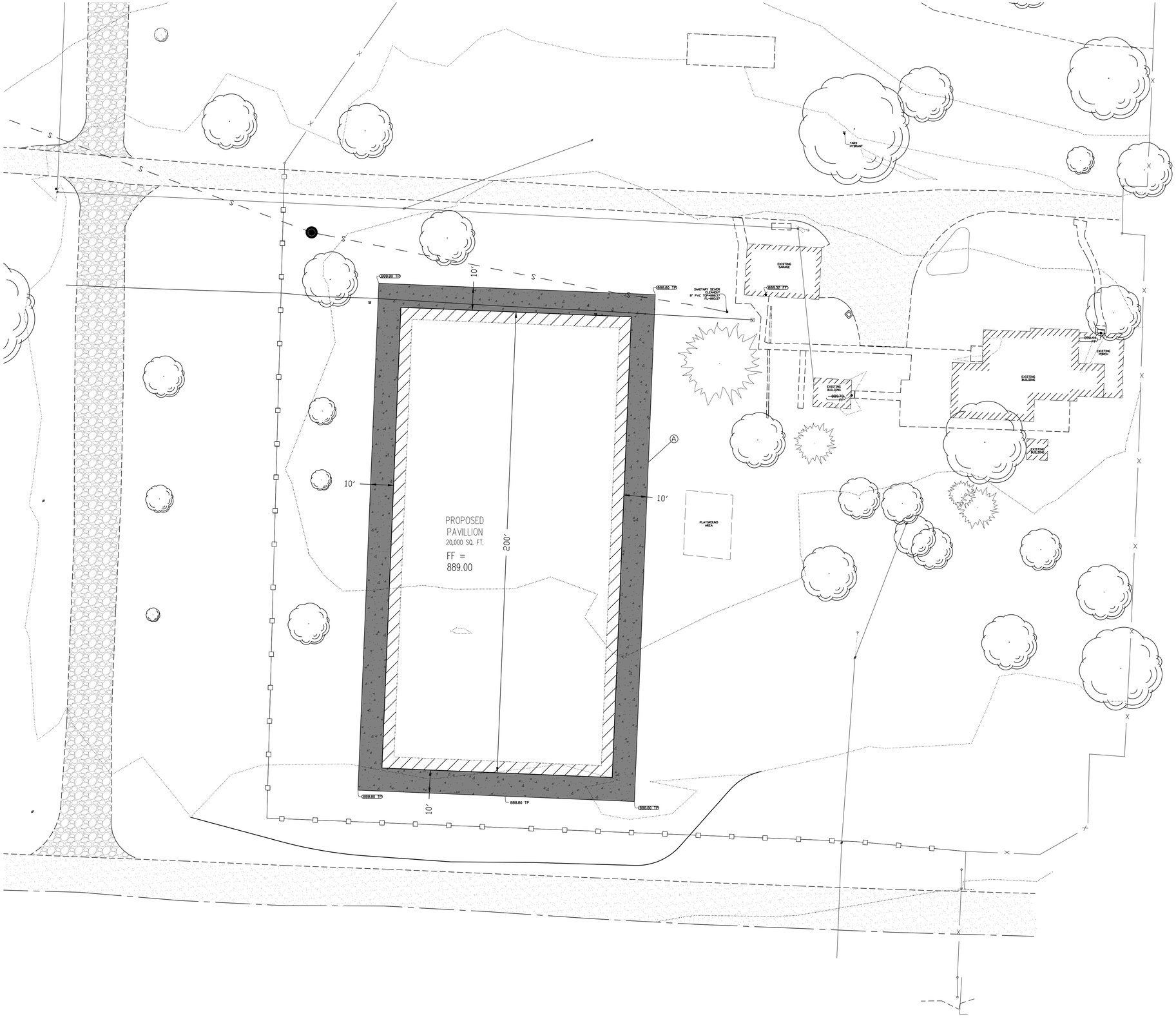

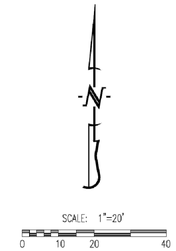

LEGEND OF LABELS

(A)	CONCRETE APRON PAVEMENT AROUND PAVILLION. 6" THICK CONCRETE ON 4" AGGREGATE BASE.

LEGEND OF SYMBOLS:

818	EXISTING 1 FT CONTOUR
820	EXISTING 5 FT CONTOUR
818	PROPOSED 1 FT CONTOUR
820	PROPOSED 5 FT CONTOUR
FF=XXX.X	FINISHED FLOOR OF STRUCTURE
XXX.XX TC	PROPOSED TOP OF CURB ELEVATION TC = (TP+6") UNLESS NOTED OTHERWISE
XXX.XX TP	PROPOSED TOP OF PAVEMENT ELEVATION
XXX.XX FG	PROPOSED FINISH GRADE ELEVATION
XXX.XX FF	PROPOSED FINISH FLOOR AT DOOR
XXX.XX TW	PROPOSED TOP OF WALL ELEVATION

STATE OF MISSOURI
MICHAEL L. PARSON,
GOVERNOR

OFFICE OF ADMINISTRATION
DIVISION OF FACILITIES MANAGEMENT,
DESIGN AND CONSTRUCTION

730 TRUMAN BUILDING
JEFFERSON CITY, MO 65102
POST OFFICE BOX 809
301 WEST HIGH STREET

NEW PAVILION

MISSOURI STATE
FAIRGROUNDS
2503 W. 16TH STREET
SEDALIA, MO 65301

PROJECT # F2001-01
SITE # 1501
FACILITY # 3511501143

REVISION:
DATE:
REVISION:
DATE:
REVISION:
DATE:
ISSUE DATE: 11/15/2019

CAD DWG FILE:
DRAWN BY:
CHECKED BY:
DESIGNED BY:

SHEET TITLE:

SITE
PLAN

SHEET NUMBER:

C-100

2 OF 31 SHEETS

STATE OF MISSOURI
MICHAEL L. PARSON,
GOVERNOR

OFFICE OF ADMINISTRATION
DIVISION OF FACILITIES
MANAGEMENT
DESIGN AND CONSTRUCTION

NEW PAVILION

MISSOURI STATE
FAIRGROUNDS,
2503 W. 16TH STREET
SEDALIA, MO 65301

PROJECT # F2001-01
SITE # 1501
FACILITY # 3511501143

REVISION:
DATE:
REVISION:
DATE:
REVISION:
DATE:
ISSUE DATE: 11/15/2019

CAD DWG FILE:
DRAWN BY:
CHECKED BY:
DESIGNED BY:

SHEET TITLE: SITE SURVEY

SHEET NUMBER: C-101

SHEET 3 OF 31

TOPOGRAPHIC SURVEY

STATE FAIR GROUNDS - GOVERNOR'S PAVILION

LOCATED IN SECTION SECTION 8, TOWNSHIP 45 NORTH, RANGE 21 WEST
SEDALIA, PETTIS COUNTY, MISSOURI
NOVEMBER 8, 2019

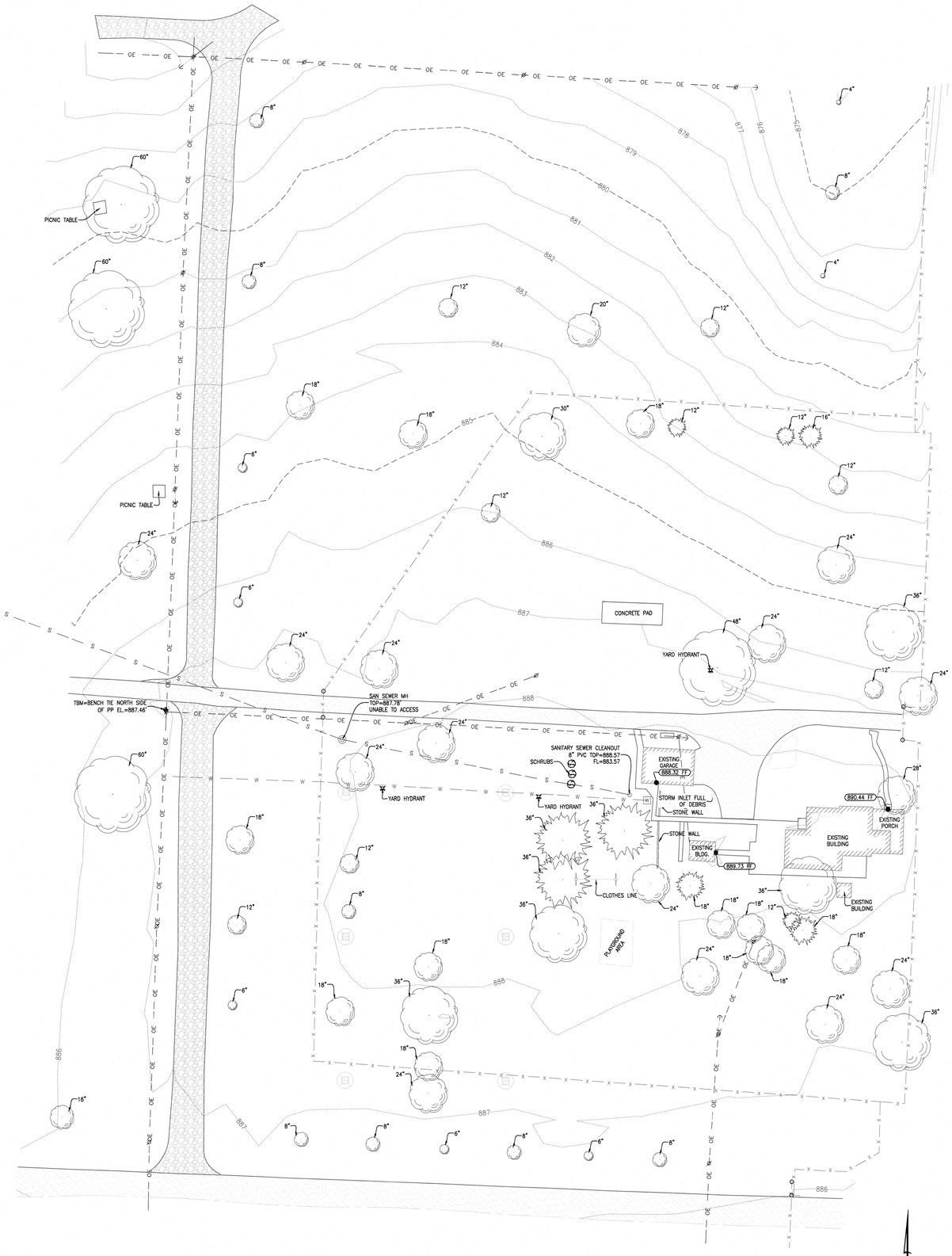

LEGEND:

- EXISTING SAN SEWER MANHOLE
- EXISTING SAN. SEWER CLEANOUT
- EXISTING LIGHT/POWER POLE
- EXISTING GUY WIRE
- EXISTING YARD HYDRANT
- EXISTING WATER VALVE
- EXISTING WATER METER
- BOREHOLE LOCATIONS
- EXISTING CLOTHES LINE/POST
- EXISTING DECIDUOUS TREE
- EXISTING CONIFEROUS TREE
- EXISTING SHRUB
- OE — EXISTING OVERHEAD ELECTRIC
- W — EXISTING WATER LINE
- S — EXISTING SANITARY LINE
- X — EXISTING FENCE LINE
- 819 — EXISTING 1FT CONTOUR
- 820 — EXISTING 5FT CONTOUR

NOTES:

1. THIS TRACT IS LOCATED IN ZONE X-AREAS DETERMINED TO BE OUTSIDE THE 0.2% ANNUAL FLOODPLAIN AS SHOWN BY THE F.E.M.A. F.I.R.M. PANEL NO. 2902830001C, DATED: JANUARY 5, 1996.

DESCRIPTION:

A TOPOGRAPHIC SURVEY OF A TRACT OF LAND LOCATED IN SECTION 8, TOWNSHIP 45 NORTH, RANGE 21 WEST, SEDALIA, PETTIS COUNTY, MISSOURI AND BEING PART OF BLOCKS A, B, C, & D OF WESTMORELAND ADDITION TO THE CITY OF SEDALIA.

SCALE: 1"=30'
0 15 30 60

STATE OF MISSOURI
DAVID THOMAS BUTCHER
NUMBER
PLS-2002014095
PROFESSIONAL LAND SURVEYOR
11/14/19

DAVID T. BUTCHER
PROFESSIONAL LAND SURVEYOR
PLS - 2002014095

STATE FAIR GROUNDS - GOVERNOR'S PAVILION

LOCATED IN SECTION 8, TOWNSHIP 45 NORTH,
RANGE 21 WEST
SEDALIA, PETTIS COUNTY, MISSOURI

CORPORATE NUMBER: 2000159304

DATE:	SCALE:
11/08/2019	1" = 30'
PROJECT: 190479	DRAWN BY: KWF

CROCKETT ENGINEERING CONSULTANTS
1000 W. Nifong Blvd., Building 1
Columbia, Missouri 65203
(573) 447-0292
www.crockettengineering.com

190479

TOPOGRAPHIC SURVEY - GOVERNOR'S PAVILION

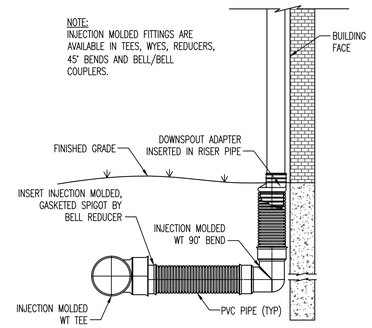

ROOF DRAIN DETAIL

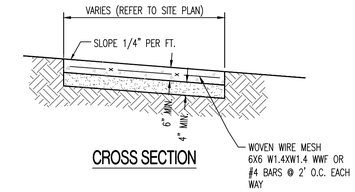

CROSS SECTION

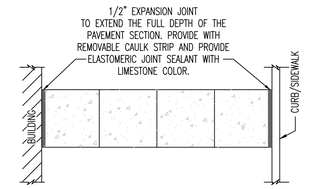

TYPICAL LOCATION OF EXPANSION JOINT AT BUILDING/CURB

NOTE:
1. SIDEWALK SHALL BE 4" THICK CLASS A CONCRETE ON 4" AGGREGATE BASE.
2. INSTALL 1/2" EXPANSION JOINTS AT INTERSECTIONS, RAMPS, STRUCTURES, AND DRIVEWAY APPROACHES. MAX. EXPANSION JOINT SPACING = 150'
3. INSTALL TRANSVERSE SAW JOINTS AT SPACING = SIDEWALK WIDTH.

TYPICAL APRON SIDEWALK

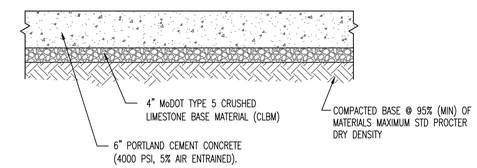

TYPICAL CONCRETE PAVEMENT CROSS SECTION (NORMAL DUTY)

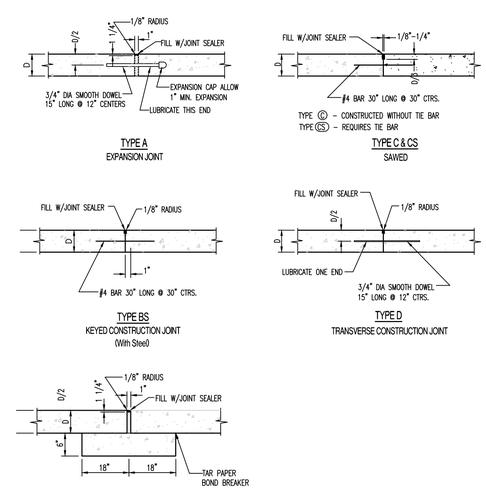

JOINT DETAILS (P.C. Concrete Pavement)

STATE OF MISSOURI
MICHAEL L. PARSON,
GOVERNOR

OFFICE OF ADMINISTRATION
DIVISION OF FACILITIES MANAGEMENT,
DESIGN AND CONSTRUCTION

730 TRUMAN BUILDING
JEFFERSON CITY, MO 65102
POST OFFICE BOX 809
301 WEST HIGH STREET

NEW PAVILION

MISSOURI STATE FAIRGROUNDS
2503 W. 16TH STREET
SEDALIA, MO 65301

PROJECT # F2001-01
SITE # 1501
FACILITY # 3511501143

REVISION:
DATE:
REVISION:
DATE:
REVISION:
DATE:
ISSUE DATE: 11/15/2019

CAD DWG FILE:
DRAWN BY:
CHECKED BY:
DESIGNED BY:

SHEET TITLE:
SITE DETAILS

SHEET NUMBER:
C-500

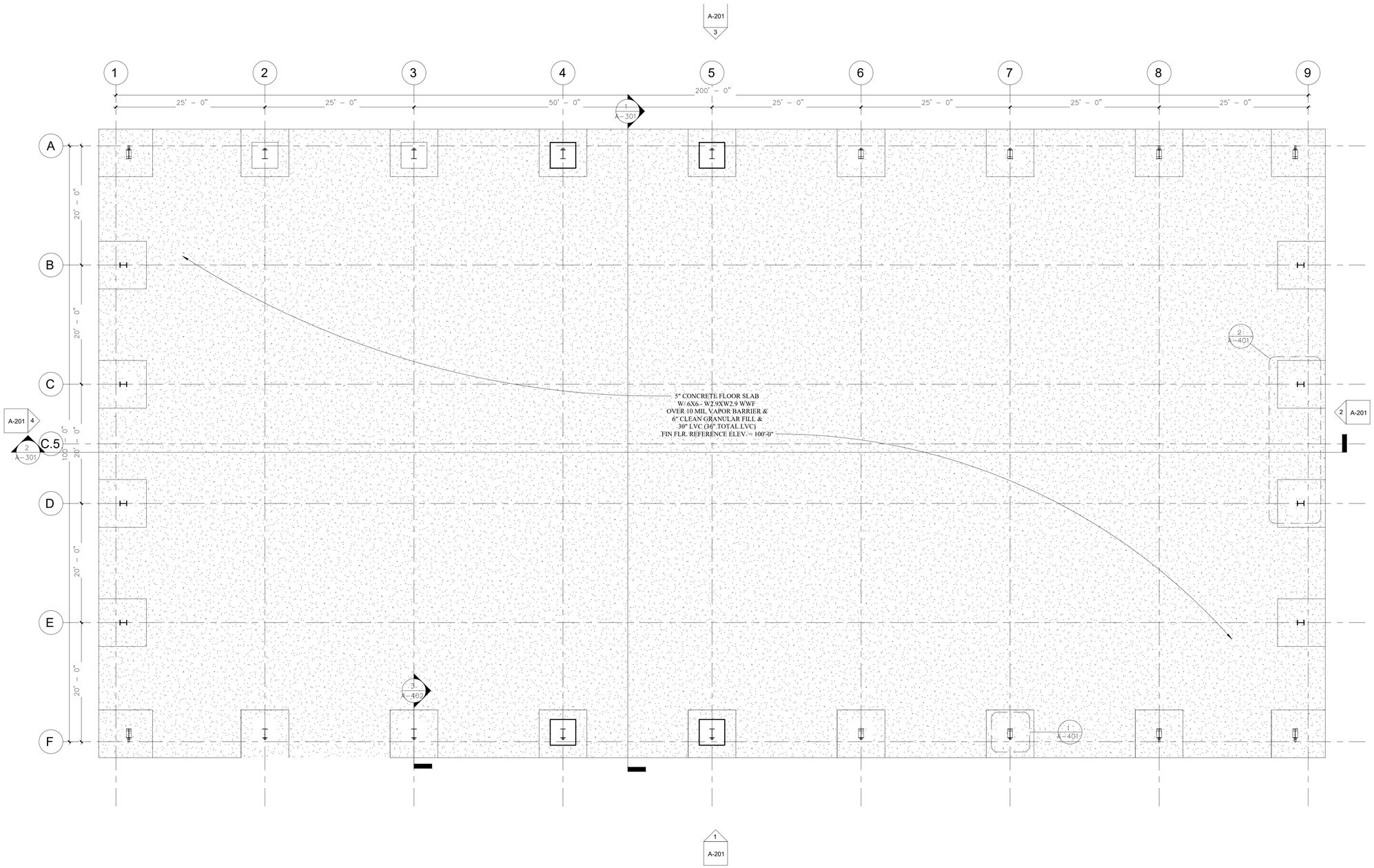

CODE INFORMATION 2018 INTERNATIONAL BUILDING CODE (IBC)

CHAPTER 3 USE AND OCCUPANCY CLASSIFICATION
ASSEMBLY GROUP A-5

CHAPTER 5 GENERAL BUILDING HEIGHTS AND AREAS
TABLE 504.4 ALLOWABLE STORIES, 506.2 ALLOWABLE AREA
ALLOWABLE STORIES, UNLIMITED
ALLOWABLE AREA, UNLIMITED
ACTUAL STORIES, 1 STORY
ACTUAL AREA, 20,000 SQ. FT

CHAPTER 6 TYPES OF CONSTRUCTION
V-B

CHAPTER 9 FIRE PROTECTION AND LIFE SAFETY SYSTEMS
903.2.1.5, SPRINKLER NOT REQUIRED, NO ENCLOSED AREAS.

CHAPTER 10 MEANS OF EGRESS
TABLE 1004.5, ASSEMBLY, CONCENTRATED, STANDING SPACE, 5 NET
ESTIMATED OCCUPANCY = 4,000

1 A-101 FLOOR PLAN
1/8" = 1'-0"

**** SLAB AND FOUNDATIONS SHOWN ARE ONLY CONCEPTUAL. CONTRACTOR TO PROVIDE ENGINEERED FOUNDATION AND SLAB DESIGN TO OWNER FOR REVIEW AND APPROVAL. ****

STATE OF MISSOURI
MICHAEL L. PARSON ,
GOVERNOR

OFFICE OF ADMINISTRATION
DIVISION OF FACILITIES
MANAGEMENT
DESIGN AND CONSTRUCTION

NEW PAVILION

MISSOURI STATE
FAIRGROUNDS,
2503 W. 16TH STREET
SEDALIA, MO 65301

PROJECT # F2001-01
SITE # 1501

FACILITY # 3511501143

REVISION:
DATE:
REVISION:
DATE:
REVISION:
DATE:
ISSUE DATE: 11/15/2019

CAD DWG FILE:
DRAWN BY:
CHECKED BY:
DESIGNED BY:

SHEET TITLE:

FLOOR PLAN

SHEET NUMBER:

A-101

SHEET 5 OF 31

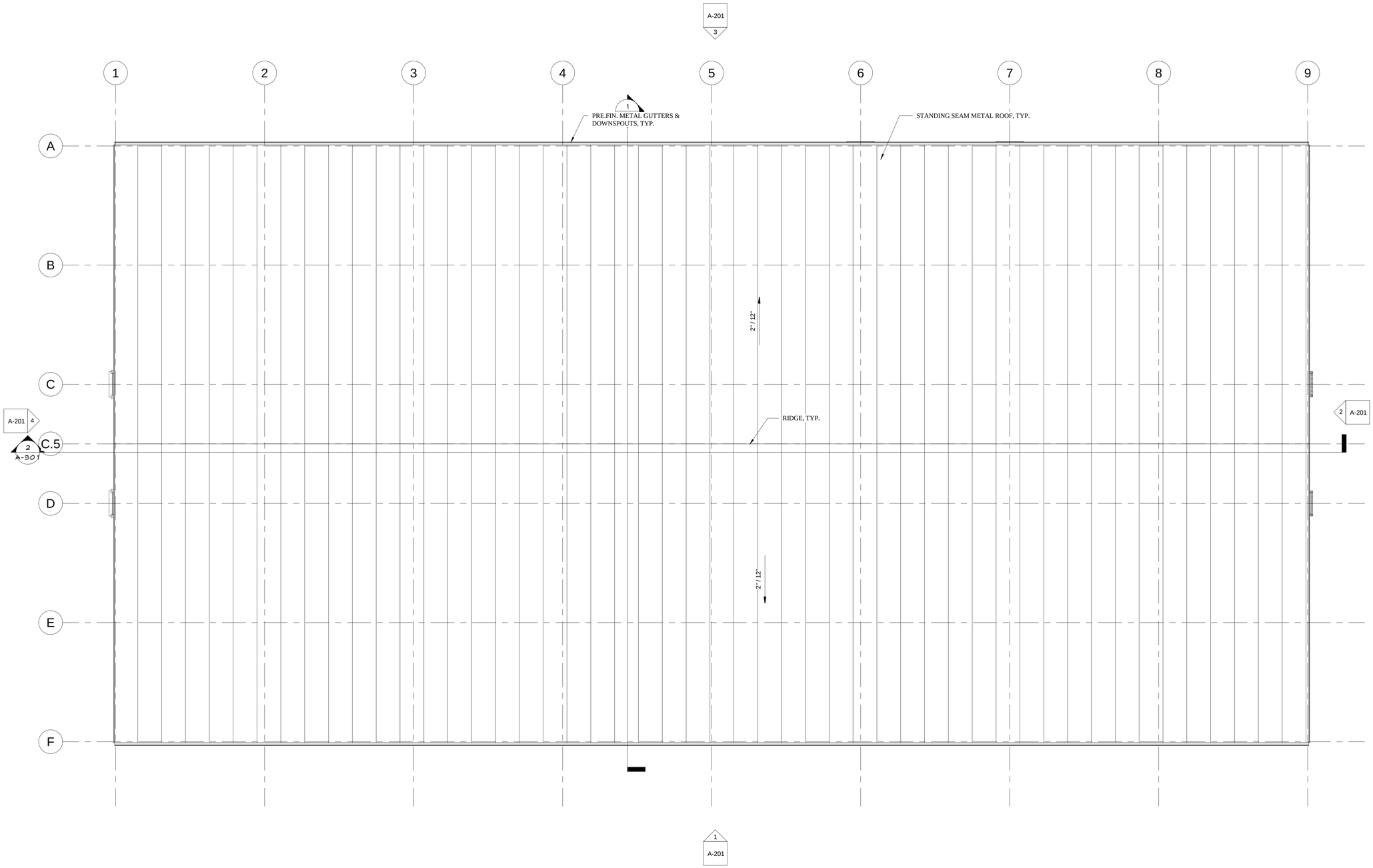

1 A-102 ROOF PLAN
1/8" = 1'-0"

STATE OF MISSOURI
MICHAEL L. PARSON, GOVERNOR

OFFICE OF ADMINISTRATION
DIVISION OF FACILITIES MANAGEMENT
DESIGN AND CONSTRUCTION

NEW PAVILION

MISSOURI STATE FAIRGROUNDS,
2503 W. 16TH STREET
SEDALIA, MO 65301

PROJECT # F2001-01
SITE # 1501

FACILITY # 3511501143

REVISION:
DATE:
REVISION:
DATE:
REVISION:
DATE:

ISSUE DATE: 11/15/2019

CAD DWG FILE:
DRAWN BY:
CHECKED BY:
DESIGNED BY:

SHEET TITLE:

ROOF PLAN

SHEET NUMBER:

A-102

SHEET 6 OF 31

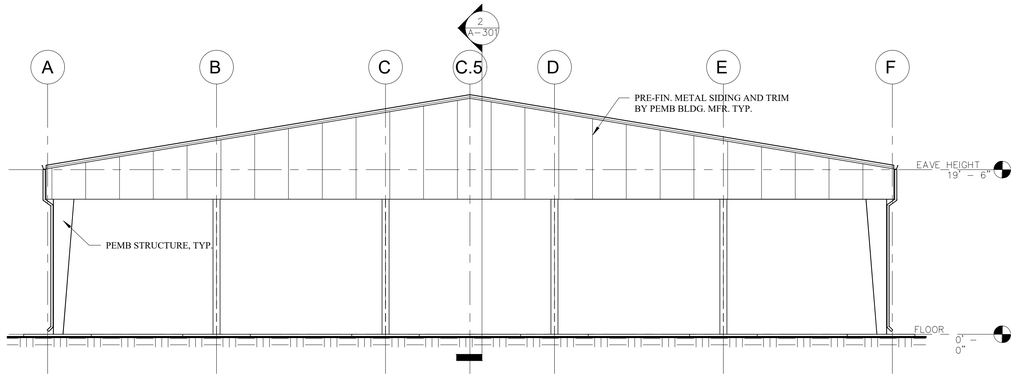

4 A-201 NORTH ELEVATION 1/8" = 1'-0"

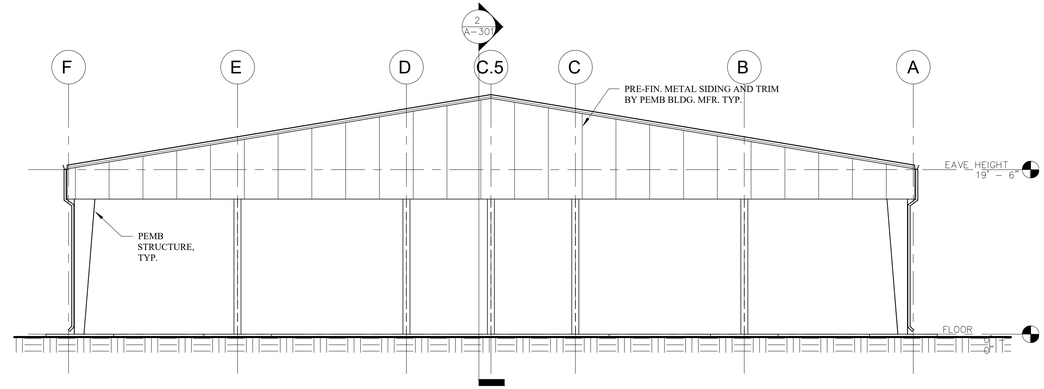

2 A-201 SOUTH ELEVATION 1/8" = 1'-0"

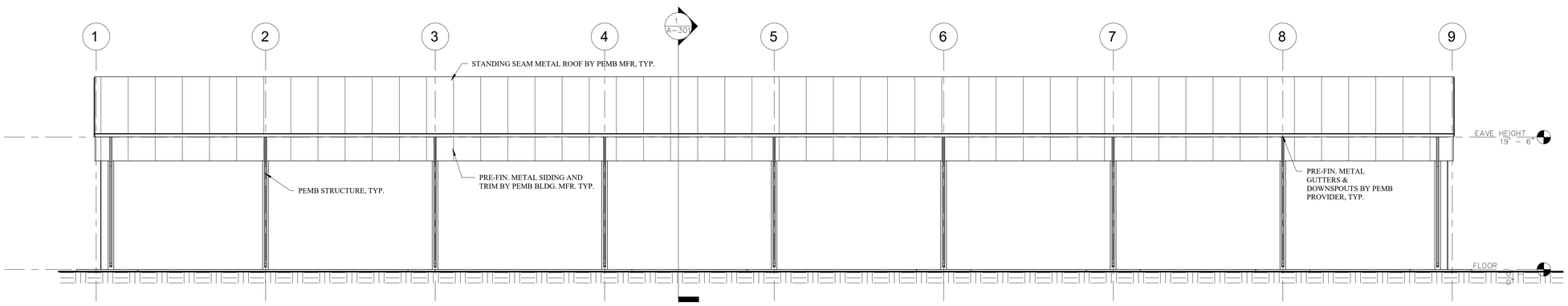

1 A-201 WEST ELEVATION 1/8" = 1'-0"

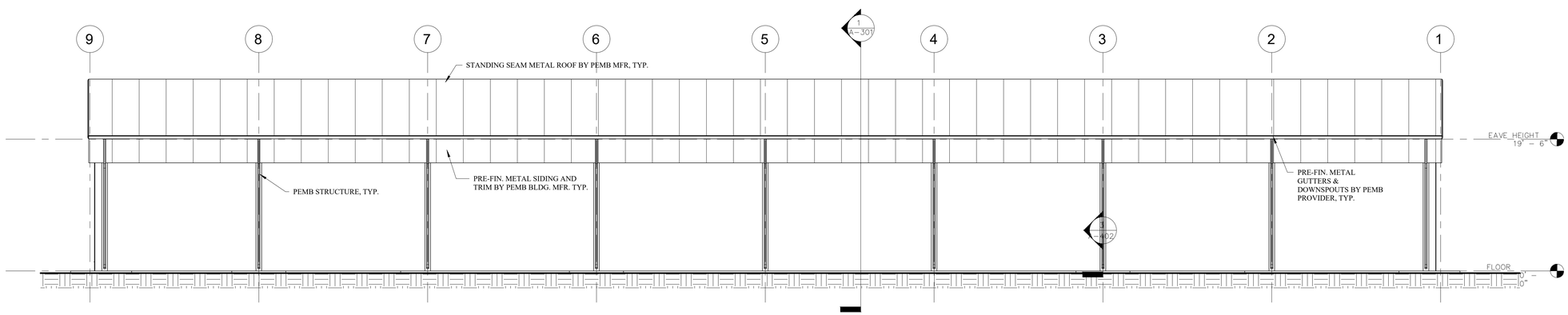

3 A-201 EAST ELEVATION 1/8" = 1'-0"

STATE OF MISSOURI
MICHAEL L. PARSON ,
GOVERNOR

OFFICE OF ADMINISTRATION
DIVISION OF FACILITIES MANAGEMENT
DESIGN AND CONSTRUCTION

NEW PAVILION

MISSOURI STATE FAIRGROUNDS,
2503 W. 16TH STREET
SEDALIA, MO 65301

PROJECT # F2001-01
SITE # 1501
FACILITY # 3511501143

REVISION:
DATE:
REVISION:
DATE:
REVISION:
DATE:
ISSUE DATE: 11/15/2019

CAD DWG FILE:
DRAWN BY:
CHECKED BY:
DESIGNED BY:

SHEET TITLE:

EXTERIOR ELEVATIONS

SHEET NUMBER:

A-201

SHEET 7 OF 31

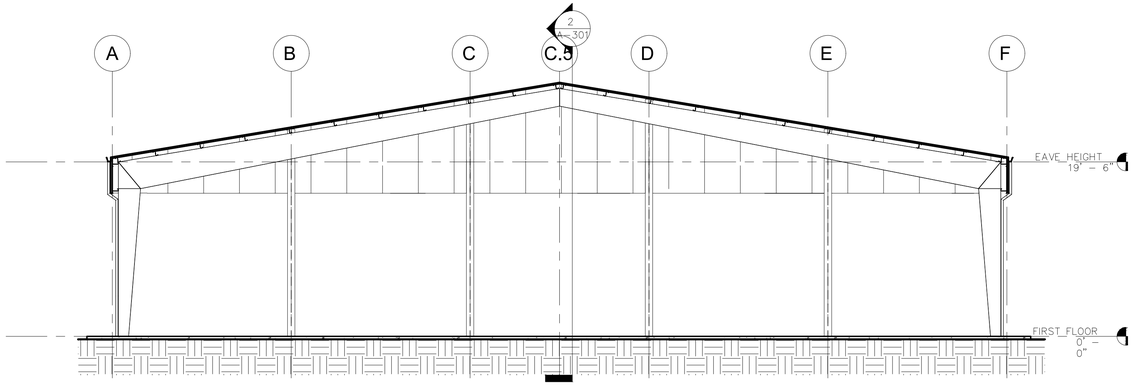

1 A-301 BUILDING SECTION 1
1/8" = 1'-0"

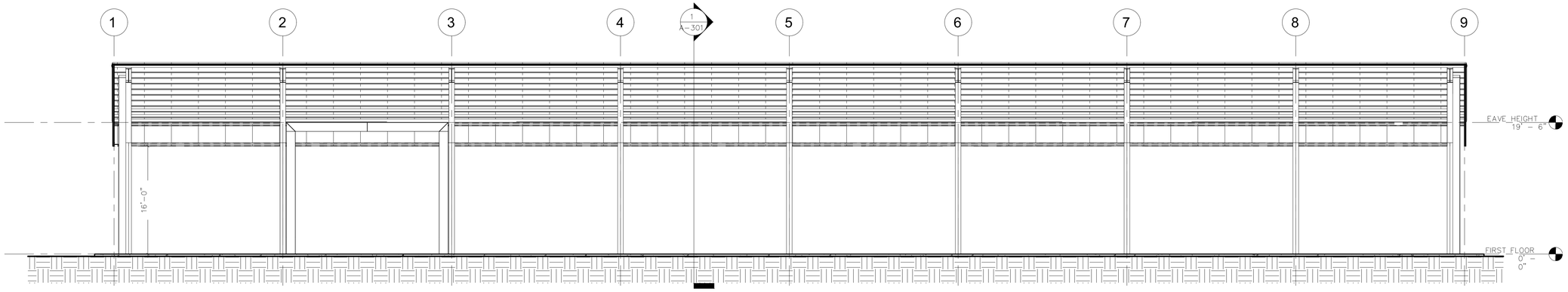

2 A-301 BUILDING SECTION 2
1/8" = 1'-0"

STATE OF MISSOURI
MICHAEL L. PARSON ,
GOVERNOR

OFFICE OF ADMINISTRATION
DIVISION OF FACILITIES
MANAGEMENT
DESIGN AND CONSTRUCTION

NEW PAVILION

MISSOURI STATE
FAIRGROUNDS,
2503 W. 16TH STREET
SEDALIA, MO 65301

PROJECT # F2001-01
SITE # 1501

FACILITY # 3511501143

REVISION:
DATE:
REVISION:
DATE:
REVISION:
DATE:

ISSUE DATE: 11/15/2019

CAD DWG FILE:
DRAWN BY:
CHECKED BY:
DESIGNED BY:

SHEET TITLE:

BUILDING SECTIONS

SHEET NUMBER:

A-301

SHEET 8 OF 31

GENERAL NOTES

ELEVATION DATUM
SEE ARCHITECTURAL DRAWINGS OR SITE PLAN FOR FINISH FLOOR ELEVATIONS

DESIGN SPECIFICATIONS
2018 INTERNATIONAL BUILDING CODE

EARTHWORK
EARTHWORK OPERATIONS SHALL BE PERFORMED UNDER THE DIRECTION OF A PROFESSIONAL TESTING AGENCY TO ASSURE COMPLIANCE WITH THE RECOMMENDATIONS OF THE SOILS REPORT.

CONCRETE

CONCRETE WORK SHALL CONFORM TO ALL REQUIREMENTS OF THE CURRENT ACI 301, SPECIFICATIONS FOR STRUCTURAL CONCRETE FOR BUILDINGS, ACI 318 BUILDING CODE REQUIREMENTS FOR STRUCTURAL CONCRETE, ACI 305 SPECIFICATIONS FOR HOT WATER CONCRETE, AND ACI 306 SPECIFICATIONS FOR COLD WEATHER CONCRETE, WITH THE FOLLOWING ADDITIONAL REQUIREMENTS:

1. CONCRETE SHALL DEVELOP THE FOLLOWING 28-DAY MINIMUM COMPRESSIVE STRENGTH:
   FOUNDATIONS – 3,000 PSI
   CAST-IN-PLACE WALLS – 3,500 PSI
   FLOOR SLAB – 4,000 PSI
   EXTERIOR SLABS, WALLS AND CURBS – 4,000 PSI
2. ALL FOOTINGS SHALL BEAR ON UNDISTURBED SOIL OR ENGINEERED FILL.
3. CHLORIDE- BASED ADMIXTURES ARE PROHIBITED IN ALL REINFORCED CONCRETE.
4. REINFORCING STEEL SHALL CONFORM TO ASTM A615, A616, OR A617, GRADE 60.
5. ALL CONTINUOUS REINFORCING STEEL THAT MEETS AT A CORNER SHALL BE TIED TOGETHER WITH A CORNER BAR THAT HAS SUFFICIENT LAP DISTANCE IN EACH DIRECTION
6. CONTINUOUS REINFORCING BARS LAP LENGTH SHALL BE A MINIMUM OF 48 BAR DIAMETERS UNLESS NOTED OTHERWISE
7. CONCRETE SLUMP SHALL BE A MAXIMUM OF 4" +/- 1" (ASTM C- 143) AS DELIVERED IN THE FIELD. CONTRACTOR MAY USE CHEMICAL ADMIXTURES TO ATTAIN A MAXIMUM SLUMP OF 8" FOR WORKABILITY. NO WATER MAY BE ADDED TO THE CONCRETE MIX ON SITE UNLESS WATER IS WITHHELD AT THE BATCHING FACILITY. IF WATER IS WITHHELD AT THE BATCHING FACILITY IT SHOULD BE REFLECTED ON THE LOAD TICKET. THE TOTAL AMOUNT OF WATER IN THE MIX SHALL NOT EXCEED WHAT IS NOTED ON THE APPROVED MIXED. THIS SHALL BE NOTED IN THE SPECIAL INSPECTOR'S RECORDS.
8. CONCRETE EXPOSED TO WEATHER, VEHICLES, AND/OR DEICING CHEMICALS SHALL BE AIR-ENTRAINED WITH 6% (+/-) 1.5% ENTRAINED AIR BY VOLUME AT POINT OF DISCHARGE. DO NOT ALLOW AIR CONTENT OF TROWELED FINISHED FLOORS TO EXCEED 3%.
9. SUBMIT CONCRETE MIX PROPORTIONS PRIOR TO START OF WORK. DO NOT BEGIN CONCRETE PRODUCTION UNTIL MIXES HAVE BEEN REVIEWED AND ARE ACCEPTABLE TO THE ENGINEER.
10. READY MIX CONCRETE SHALL COMPLY WITH REQUIREMENTS OF ASTM C94.
11. CONCRETE WORK EXECUTION
    A. CONSTRUCT FORMS TO CORRECT SIZE, SHAPE, ALIGNMENT, ELEVATION AND POSITION; AND TO SUPPORT VERTICAL AND LATERAL LOADS.
    B. POSITION, SUPPORT, AND SECURE REINFORCEMENT AGAINST DISPLACEMENT. MINIMUM CONCRETE COVER FOR REINFORCEMENT SHALL BE, UNLESS NOTED OTHERWISE ON THE DRAWINGS:
       CAST AGAINST AND EXPOSED TO EARTH.....3 INCHES
       EXPOSED TO EARTH OR WEATHER.....2 INCHES
       NOT EXPOSED TO WEATHER OR
       IN CONTACT WITH EARTH.....1 ½ INCHES
    C. PROVIDE CONTROL JOINTS IN SLABS-ON-GRADE AT NOT GREATER THAN 15 FEET ON CENTER IN EACH DIRECTION. SAW CUT CONTROL JOINTS MINIMUM ¼ OF SLAB DEPTH, AS SOON AFTER SLAB FINISHING WITHOUT DISLODGING AGGREGATE.
    D. STEEL TROWEL FINISH ALL INTERIOR CONCRETE SLABS, BROOM FINISH ALL EXTERIOR CONCRETE SLABS.
    E. CURE ALL CONCRETE IN COMPLIANCE WITH ACI 301, USING A LIQUID TYPE MEMBRANE, NON-RESIDUAL, CURING COMPOUND COMPLYING WITH ASTM C309. ASSURE COMPATIBILITY WITH FINISH FLOOR COVERING.

PRE-ENGINEERED STEEL BUILDING STRUCTURE

1. DESIGN, FABRICATION, AND ERECTION OF STRUCTURAL STEEL SHALL BE IN ACCORDANCE WITH THE CURRENT EDITION OF THE AISC SPECIFICATIONS FOR STRUCTURAL STEEL BUILDINGS, THE AISC SPECIFICATIONS FOR THE DESIGN OF COLD FORMED STEEL STRUCTURAL MEMBERS, THE AISC CODE OF STANDARD PRACTICE FOR STEEL BUILDINGS AND BRIDGES, AND CURRENT OSHA STANDARDS.
2. ALL STRUCTURAL AND MISCELLANEOUS STEEL ITEMS SHALL RECEIVE ONE COAT OF RUST INHIBITIVE PRIMER/PAINT.
3. ALL WELDING SHALL BE DONE BY QUALIFIED WELDERS IN ACCORDANCE WITH THE CURRENT EDITION OF THE AWS STRUCTURAL WELDING CODE.
4. THIS STEEL STRUCTURE SHALL BE DESIGNED IN ACCORDANCE WITH THE 2018 IBC.
5. PER IBC TABLE 1604.3 ROOF MEMBERS SHALL BE DESIGNED AND CONSTRUCTED FOR A MAXIMUM TOTAL LOAD DEFLECTION OF L/120 AND L/180 LIVE LOAD, WALL GIRTS SHALL BE DESIGNED FOR A MAXIMUM TOTAL LOAD DEFLECTION OF L/120 WITHOUT BRICK AND TOTAL FRAME DEFLECTION SHALL BE LIMITED TO H/60. (ALL DEFLECTIONS BASED ON SERVICE WIND LOAD)
6. LOADING DESIGN DATA SHALL BE AS FOLLOWS:

6.1. ROOF LOADINGS:

6.1.1.	LIVE LOAD	20 PSF
6.1.2.	COLLATERAL LOAD	5 PSF
6.1.3.	DEAD LOAD	STRUCTURE WEIGHT

6.2. SNOW LOAD (DRIFTING AND SLIDING SNOW IN ADDITION TO UNIFORM LOAD):

6.2.1.	Pg=	20 PSF
6.2.2.	Is=	1.0

6.3. SEISMIC DESIGN DATA:

6.3.1.	OCCUPANCY CATEGORY	III
6.3.2.	SITE CLASSIFICATION	D (ASSUMED)
6.3.3.	Ie =	1.0
6.3.4.	Ss =	0.137
6.3.5.	S1 =	0.084

6.4. WIND LOADINGS:

6.4.1.	V =	115 MPH (3-SECOND GUST)
6.4.2.	Iw =	1.0
6.4.3.	EXPOSURE =	C

7. SUBMITTALS SHALL INCLUDE THE FOLLOWING:
   a. SHOP DRAWINGS PREPARED UNDER THE SUPERVISION OF, AND SIGNED AND SEALED BY A PROFESSIONAL ENGINEER REGISTERED IN THE STATE OF MISSOURI INCLUDING ANCHOR PLAN AND DETAILS.
   b. DESIGN LOADS FOR FOUNDATION AND ANCHOR DESIGN INCLUDING VERTICAL, HORIZONTAL, AND LATERAL LOADS AT EACH COLUMN BASE.

SPECIAL INSPECTIONS

THE FOLLOWING ITEMS REQUIRE SPECIAL INSPECTION IN ACCORDANCE WITH CHAPTER 17 OF THE INTERNATIONAL BUILDING CODE.

a. CONCRETE GROUT DESIGN MIX (PERIODIC)
b. PLACING OF CONCRETE AND REINFORCING STEEL (CONTINUOUS OF CONCRETE SAMPLING / PERIODIC OF REINFORCING)
c. BOLTS & ANCHORS EMBEDDED IN CONCRETE (PERIODIC)
d. STRUCTURAL STEEL FABRICATIONS (UNLESS AISC APPROVED) (PERIODIC)
e. STRUCTURAL STEEL BOLTING & WELDING (PERIODIC)
f. POST INSTALLED ANCHORS IN CONCRETE (CONTINUOUS)
g. IN-SITU SOILS, EXCAVATIONS, FILLING & COMPACTION (PERIODIC)

THE CONTRACTOR SHALL REQUEST SPECIAL INSPECTION OF THE ITEMS LISTED ABOVE PRIOR TO THOSE ITEMS BECOMING INACCESSIBLE AND UNOBSERVABLE DUE TO PROGRESSION OF THE WORK.

**** SLAB AND FOUNDATIONS SHOWN ARE ONLY CONCEPTUAL. CONTRACTOR TO PROVIDE ENGINEERED FOUNDATION AND SLAB DESIGN TO OWNER FOR REVIEW AND APPROVAL. ****

INDEX OF SHEETS

COVER / GENERAL STRUCTURAL DATA	S100
FOUNDATION PLAN	S200
FOUNDATION DETAILS	S210

STATE OF MISSOURI
MICHAEL L. PARSON ,
GOVERNOR

OFFICE OF ADMINISTRATION
DIVISION OF FACILITIES MANAGEMENT
DESIGN AND CONSTRUCTION

NEW PAVILION

MISSOURI STATE FAIRGROUNDS,
2503 W. 16TH STREET
SEDALIA, MO 65301

PROJECT # F2001-01
SITE # 1501
FACILITY # 3511501143

REVISION:
DATE:
REVISION:
DATE:
REVISION:
DATE:
ISSUE DATE: 11/15/2019

CAD DWG FILE:
DRAWN BY:
CHECKED BY:
DESIGNED BY:

SHEET TITLE:

STRUCTURAL NOTES

SHEET NUMBER:

S-100

NOTE:
ALL DIMENSIONS TO STEEL LINE, EDGE OF SLAB & ℄ OF FOOTING, UNLESS NOTED OTHERWISE.

HAIRPIN KEY

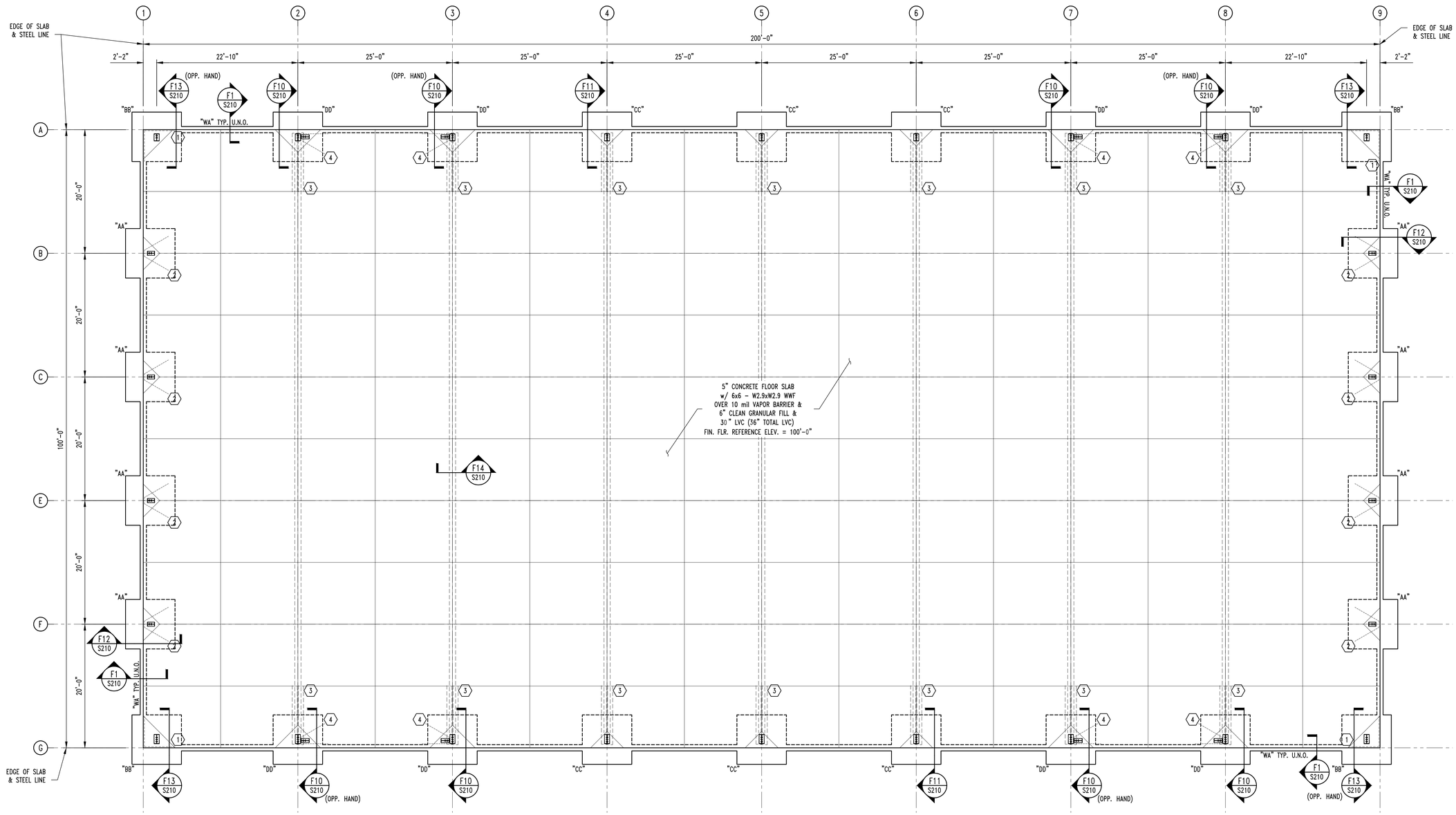

1 S200 **FOUNDATION PLAN**
SCALE: 1/8" = 1'-0"

PLAN NORTH

**** SLAB AND FOUNDATIONS SHOWN ARE ONLY CONCEPTUAL. CONTRACTOR TO PROVIDE ENGINEERED FOUNDATION AND SLAB DESIGN TO OWNER FOR REVIEW AND APPROVAL. ****

FOOTING SCHEDULE

MARK	WIDTH (W)	LENGTH (L)	DEPTH (D)	REINFORCING
"AA"	3'-0" SQ.	---	3'-0"	4 - #5 x 2'-6" EACH WAY, TOP & BOTTOM
"BB"	7'-0" SQ.	---	3'-0"	8 - #5 x 6'-6" EACH WAY, TOP & BOTTOM
"CC"	8'-0" SQ.	---	3'-0"	9 - #5 x 7'-6" EACH WAY, TOP & BOTTOM
"DD"	10'-0" SQ.	---	3'-0"	11 - #5 x 9'-6" EACH WAY, TOP & BOTTOM
"WA"	1'-0"	CONT.	3'-0"	3 - #5 CONTINUOUS

STATE OF MISSOURI
MICHAEL L. PARSON,
GOVERNOR

OFFICE OF ADMINISTRATION
DIVISION OF FACILITIES MANAGEMENT,
DESIGN AND CONSTRUCTION

730 TRUMAN BUILDING
JEFFERSON CITY, MO 65102
POST OFFICE BOX 809
301 WEST HIGH STREET

NEW PAVILION

MISSOURI STATE FAIRGROUNDS
2503 W. 16TH STREET
SEDALIA, MO 65301

PROJECT # F2001-01
SITE # 1501
FACILITY # 3511501143

REVISION:
DATE:
REVISION:
DATE:
REVISION:
DATE:
ISSUE DATE: 11/15/2019

CAD DWG FILE:
DRAWN BY:
CHECKED BY:
DESIGNED BY:

SHEET TITLE:
FOUNDATION PLAN

SHEET NUMBER:
S-200

Xref: \Titleblock.dwg

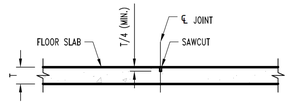

CONTRACTION JOINT

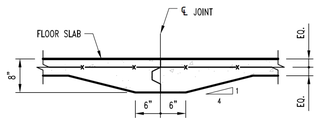

CONSTRUCTION JOINT

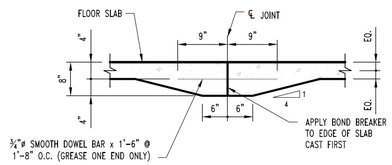

CONSTRUCTION JOINT

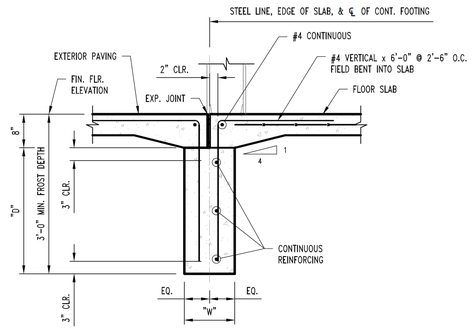

F1 S200 CONTINUOUS FOOTING SECTION

SCALE: ¾" = 1'-0"

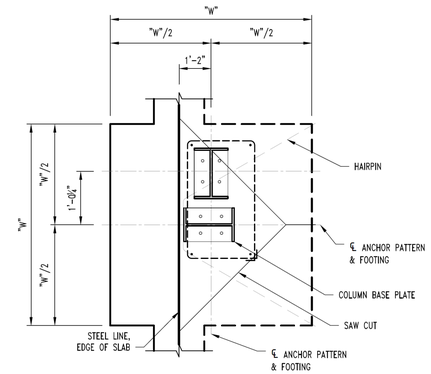

PLAN VIEW

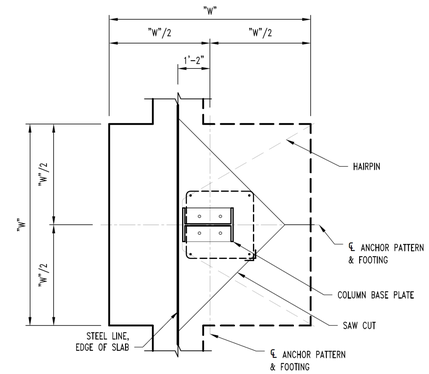

PLAN VIEW

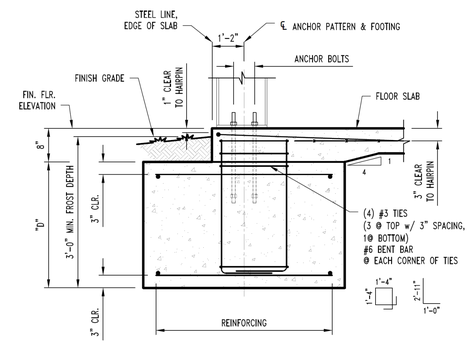

F10 S200 COLUMN FOOTING SECTION

SCALE: ¾" = 1'-0"

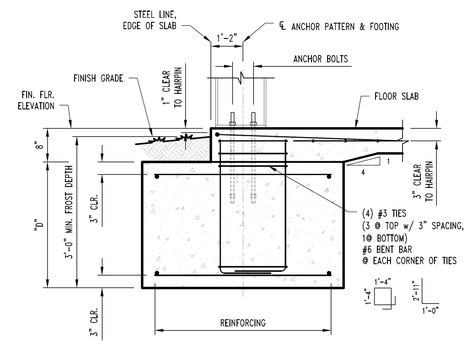

F11 S200 COLUMN FOOTING SECTION

SCALE: ¾" = 1'-0"

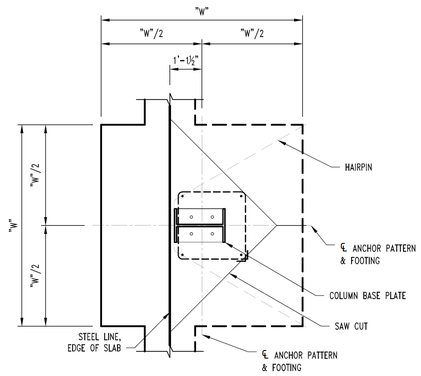

PLAN VIEW

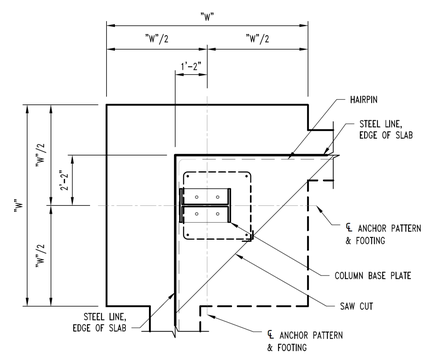

PLAN VIEW

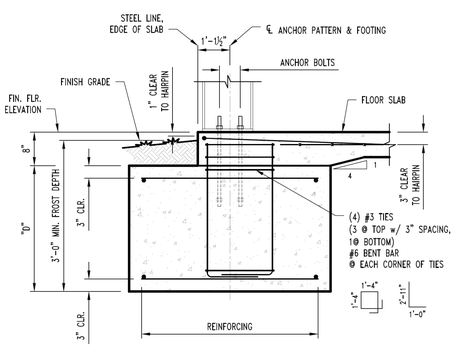

F12 S200 COLUMN FOOTING SECTION

SCALE: ¾" = 1'-0"

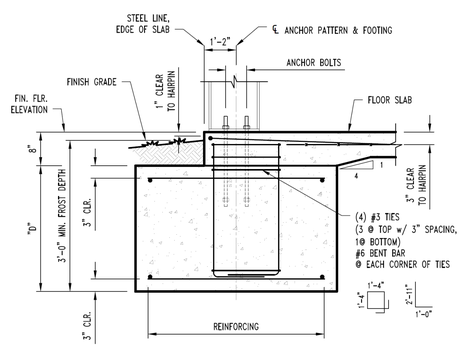

F13 S200 COLUMN FOOTING SECTION

SCALE: ¾" = 1'-0"

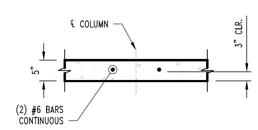

F14 S200 TIE BEAM SECTION

SCALE: ¾" = 1'-0"

**** SLAB AND FOUNDATIONS SHOWN ARE ONLY CONCEPTUAL. CONTRACTOR TO PROVIDE ENGINEERED FOUNDATION AND SLAB DESIGN TO OWNER FOR REVIEW AND APPROVAL. ****

STATE OF MISSOURI
MICHAEL L. PARSON,
GOVERNOR

OFFICE OF ADMINISTRATION
DIVISION OF FACILITIES MANAGEMENT,
DESIGN AND CONSTRUCTION

730 TRUMAN BUILDING
JEFFERSON CITY, MO 65102
POST OFFICE BOX 809
301 WEST HIGH STREET

NEW PAVILION

MISSOURI STATE FAIRGROUNDS
2503 W. 16TH STREET
SEDALIA, MO 65301

PROJECT # F2001-01
SITE # 1501
FACILITY # 3511501143

REVISION:
DATE:
REVISION:
DATE:
REVISION:
DATE:
ISSUE DATE: 11/15/2019

CAD DWG FILE:
DRAWN BY:
CHECKED BY:
DESIGNED BY:

SHEET TITLE:

FOUNDATION DETAILS

SHEET NUMBER:

S-210

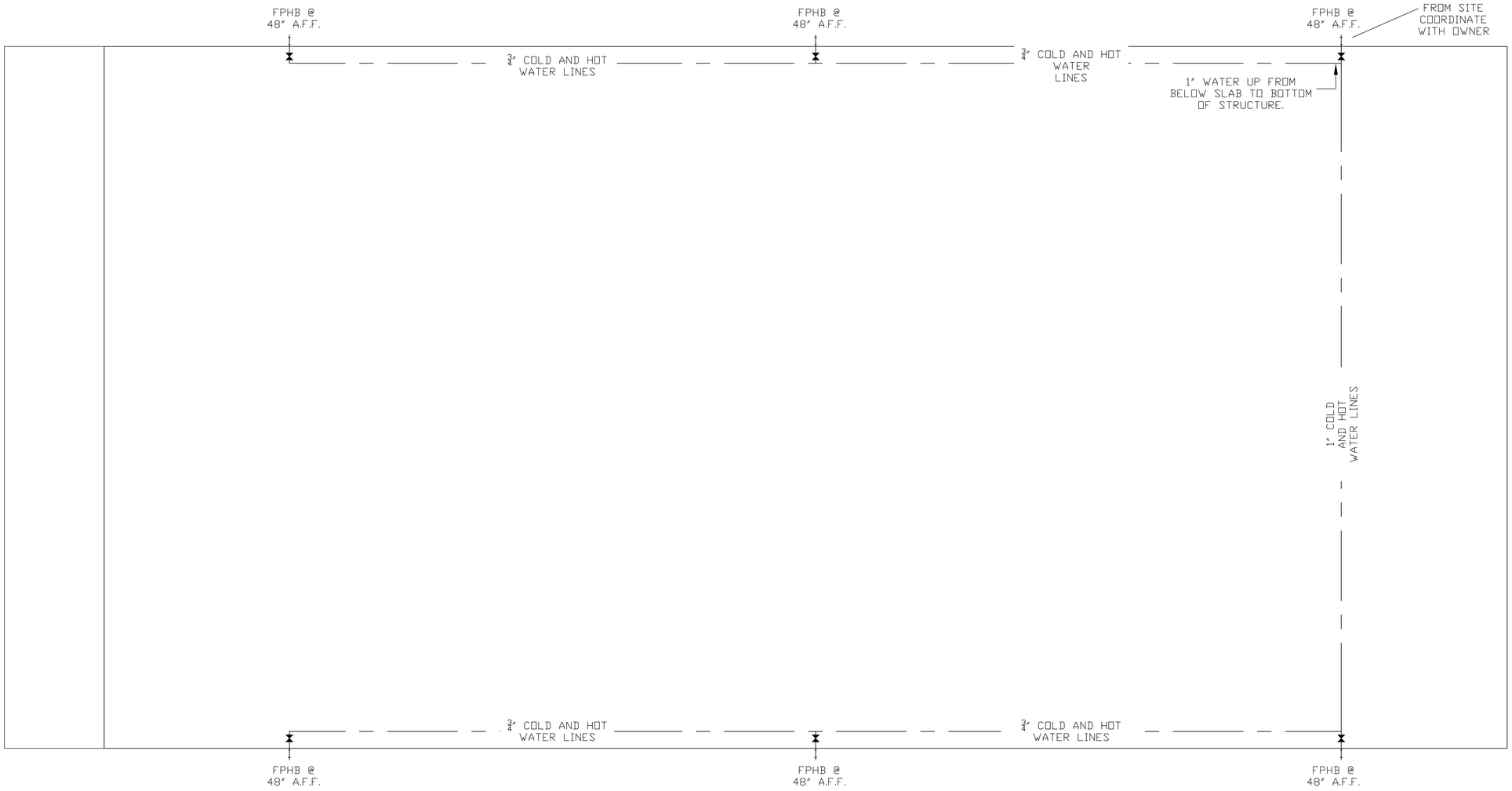

1 P-100

PLUMBING PLAN

SCALE: 1/8" = 1'-0"

GENERAL NOTES

1. REFER TO SHEET P500 FOR ADDITIONAL PLUMBING DETAILS, SCHEDULES, ETC.

STATE OF MISSOURI
MICHAEL L. PARSON,
GOVERNOR

OFFICE OF ADMINISTRATION
DIVISION OF FACILITIES MANAGEMENT,
DESIGN AND CONSTRUCTION

730 TRUMAN BUILDING
JEFFERSON CITY, MO 65102
POST OFFICE BOX 809
301 WEST HIGH STREET

NEW PAVILION

MISSOURI STATE FAIRGROUNDS
2503 W. 16TH STREET
SEDALIA, MO 65301

PROJECT # F2001-01
SITE # 1501
FACILITY # 3511501143

REVISION:
DATE:
REVISION:
DATE:
REVISION:
DATE:
ISSUE DATE: 11/15/2019

CAD DWG FILE:
DRAWN BY:
CHECKED BY:
DESIGNED BY:

SHEET TITLE:

PLUMBING SITE PLAN

SHEET NUMBER:

P-100

12 OF 31 SHEETS

PLUMBING SPECIFICATIONS

1. GENERAL
   1.1. PLUMBING CONTRACTOR IS RESPONSIBLE TO PROVIDE ALL SUPPLY LINES TO PROVIDE A COMPLETE SYSTEM AT EACH FIXTURE INDICATED ON PLANS UNLESS NOTED OTHERWISE.

2. DOMESTIC WATER
   2.1. COPPER WATER PIPING BELOW GRADE SHALL BE TYPE "K". BELOW GRADE JOINTS SHALL BE SILVER SOLDERED. THERE SHALL BE NO JOINTS IN WATER PIPING LOCATED BENEATH BUILDING SLAB.
   2.2. COPPER WATER PIPING ABOVE GRADE SHALL BE TYPE "L".
   2.3. PROVIDE WATER HAMMER ARRESTORS AT ALL QUICK-CLOSE VALVES. FIXTURES REQUIRING WATER HAMMER ARRESTORS INCLUDE BUT ARE NOT LIMITED TO FLUSH VALVES, SENSOR FAUCETS, AND WASHING MACHINE BOXES. AIR CHAMBERS ARE NOT ACCEPTABLE.
   2.4.
   2.5. DOMESTIC WATER PIPING INSULATION
      2.5.1. ALL HW PIPING, WHETHER COPPER OR PEX, SHALL BE INSULATED WITH PLENUM RATED CLOSED CELL ELASTOMERIC INSULATION. FOR PIPING LESS THAN 1½", INSULATION THICKNESS TO BE 1". FOR PIPING 1½" OR GREATER, INSULATION THICKNESS SHALL BE 1½".
      2.5.2. CW COPPER PIPING TO INSULATED WITH ½" PLENUM RATED CLOSED CELL ELASTOMERIC INSULATION. CW PEX NEED NOT BE INSULATED UNLESS NOTED OTHERWISE.

PLUMBING FIXTURE SCHEDULE

TAG	DESCRIPTION	MANUFACTURER (OR EQUAL)	MODEL (OR EQUAL)	NOTES
FPHB	FROST PROOF HOSE BIBB	WOODFORD	MODEL 67	

NOTES:
1. VERIFY NECESSARY FIXTURES MEET ADA REQUIREMENTS WITH ARCHITECT PRIOR TO INSTALLATION

PLUMBING CONNECTION SIZING SCHEDULE

FIXTURE		SANITARY PIPING		SUPPLY PIPING	
TYPE	TYPICAL ABBREVIATION	WASTE CONNECTION	VENT CONNECTION	COLD WATER CONNECTION	HOT WATER CONNECTION
DRINKING FOUNTAIN	DF	1-1/2"	1-1/4"	1/2"	-
FLOOR DRAIN	FD	3"	2"	-	-
HAND / HAIR SINK	HS / SK	2"	1-1/4"	1/2"	1/2"
HOSE BIBB	HB	-	-	3/4"	-
LAVATORY	LAV	1-1/2"	1-1/4"	1/2"	1/2"
MOP SINK	MS	3"	1-1/2"	1/2"	1/2"
ICE MAKER OUTLET BOX	REF	-	-	1/2"	-
SHOWER	SH	3"	1-1/2"	1/2"	1/2"
URINAL	UR	2"	1-1/4"	3/4"	-
WATER CLOSET (FLUSH TANK)	WC	3"	2"	1/2"	-
WATER CLOSET (FLUSH VALVE)	WC	3"	2"	1"	-

NOTES:
1. SIZES SHOWN ABOVE ARE TYPICAL UNLESS NOTED OTHERWISE ON PLANS

STATE OF MISSOURI
MICHAEL L. PARSON,
GOVERNOR

OFFICE OF ADMINISTRATION
DIVISION OF FACILITIES MANAGEMENT,
DESIGN AND CONSTRUCTION

730 TRUMAN BUILDING
JEFFERSON CITY, MO 65102
POST OFFICE BOX 809
301 WEST HIGH STREET

NEW PAVILION

MISSOURI STATE FAIRGROUNDS
2503 W. 16TH STREET
SEDALIA, MO 65301

PROJECT # F2001-01
SITE # 1501
FACILITY # 3511501143

REVISION:
DATE:
REVISION:
DATE:
REVISION:
DATE:
ISSUE DATE: 11/15/2019

CAD DWG FILE:
DRAWN BY:
CHECKED BY:
DESIGNED BY:

SHEET TITLE:
PLUMBING SPECS & SCHEDULES

SHEET NUMBER:
P-500

AMERICAN BUILDINGS COMPANY
A NUCOR COMPANY

PROJECT NUMBER:	P1378-019
PROJECT NAME:	MO State Fair
PROJECT LOCATION:	Sedalia, MO COUNTY: Pettis
CUSTOMER:	Nucor Sedalia Sedalia, MO

MBMA MEMBER

iAS ACCREDITED AC 472

NOTES AND SPECIFICATIONS

BUILDING ERECTION NOTES

1) THE GENERAL CONTRACTOR AND/OR ERECTOR IS RESPONSIBLE TO SAFELY AND PROPERLY ERECT THE METAL BUILDING SYSTEM IN CONFORMANCE WITH THESE DRAWINGS, OSHA REQUIREMENTS, AND MBMA STANDARDS PERTAINING TO PROPER ERECTION. THIS INCLUDES, BUT IS NOT LIMITED TO, THE CORRECT USE OF TEMPORARY GUYS AND BRACING WHERE NEEDED FOR SQUARING, PLUMBING, AND SECURING THE STRUCTURAL AND SECONDARY FRAMING. SECONDARY WALL FRAMING MEMBERS (GIRTS OR BAR JOISTS) ARE NOT DESIGNED TO FUNCTION AS A WORK PLATFORM OR PROVIDE SAFETY TIE OFF ATTACHMENT IN ACCORDANCE WITH OSHA REQUIREMENTS. SECONDARY ROOF FRAMING MEMBERS (PURLINS OR BAR JOISTS) ARE NOT DESIGNED TO PROVIDE SAFETY TIE OFF ATTACHMENT IN ACCORDANCE WITH OSHA REQUIREMENTS.

2) ALL HIGH STRENGTH BOLTS ARE TYPE ASTM A325 AND ARE TO BE INSTALLED TO THE "SNUG-TIGHT" CONDITION AS DEFINED BY THE RCSC SPECIFICATION FOR STRUCTURAL JOINTS USING A325 OR A490 BOLTS, 2004 EDITION, SECTION 8.1, UNLESS NOTED OTHERWISE. ALSO, NOTE THAT BOLTS IN STANDARD HOLES DO NOT REQUIRE WASHERS PER THE RCSC SPECIFICATION FOR STRUCTURAL JOINTS USING A325 OR A490 BOLTS, SECTION 6.

3) ALL A307 MACHINE BOLTS ARE TO BE BROUGHT TO A "SNUG TIGHT" CONDITION TO ENSURE THAT THE MATERIALS IN THE JOINT ARE BROUGHT INTO GOOD CONTACT WITH EACH OTHER.

4) WASHERS ARE REQUIRED AT ALL SLOTTED CONNECTIONS AS FOLLOWS:
=HOLE TO SLOT CONNECTION, ONE WASHER REQUIRED ON SLOTTED SIDE.
=SLOT TO SLOT CONNECTION, TWO WASHERS REQUIRED, ONE ON EACH SIDE OF THE CONNECTION. HOWEVER AT LAPPED ZEE MEMBERS, WHETHER PURLINS OR GIRTS, NO WASHERS ARE REQUIRED IN THE 8-BOLT LAPPED REGION.

5) THE METAL BUILDING SUPPLIER SHALL BE NOTIFIED PRIOR TO ANY FIELD MODIFICATIONS. MODIFICATIONS SHALL BE APPROVED BY THE METAL BUILDING SUPPLIER BEFORE WORK IS UNDERTAKEN.

6) ALL WELDING MUST BE PERFORMED BY AWS QUALIFIED WELDERS FOR THE WELDING PROCESSES AND POSITIONS INDICATED. ALL WORK MUST BE COMPLETED AND INSPECTED IN ACCORDANCE WITH THE APPLICABLE AWS SPECIFICATIONS. WELD ELECTRODES USED FOR THE SMAW (OR STICK) WELD PROCESS MUST BE 70 KSI STEEL AND LOW HYDROGEN CONTENT.

7) COMMON ABBREVIATIONS:

a) TYP UNO-TYPICAL UNLESS NOTED OTHERWISE	f) SIM.-SIMILAR
b) SLV-SHORT LEG VERTICAL	g) NIC-NOT IN CONTRACT
c) LLV-LONG LEG VERTICAL	h) SL-STEEL LINE
d) NS & FS-NEAR SIDE AND FAR SIDE	i) N/A-NOT APPLICABLE
e) O.A.L.-OVERALL LENGTH	j) MBS-METAL BUILDING SUPPLIER

8) CONSTRUCTION LOADS SHALL NOT BE PLACED ON ANY STRUCTURAL STEEL FRAMEWORK UNLESS SUCH FRAMEWORK IS SAFELY BOLTED, WELDED, OR OTHERWISE ADEQUATELY SECURED.

9) PURLINS AND GIRTS SHALL NOT BE USED AS AN ANCHORAGE POINT FOR A FALL ARREST SYSTEM UNLESS WRITTEN APPROVAL IS OBTAINED FROM THE METAL BUILDING SUPPLIER.

10) PURLINS MAY ONLY BE USED AS A WALKING/WORKING SURFACE WHEN INSTALLING SAFETY SYSTEMS, AFTER ALL PERMANENT BRIDGING HAS BEEN INSTALLED AND FALL PROTECTION IS PROVIDED.

11) CONSTRUCTION LOADS MAY BE PLACED ONLY WITHIN A ZONE THAT IS WITHIN 8 FEET OF THE CENTER-LINE OF THE PRIMARY SUPPORT MEMBER. CFR BUNDLES SHOULD BE PLACED DIRECTLY OVER THE RIGID FRAMES.

12) ALL LIFTING DEVICES MUST MEET OSHA OR MSHA STANDARDS AND IN NO CASE IS IT ACCEPTABLE TO USE STRUCTURAL MEMBERS SUPPLIED BY THE MBS AS A SPREADER BAR OR LIFTING DEVICE.

GENERAL DESIGN NOTES AND MATERIAL SPECIFICATIONS

1) ALL STRUCTURAL STEEL SECTIONS AND WELDED PLATE MEMBERS ARE DESIGNED IN ACCORDANCE WITH THE AISC "SPECIFICATIONS FOR STRUCTURAL STEEL BUILDINGS-ALLOWABLE STRESS DESIGN", NINTH EDITION, OR THE AISC "SPECIFICATIONS FOR STRUCTURAL STEEL BUILDINGS", THIRTEENTH EDITION, AS REQUIRED BY THE SPECIFIED BUILDING CODE.

2) ALL WELDING OF STRUCTURAL STEEL IS BASED ON AWS D1.1 "STRUCTURAL WELDING CODE", LATEST EDITION.

3) ALL COLD FORMED MEMBERS ARE DESIGNED IN ACCORDANCE WITH AISI "SPECIFICATIONS FOR THE DESIGN OF COLD FORMED STEEL STRUCTURAL MEMBERS", LATEST EDITION.

4) ALL WELDING OF COLD FORMED STEEL IS BASED ON AWS D1.3 "STRUCTURAL WELDING CODE - SHEET STEEL", LATEST EDITION.

5) IF JOISTS ARE INCLUDED WITH THIS PROJECT, THEY ARE SUPPLIED AS A PART OF THE SYSTEMS-ENGINEERED METAL BUILDING AND ARE FABRICATED IN ACCORDANCE WITH THE REQUIREMENTS OF SECTION 1926.758 OF THE OSHA SAFETY STANDARD FOR STEEL ERECTION, DATED JANUARY 18, 2001.

6) MATERIAL SPECIFICATIONS:

PLATE AND FLANGE MATERIAL:	
5"-12" WIDE & THRU 1" THICK	A529, GRADE 55
OTHERS	A572 GRADE 50 OR A36
BUILT-UP STRUCTURAL WEB MATERIAL	A1011 SS (OR HSLAS CL1) GR 55
HOT-ROLLED STRUCTURAL	A36 OR A572 GRADE 50 OR A992 GRADE 50
STRUCTURAL TUBE	A500 GRADE C (46 KSI)
STRUCTURAL PIPE	A500 GRADE B (42 KSI)
COLD-FORMED STRUCTURAL	A1011 OR A1039 SS (OR HSLAS CL1) GR 55
RPB ROOF PANELS	A792 GRADE 80
STANDING SEAM ROOF PANELS	A792 GRADE 50, CLASS 1
R-PANEL AND A-PANEL SIDING	A653 GRADE 80, CLASS 1 OR A792 GRADE 80, CLASS 1
ROD BRACING	A529 GRADE 50
CABLE BRACING	A475 COATING CLASS A, GRADE EHS, 7-WIRE
WELDS	AWS D1.1 LATEST EDITION
HIGH-STRENGTH BOLTS	A325 TYPE 1 HEAVY HEX OR A490 TYPE 1 HEAVY HEX
MACHINE BOLTS	A-307 GRADE A HEX

PROJECT LOADS

DESIGN CODE: IBC 2018 BUILDING END USE: 4A

ROOF LIVE LOAD: 20 PSF MBMA OCC. CLASS: III - Substantial Hazard

GROUND SNOW LOAD: 20 PSF SNOW EXP. FACTOR, Ce: 1

SNOW IMPORTANCE FACTOR, Is: 1.1

WIND: 120 WIND IMPORTANCE FACTOR, Iw: 1.15

EXPOSURE: C WITHIN HURRICANE COASTLINE ☐ YES ☒ NO

UL 90 ☐ YES ☒ NO RAIN INTENSITY (in/hr) 7

SEISMIC INFORMATION Ss:0.158, S1:0.076

Design Sds/Sd1: Site Class: D

Seismic Imp. Factor Ie: 1.25 Seismic Design Category:

Analysis Procedure: Equivalent Lateral Force Method

Basic SFRS:

NOTES:

1) COLLATERAL DEAD LOADS, UNLESS OTHERWISE NOTED, ARE ASSUMED TO BE UNIFORMLY DISTRIBUTED. WHEN SUSPENDED SPRINKLER SYSTEMS, LIGHTING, HVAC EQUIPMENT, CEILINGS, ETC., ARE SUSPENDED FROM ROOF MEMBERS, CONSULT THE M.B.S. IF THESE CONCENTRATED LOADS EXCEED 200 POUNDS, OR IF INDIVIDUAL MEMBERS ARE LOADED SIGNIFICANTLY MORE THAN OTHERS.

2) THE DESIGN OF STRUCTURAL MEMBERS SUPPORTING GRAVITY LOADS IS CONTROLLED BY THE MORE CRITICAL EFFECT OF ROOF LIVE LOAD OR ROOF SNOW LOAD, AS DETERMINED BY THE APPLICABLE CODE.

	BUILDING
	Event Pavillion
ROOF DEAD (PSF):	2.6
PRI. COL. (PSF):	5
SEC. COL. (PSF):	5
SNOW Ct:	1.2
SNOW Cs:	
ROOF SNOW (PSF):	22
WIND ENCLOSURE:	Enclosed
GCpi:	
SEISMIC R:	
SEISMIC Cs:	
BASE SHEAR (KIPS):	

** THE FOLLOWING ARE PRELIMINARY DRAWINGS PROVIDED BY NUCOR FOR BIDDING PURPOSES. THE FINAL DRAWINGS FROM NUCOR SHALL BE SUBMITTED TO OWNER FOR APPROVAL. **

STATE OF MISSOURI
MICHAEL L. PARSON,
GOVERNOR

OFFICE OF ADMINISTRATION
DIVISION OF FACILITIES MANAGEMENT
DESIGN AND CONSTRUCTION

NEW PAVILION

MISSOURI STATE FAIRGROUNDS,
2503 W. 16TH STREET
SEDALIA, MO 65301

PROJECT # F2001-01
SITE # 1501
FACILITY # 3511501143

REVISION:
DATE:
REVISION:
DATE:
REVISION:
DATE:
ISSUE DATE: 11/15/2019

CAD DWG FILE:
DRAWN BY:
CHECKED BY:
DESIGNED BY:

SHEET TITLE:

SHEET NUMBER:

NU-100

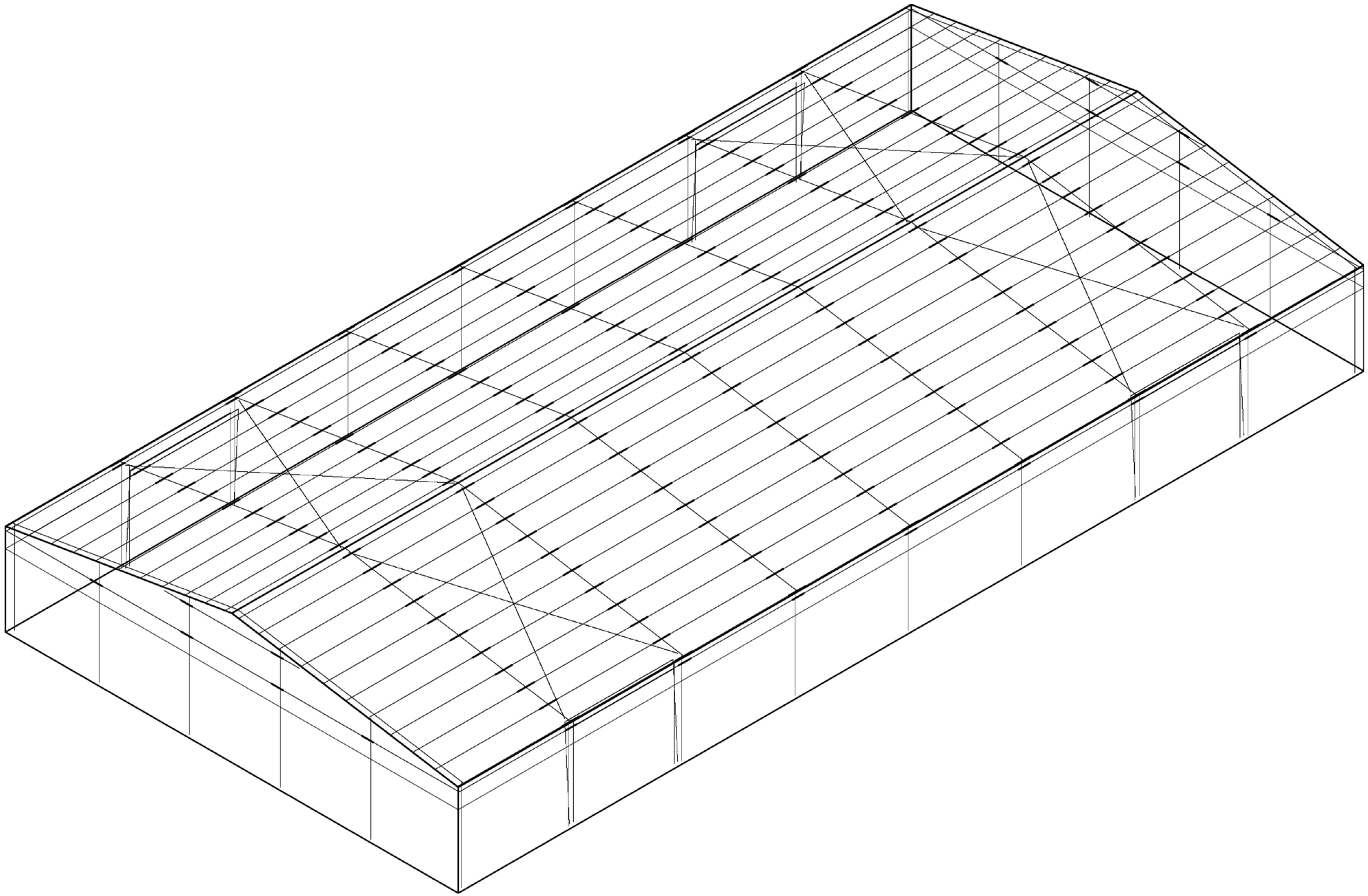

STATE OF MISSOURI
MICHAEL L. PARSON ,
GOVERNOR

OFFICE OF ADMINISTRATION
DIVISION OF FACILITIES
MANAGEMENT
DESIGN AND CONSTRUCTION

NEW PAVILION

MISSOURI STATE
FAIRGROUNDS,
2503 W. 16TH STREET
SEDALIA, MO 65301

PROJECT # F2001-01
SITE # 1501

FACILITY # 3511501143

REVISION:
DATE:
REVISION:
DATE:
REVISION:
DATE:
ISSUE DATE: 11/15/2019

CAD DWG FILE:
DRAWN BY:
CHECKED BY:
DESIGNED BY:

SHEET TITLE:

3D VIEW

SHEET NUMBER:

NU-101

SHEET 15 OF 31

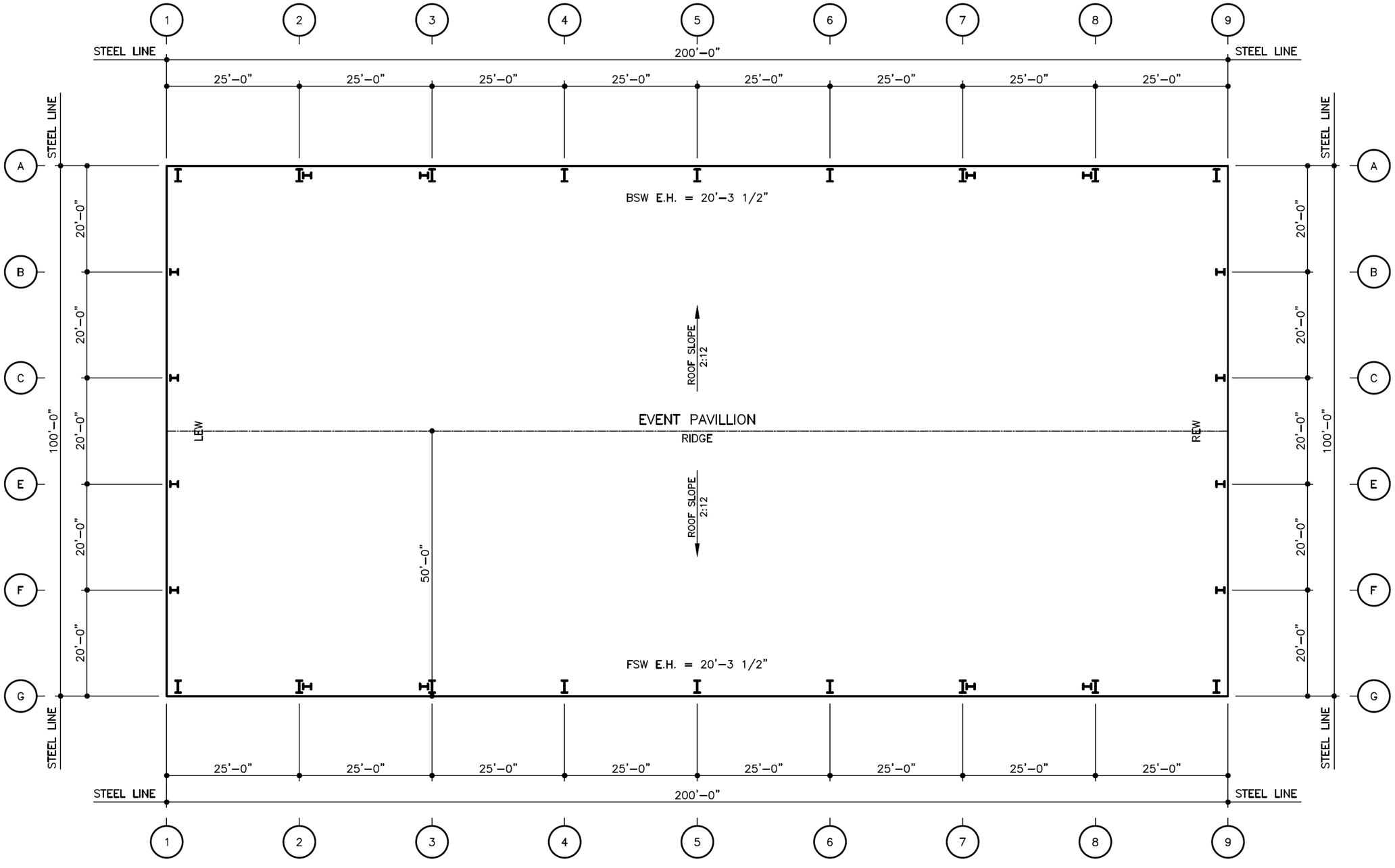

STATE OF MISSOURI
MICHAEL L. PARSON ,
GOVERNOR

OFFICE OF ADMINISTRATION
DIVISION OF FACILITIES
MANAGEMENT
DESIGN AND CONSTRUCTION

NEW PAVILION

MISSOURI STATE
FAIRGROUNDS,
2503 W. 16TH STREET
SEDALIA, MO 65301

PROJECT # F2001-01
SITE # 1501
FACILITY # 3511501143

REVISION:
DATE:
REVISION:
DATE:
REVISION:
DATE:
ISSUE DATE: 11/15/2019

CAD DWG FILE:
DRAWN BY:
CHECKED BY:
DESIGNED BY:

SHEET TITLE:

FLOOR PLAN

SHEET NUMBER:

NU-102

SHEET 16 OF 30

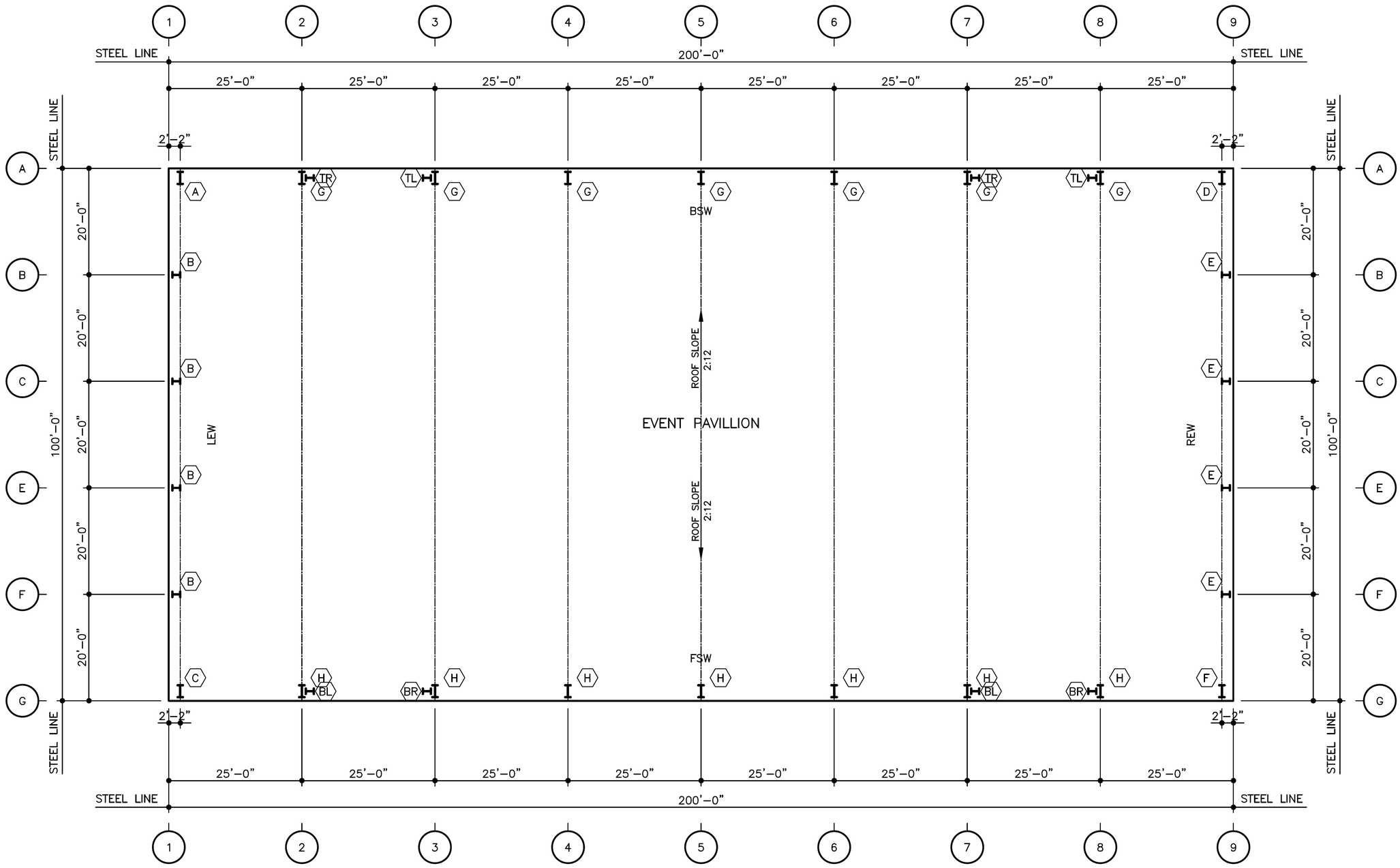

STATE OF MISSOURI
MICHAEL L. PARSON,
GOVERNOR

OFFICE OF ADMINISTRATION
DIVISION OF FACILITIES
MANAGEMENT
DESIGN AND CONSTRUCTION

NEW PAVILION

MISSOURI STATE
FAIRGROUNDS,
2503 W. 16TH STREET
SEDALIA, MO 65301

PROJECT # F2001-01
SITE # 1501

FACILITY # 3511501143

REVISION:
DATE:
REVISION:
DATE:
REVISION:
DATE:
ISSUE DATE: 11/15/2019

CAD DWG FILE:
DRAWN BY:
CHECKED BY:
DESIGNED BY:

SHEET TITLE:

FLOOR PLAN

SHEET NUMBER:

NU-103

SHEET 17 OF 31

ANCHOR BOLT PLAN

GENERAL NOTES:

1. THE SPECIFIED ANCHOR ROD DIAMETER ASSUMES F1554 GRADE 36 UNLESS NOTED OTHERWISE. ANCHOR ROD MATERIAL OF EQUAL DIAMETER MEETING OR EXCEEDING THE STRENGTH REQUIREMENTS SET FORTH ON THESE DRAWINGS MAY BE UTILIZED AT THE DISCRETION OF THE FOUNDATION DESIGN ENGINEER. ANCHOR ROD EMBEDMENT LENGTH SHALL BE DETERMINED BY THE FOUNDATION DESIGN ENGINEER.
2. AMERICAN BUILDINGS COMPANY IS NOT RESPONSIBLE FOR PROJECT FOUNDATION DESIGN. THE FOUNDATION DESIGN IS THE RESPONSIBILITY OF A REGISTERED PROFESSIONAL ENGINEER, FAMILIAR WITH LOCAL SITE CONDITIONS.
3. ALL ANCHOR RODS, FLAT WASHERS FOR ANCHOR RODS, EXPANSION BOLTS, AS WELL AS ALL CONCRETE/MASONRY EMBED PLATES ARE NOT BY AMERICAN BUILDINGS COMPANY.
4. THIS DRAWING IS NOT TO SCALE.
5. FINISHED FLOOR ELEVATION = 100'-0" UNLESS NOTED OTHERWISE.
6. "SINGLE" CEE COLUMNS SHALL BE ORIENTED WITH THE "TOES" TOWARD THE LOW EAVE UNLESS NOTED OTHERWISE.

ABNOTE

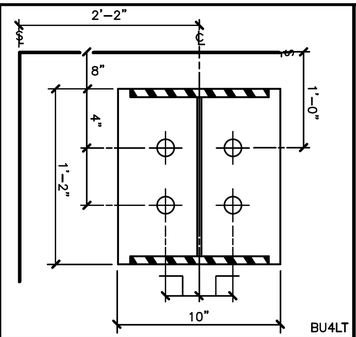

A — (4) 1 1/4" ø ANCHOR BOLTS WITH A 3" PROJECTION

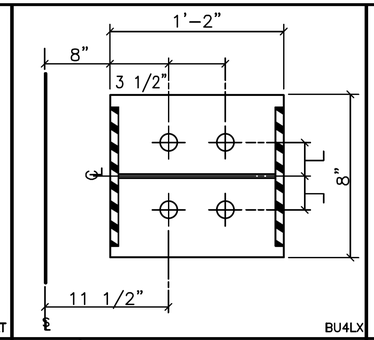

B — (4) 3/4" ø ANCHOR BOLTS WITH A 3" PROJECTION

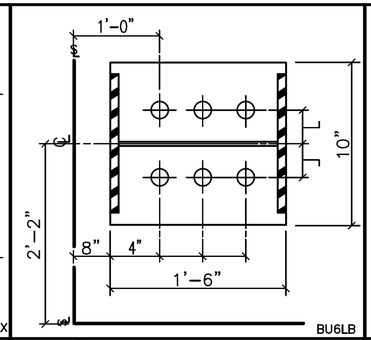

C — (6) 1 1/4" ø ANCHOR BOLTS WITH A 3" PROJECTION

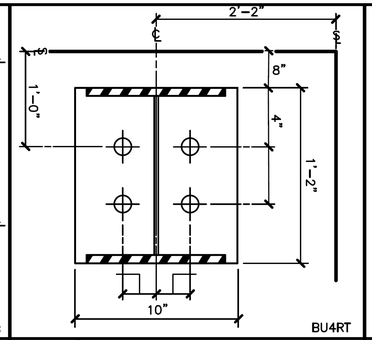

D — (4) 1 1/4" ø ANCHOR BOLTS WITH A 3" PROJECTION

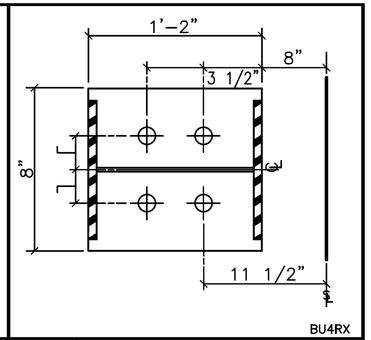

E — (4) 3/4" ø ANCHOR BOLTS WITH A 3" PROJECTION

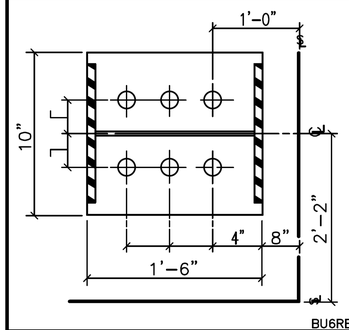

F — (6) 1 1/4" ø ANCHOR BOLTS WITH A 3" PROJECTION

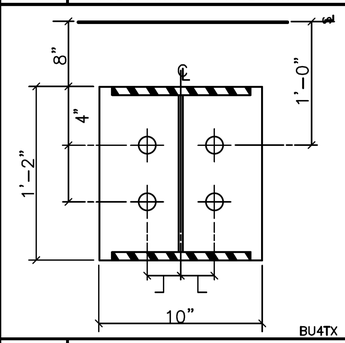

G — (4) 1 1/4" ø ANCHOR BOLTS WITH A 3" PROJECTION

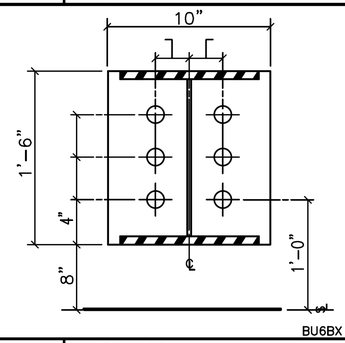

H — (6) 1 1/4" ø ANCHOR BOLTS WITH A 3" PROJECTION

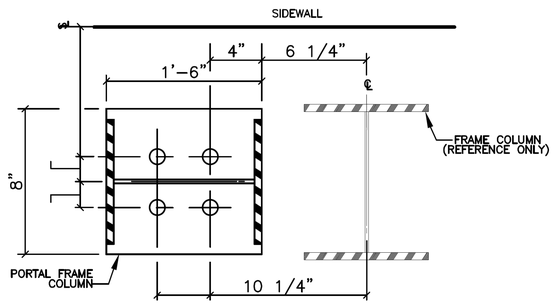

TL — PORTAL COLUMN — (4) 1" ø ANCHOR BOLTS WITH A 3" PROJECTION

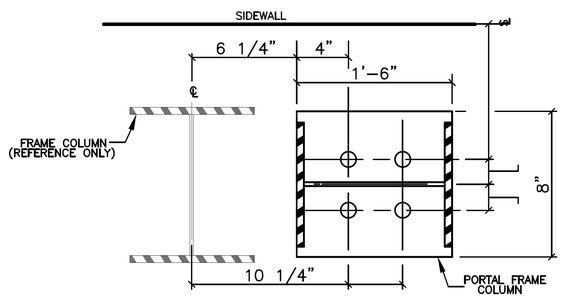

TR — PORTAL COLUMN — (4) 1" ø ANCHOR BOLTS WITH A 3" PROJECTION

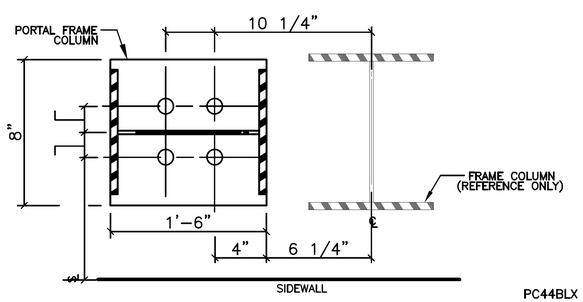

BR — PORTAL COLUMN — (4) 1" ø ANCHOR BOLTS WITH A 3" PROJECTION

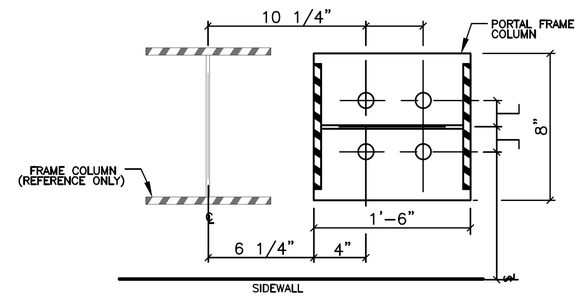

BL — PORTAL COLUMN — (4) 1" ø ANCHOR BOLTS WITH A 3" PROJECTION

STATE OF MISSOURI
MICHAEL L. PARSON,
GOVERNOR

OFFICE OF ADMINISTRATION
DIVISION OF FACILITIES MANAGEMENT
DESIGN AND CONSTRUCTION

NEW PAVILION

MISSOURI STATE FAIRGROUNDS,
2503 W. 16TH STREET
SEDALIA, MO 65301

PROJECT # F2001-01
SITE # 1501
FACILITY # 3511501143

REVISION:
DATE:
REVISION:
DATE:
REVISION:
DATE:
ISSUE DATE: 11/15/2019

CAD DWG FILE:
DRAWN BY:
CHECKED BY
DESIGNED BY:

SHEET TITLE:

DETAIL SHEET

SHEET NUMBER:

NU-104

SHEET 18 OF 31

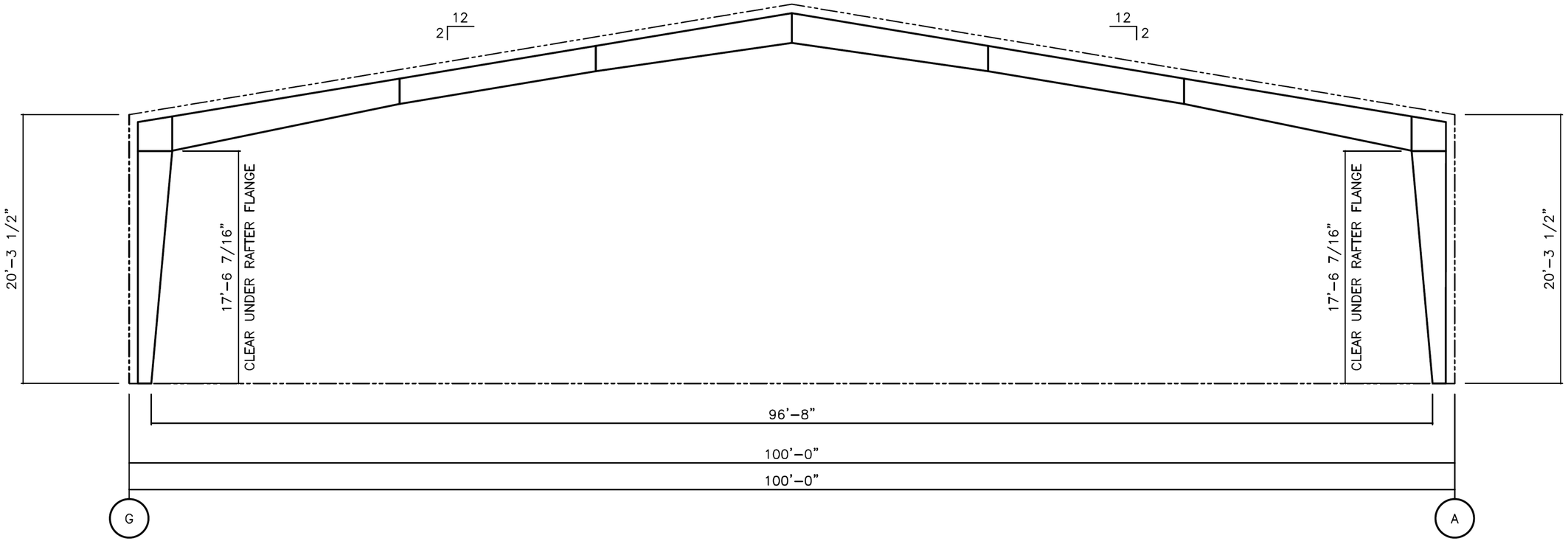

FRAME @ LINE(S) 1,9

*ALL CLEAR DIMENSIONS ARE SUBJECT TO CHANGE AT TIME OF FINAL DESIGN, UNLESS NOTED OTHERWISE IN THE SPECIAL USER NOTES SECTION.

STATE OF MISSOURI
MICHAEL L. PARSON ,
GOVERNOR

OFFICE OF ADMINISTRATION
DIVISION OF FACILITIES MANAGEMENT
DESIGN AND CONSTRUCTION

NEW PAVILION

MISSOURI STATE FAIRGROUNDS,
2503 W. 16TH STREET
SEDALIA, MO 65301

PROJECT # F2001-01
SITE # 1501
FACILITY # 3511501143

REVISION:
DATE:
REVISION:
DATE:
REVISION:
DATE:
ISSUE DATE: 11/15/2019

CAD DWG FILE:
DRAWN BY:
CHECKED BY:
DESIGNED BY:

SHEET TITLE:

FRAMING PLAN

SHEET NUMBER:

NU-105

SHEET 19 OF 31

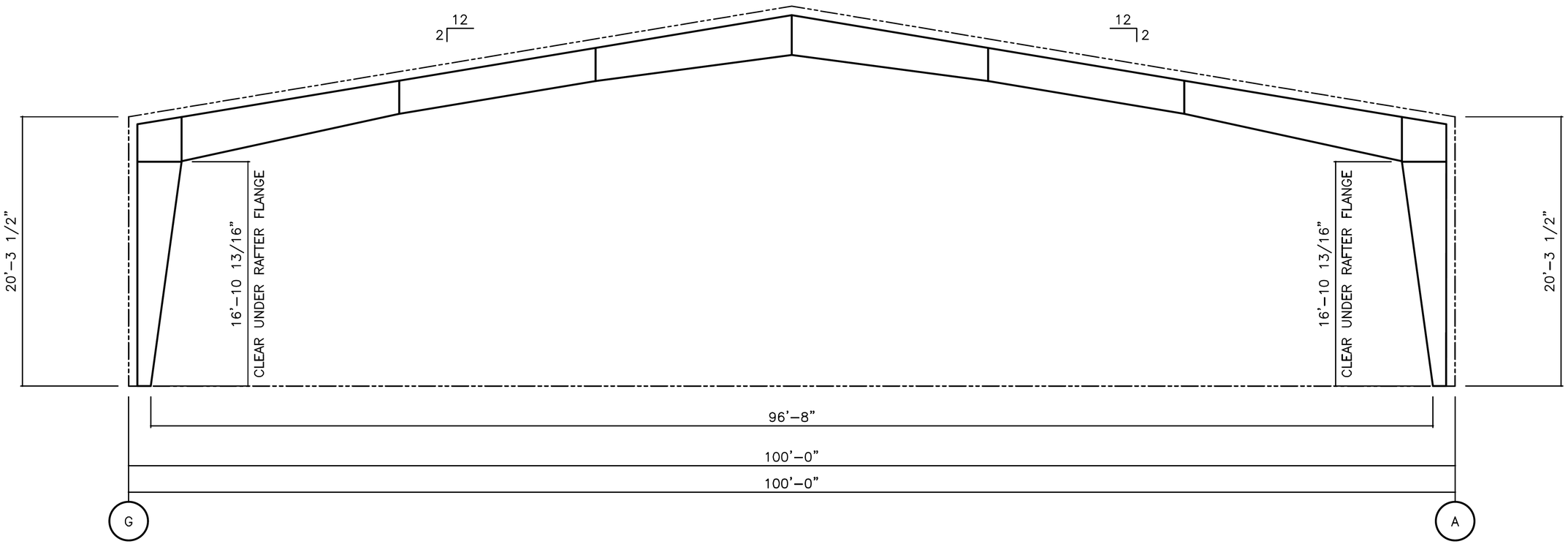

FRAME @ LINE(S) 2,3,4,5,6,7,8

*ALL CLEAR DIMENSIONS ARE SUBJECT TO CHANGE AT TIME OF FINAL DESIGN, UNLESS NOTED OTHERWISE IN THE SPECIAL USER NOTES SECTION.

STATE OF MISSOURI
MICHAEL L. PARSON ,
GOVERNOR

OFFICE OF ADMINISTRATION
DIVISION OF FACILITIES MANAGEMENT
DESIGN AND CONSTRUCTION

NEW PAVILION

MISSOURI STATE FAIRGROUNDS,
2503 W. 16TH STREET
SEDALIA, MO 65301

PROJECT # F2001-01
SITE # 1501

FACILITY # 3511501143

REVISION:
DATE:
REVISION:
DATE:
REVISION:
DATE:
ISSUE DATE: 11/15/2019

CAD DWG FILE:
DRAWN BY:
CHECKED BY:
DESIGNED BY:

SHEET TITLE:

FRAMING PLAN

SHEET NUMBER:

NU-106

SHEET 20 OF 31

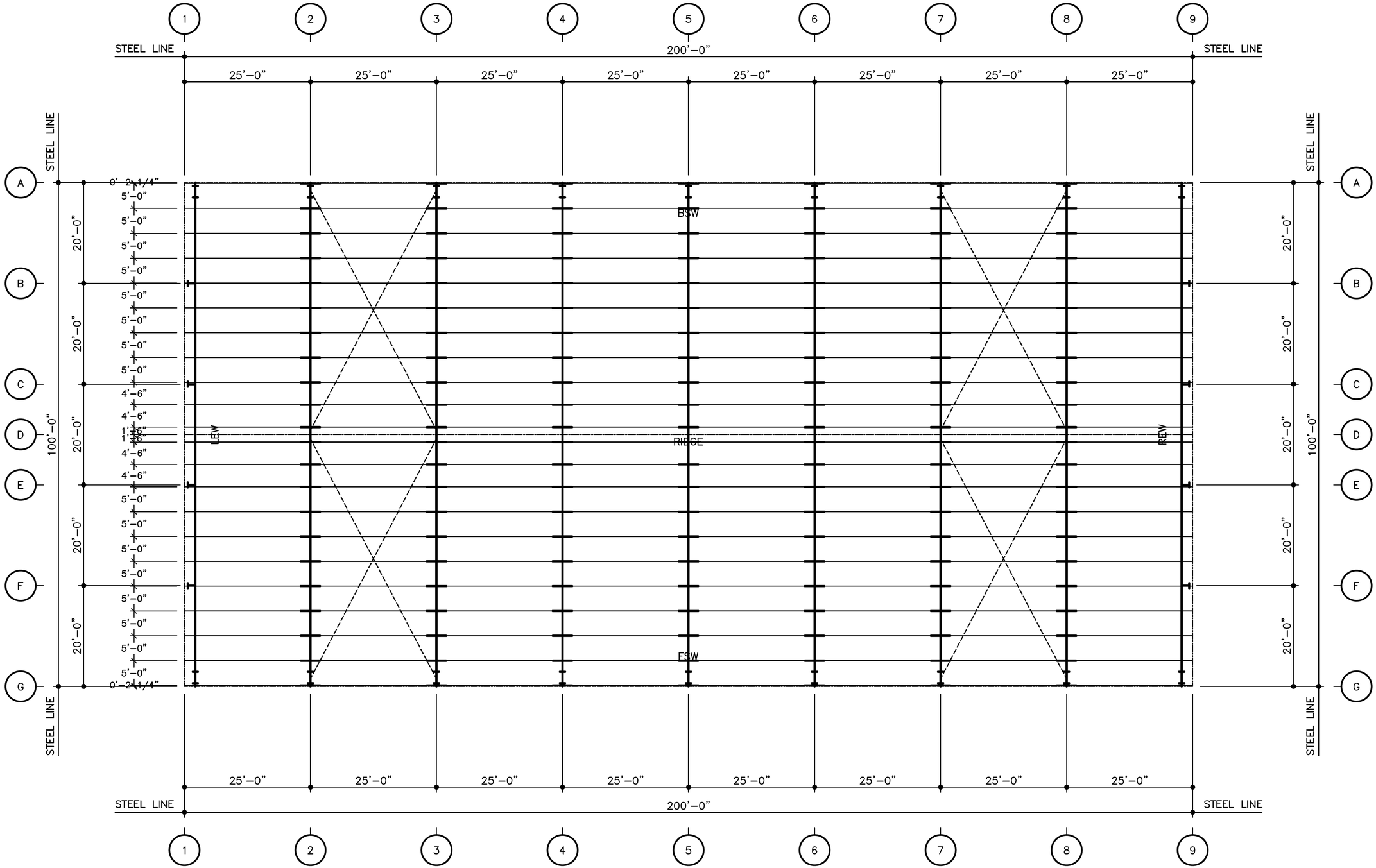

EVENT PAVILLION ROOF FRAMING PLAN

STATE OF MISSOURI
MICHAEL L. PARSON ,
GOVERNOR

OFFICE OF ADMINISTRATION
DIVISION OF FACILITIES
MANAGEMENT
DESIGN AND CONSTRUCTION

NEW PAVILION

MISSOURI STATE
FAIRGROUNDS,
2503 W. 16TH STREET
SEDALIA, MO 65301

PROJECT # F2001-01
SITE # 1501

FACILITY # 3511501143

REVISION:
DATE:
REVISION:
DATE:
REVISION:
DATE:
ISSUE DATE: 11/15/2019

CAD DWG FILE:
DRAWN BY:
CHECKED BY:
DESIGNED BY:

SHEET TITLE:

FRAMING PLAN

SHEET NUMBER:

NU-107

SHEET 21 OF 31

KEY PLAN

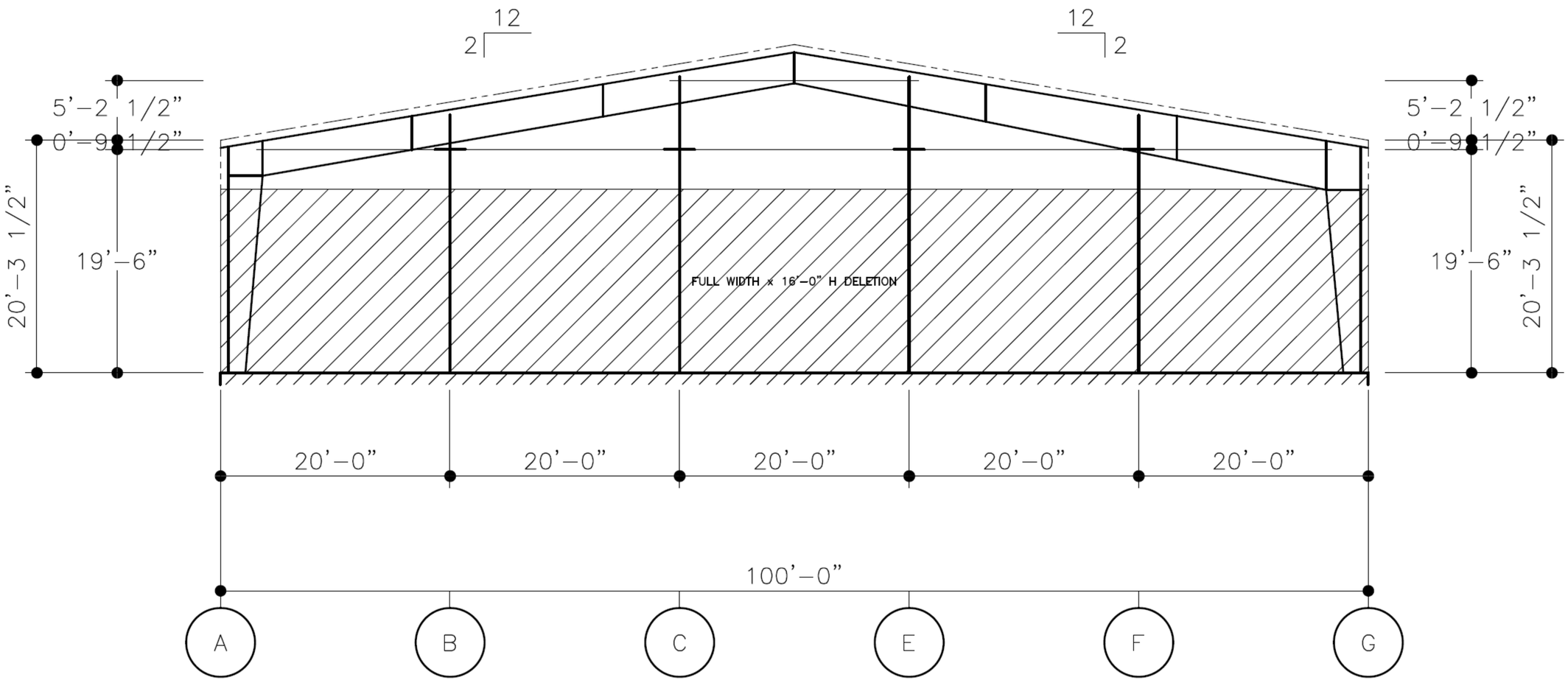

ELEVATION AT LINE 1

STATE OF MISSOURI
MICHAEL L. PARSON,
GOVERNOR

OFFICE OF ADMINISTRATION
DIVISION OF FACILITIES
MANAGEMENT
DESIGN AND CONSTRUCTION

NEW PAVILION

MISSOURI STATE
FAIRGROUNDS,
2503 W. 16TH STREET
SEDALIA, MO 65301

PROJECT # F2001-01
SITE # 1501
FACILITY # 3511501143

REVISION:
DATE:
REVISION:
DATE:
REVISION:
DATE:
ISSUE DATE: 11/15/2019

CAD DWG FILE:
DRAWN BY:
CHECKED BY:
DESIGNED BY:

SHEET TITLE:

SECTION VIEW

SHEET NUMBER:

NU-108

SHEET 22 OF 31

KEY PLAN

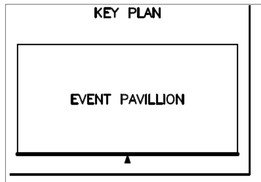

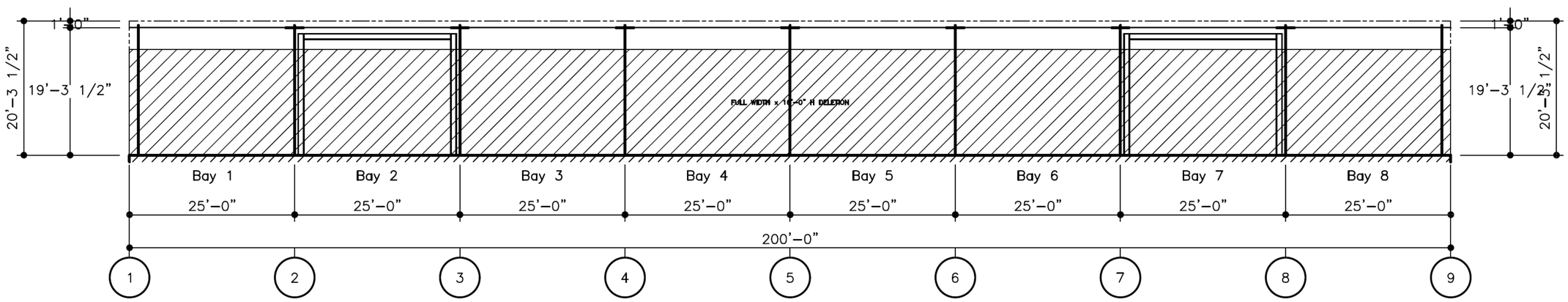

ELEVATION AT LINE G

STATE OF MISSOURI
MICHAEL L. PARSON ,
GOVERNOR

OFFICE OF ADMINISTRATION
DIVISION OF FACILITIES
MANAGEMENT
DESIGN AND CONSTRUCTION

NEW PAVILION

MISSOURI STATE
FAIRGROUNDS,
2503 W. 16TH STREET
SEDALIA, MO 65301

PROJECT # F2001-01
SITE # 1501

FACILITY # 3511501143

REVISION:
DATE:
REVISION:
DATE:
REVISION:
DATE:
ISSUE DATE: 11/15/2019

CAD DWG FILE:
DRAWN BY:
CHECKED BY:
DESIGNED BY:

SHEET TITLE:

SECTION VIEW

SHEET NUMBER:

NU-109

SHEET 23 OF 31

KEY PLAN

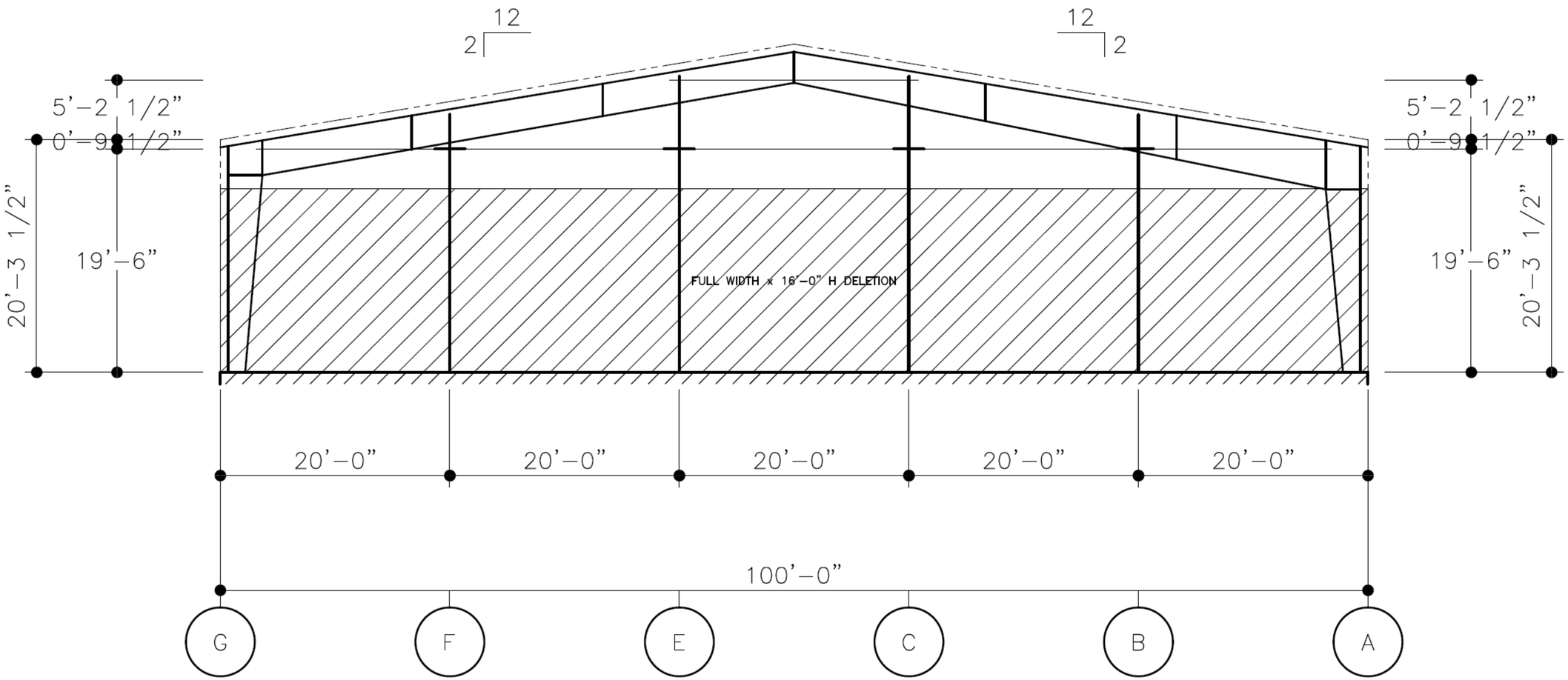

ELEVATION AT LINE 9

STATE OF MISSOURI
MICHAEL L. PARSON ,
GOVERNOR

OFFICE OF ADMINISTRATION
DIVISION OF FACILITIES
MANAGEMENT
DESIGN AND CONSTRUCTION

NEW PAVILION

MISSOURI STATE
FAIRGROUNDS,
2503 W. 16TH STREET
SEDALIA, MO 65301

PROJECT # F2001-01
SITE # 1501
FACILITY # 3511501143

REVISION:
DATE:
REVISION:
DATE:
REVISION:
DATE:
ISSUE DATE: 11/15/2019

CAD DWG FILE:
DRAWN BY:
CHECKED BY:
DESIGNED BY:

SHEET TITLE:

SECTION VIEW

SHEET NUMBER:

NU-110

SHEET 24 OF 31

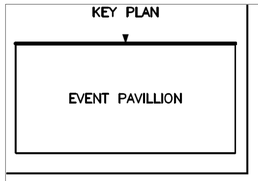

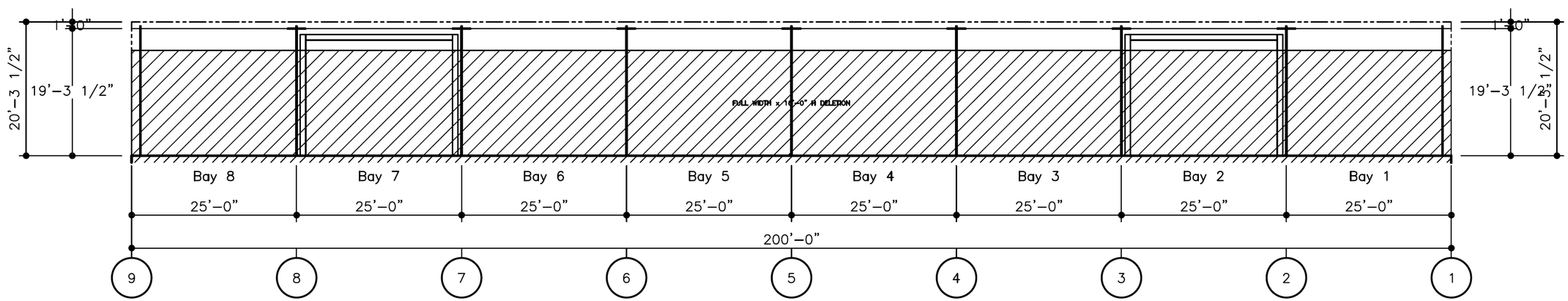

ELEVATION AT LINE A

STATE OF MISSOURI
MICHAEL L. PARSON ,
GOVERNOR

OFFICE OF ADMINISTRATION
DIVISION OF FACILITIES
MANAGEMENT
DESIGN AND CONSTRUCTION

NEW PAVILION

MISSOURI STATE
FAIRGROUNDS,
2503 W. 16TH STREET
SEDALIA, MO 65301

PROJECT # F2001-01
SITE # 1501

FACILITY # 3511501143

REVISION:
DATE:
REVISION:
DATE:
REVISION:
DATE:
ISSUE DATE: 11/15/2019

CAD DWG FILE:
DRAWN BY:
CHECKED BY:
DESIGNED BY:

SHEET TITLE:

SECTION VIEW

SHEET NUMBER:

NU-111

SHEET 25 OF 31

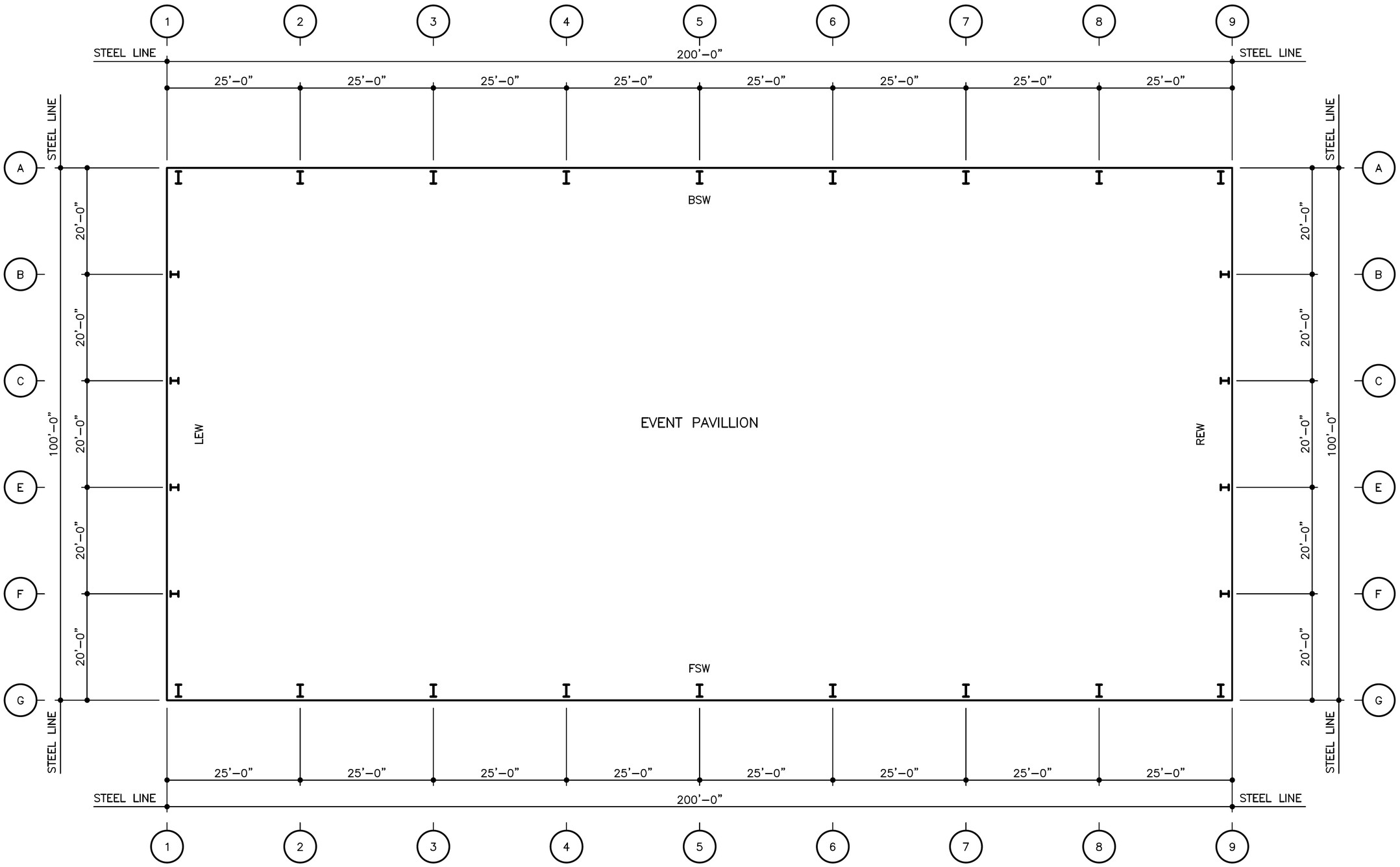

STATE OF MISSOURI
MICHAEL L. PARSON ,
GOVERNOR

OFFICE OF ADMINISTRATION
DIVISION OF FACILITIES
MANAGEMENT
DESIGN AND CONSTRUCTION

NEW PAVILION

MISSOURI STATE
FAIRGROUNDS,
2503 W. 16TH STREET
SEDALIA, MO 65301

PROJECT # F2001-01
SITE # 1501

FACILITY # 3511501143

REVISION:
DATE:
REVISION:
DATE:
REVISION:
DATE:
ISSUE DATE: 11/15/2019

CAD DWG FILE:
DRAWN BY:
CHECKED BY:
DESIGNED BY:

SHEET TITLE:

FLOOR PLAN

SHEET NUMBER:

NU-112

SHEET 26 OF 31

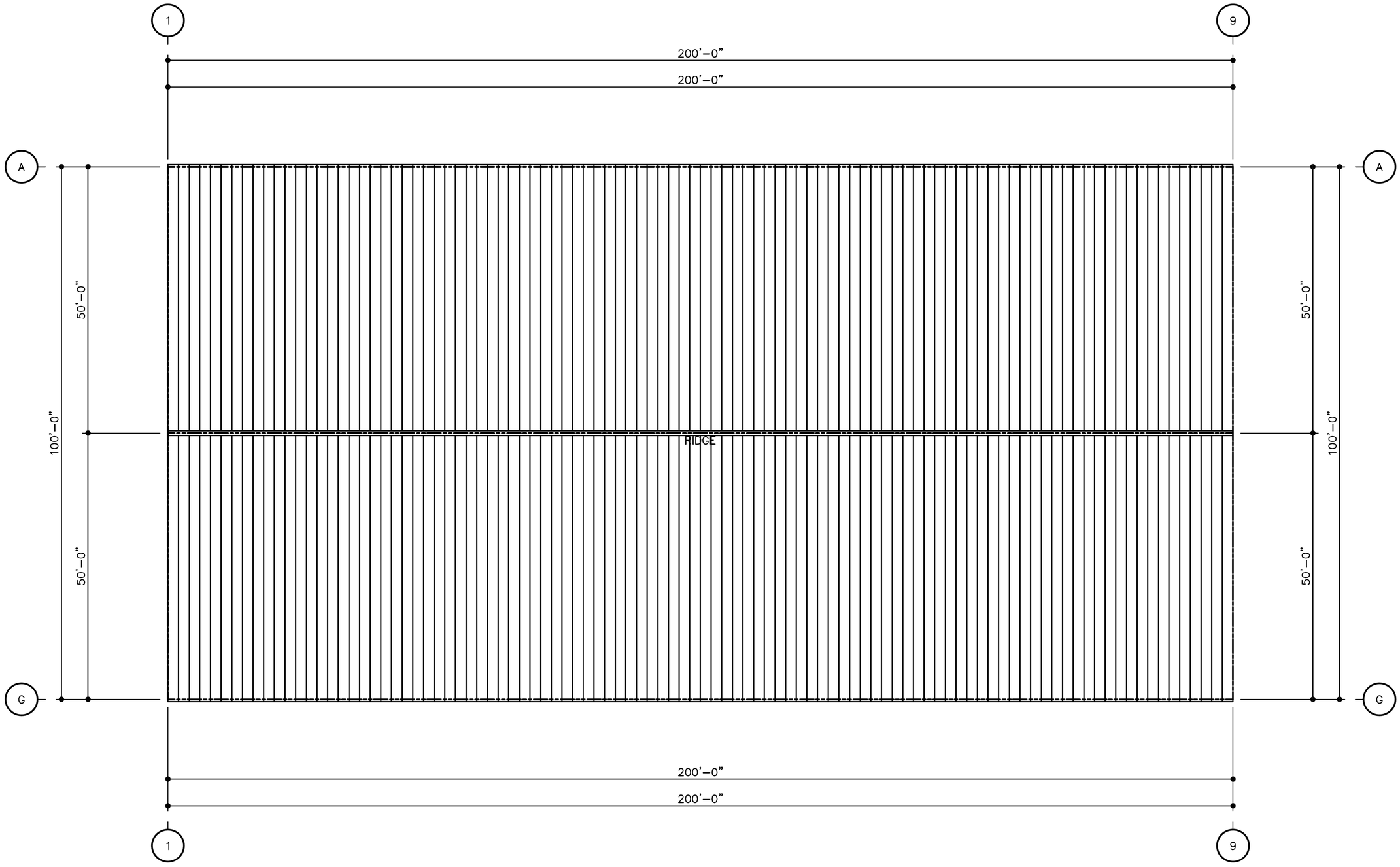

ROOF SHEETING PLAN

Event Pavillion – PANELS: 24 GA. STANDINGSEAM360 – EVERGREEN

STATE OF MISSOURI
MICHAEL L. PARSON ,
GOVERNOR

OFFICE OF ADMINISTRATION
DIVISION OF FACILITIES
MANAGEMENT
DESIGN AND CONSTRUCTION

NEW PAVILION

MISSOURI STATE
FAIRGROUNDS,
2503 W. 16TH STREET
SEDALIA, MO 65301

PROJECT # F2001-01
SITE # 1501

FACILITY # 3511501143

REVISION:
DATE:
REVISION:
DATE:
REVISION:
DATE:
ISSUE DATE: 11/15/2019

CAD DWG FILE:
DRAWN BY:
CHECKED BY:
DESIGNED BY:

SHEET TITLE:

ROOF PLAN

SHEET NUMBER:

NU-113

SHEET 27 OF 31

KEY PLAN

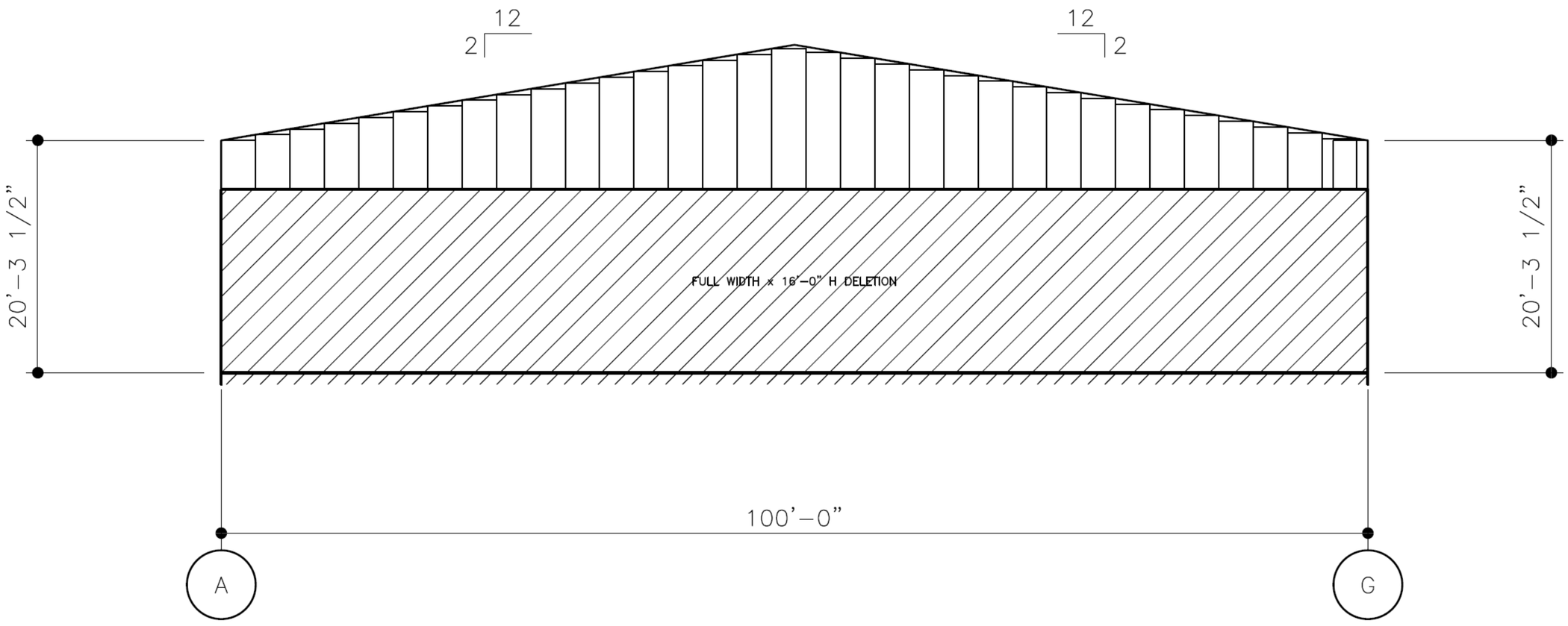

WALL SHEETING ELEVATION AT LINE 1

PANELS: 26 GA. Longspan III – N/A

STATE OF MISSOURI
MICHAEL L. PARSON ,
GOVERNOR

OFFICE OF ADMINISTRATION
DIVISION OF FACILITIES
MANAGEMENT
DESIGN AND CONSTRUCTION

NEW PAVILION

MISSOURI STATE
FAIRGROUNDS,
2503 W. 16TH STREET
SEDALIA, MO 65301

PROJECT # F2001-01
SITE # 1501

FACILITY # 3511501143

REVISION:
DATE:
REVISION:
DATE:
REVISION:
DATE:
ISSUE DATE: 11/15/2019

CAD DWG FILE:
DRAWN BY:
CHECKED BY:
DESIGNED BY:

SHEET TITLE:

SHEETING PLAN

SHEET NUMBER:

NU-114

SHEET 28 OF 31

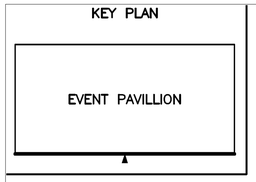

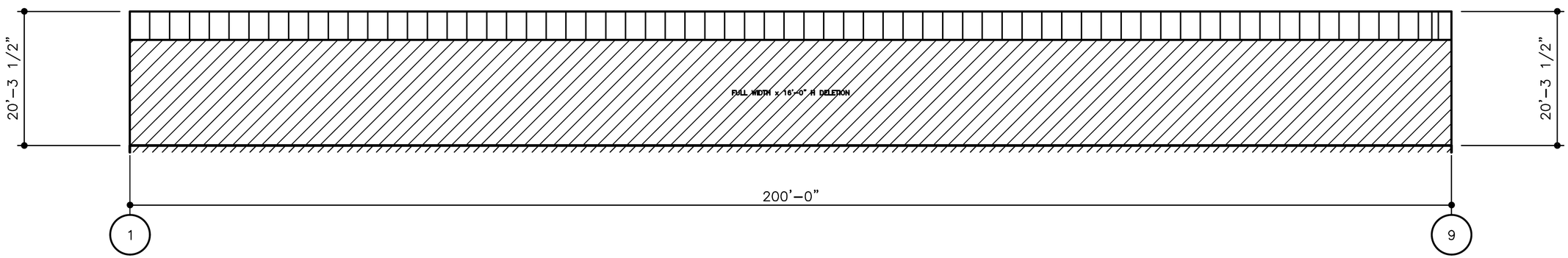

WALL SHEETING ELEVATION AT LINE G

PANELS: 26 GA. Longspan III – N/A

STATE OF MISSOURI
MICHAEL L. PARSON ,
GOVERNOR

OFFICE OF ADMINISTRATION
DIVISION OF FACILITIES
MANAGEMENT
DESIGN AND CONSTRUCTION

NEW PAVILION

MISSOURI STATE
FAIRGROUNDS,
2503 W. 16TH STREET
SEDALIA, MO 65301

PROJECT # F2001-01
SITE # 1501

FACILITY # 3511501143

REVISION:
DATE:
REVISION:
DATE:
REVISION:
DATE:
ISSUE DATE: 11/15/2019

CAD DWG FILE:
DRAWN BY:
CHECKED BY:
DESIGNED BY:

SHEET TITLE:

SHEETING PLAN

SHEET NUMBER:

NU-115

SHEET 29 OF 31

KEY PLAN

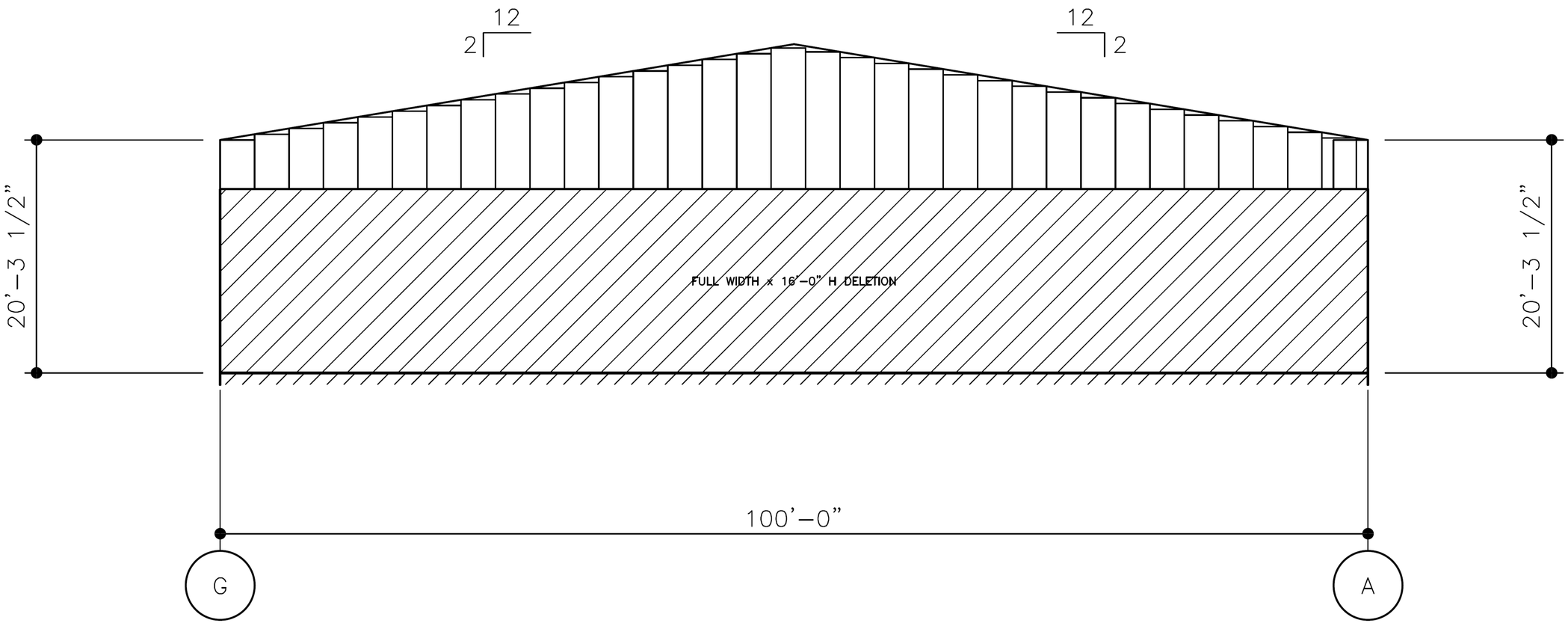

WALL SHEETING ELEVATION AT LINE 9

PANELS: 26 GA. Longspan III – N/A

STATE OF MISSOURI
MICHAEL L. PARSON,
GOVERNOR

OFFICE OF ADMINISTRATION
DIVISION OF FACILITIES
MANAGEMENT
DESIGN AND CONSTRUCTION

NEW PAVILION

MISSOURI STATE
FAIRGROUNDS,
2503 W. 16TH STREET
SEDALIA, MO 65301

PROJECT # F2001-01
SITE # 1501
FACILITY # 3511501143

REVISION:
DATE:
REVISION:
DATE:
REVISION:
DATE:
ISSUE DATE: 11/15/2019

CAD DWG FILE:
DRAWN BY:
CHECKED BY:
DESIGNED BY:

SHEET TITLE:

SHEETING PLAN

SHEET NUMBER:

NU-116

SHEET 30 OF 31

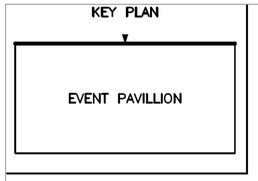

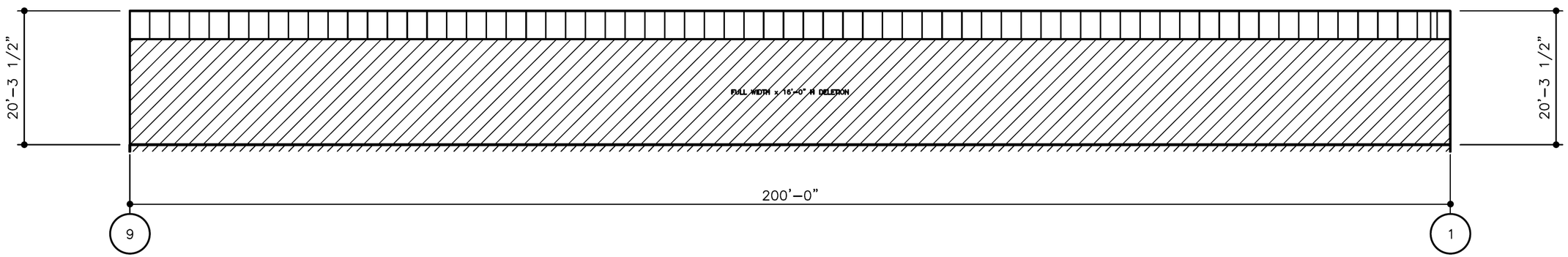

WALL SHEETING ELEVATION AT LINE A

PANELS: 26 GA. Longspan III – N/A

STATE OF MISSOURI
MICHAEL L. PARSON ,
GOVERNOR

OFFICE OF ADMINISTRATION
DIVISION OF FACILITIES
MANAGEMENT
DESIGN AND CONSTRUCTION

NEW PAVILION

MISSOURI STATE
FAIRGROUNDS,
2503 W. 16TH STREET
SEDALIA, MO 65301

PROJECT # F2001-01
SITE # 1501

FACILITY # 3511501143

REVISION:
DATE:
REVISION:
DATE:
REVISION:
DATE:
ISSUE DATE: 11/15/2019

CAD DWG FILE:
DRAWN BY:
CHECKED BY:
DESIGNED BY:

SHEET TITLE:

SHEETING PLAN

SHEET NUMBER:

NU-117

SHEET 31 OF 31