W.E. SEARS YOUTH CENTER
WATER & WASTEWATER
SYSTEMS UPGRADE
POPLAR BLUFF, MISSOURI

ESTABLISHED 1968

AN EMPLOYEE OWNED COMPANY

SMITH & CO.
ENGINEERS

901 VINE STREET; P.O. BOX 72 POPLAR BLUFF, MISSOURI 63902
(573) 785-9621 FAX: (573) 785-2651 WWW.SHSMITHCO.COM

CIVIL ENGINEERING • SURVEYING
ENVIRONMENTAL & GEOTECHNICAL SERVICES
MATERIAL TESTING

CELEBRATING 50 years 1968-2018

OWNER: STATE OF MISSOURI
MICHAEL L. PARSON,
GOVERNOR

DEPARTMENT OF SOCIAL SERVICES
-DIVISION OF YOUTH SERVICES

PROJECT MANAGEMENT: OFFICE OF ADMINISTRATION
DIVISION OF FACILITIES MANAGEMENT,
DESIGN AND CONSTRUCTION

SHEET	DESCRIPTION	REVISIONS 0	1	2	3	4	5	6
G-001	COVER SHEET	●						
G-002	LEGEND / NOTES	●						
C-101	WATER SYSTEM EXISTING CONDITIONS	●						
C-102	WATER SYSTEM DETAILS	●						
C-103	SANITARY SEWER EXISTING CONDITIONS	●						
C-104	SANITARY SEWER PROPOSED SITE PLAN	●						
C-105	SANITARY SEWER HYDRAULIC PROFILE	●						
C-106	SANITARY SEWER LAGOON #1 LAYOUT	●						
C-107	GROUND APPLICATION PLAN & PROFILE	●						
C-108	GROUND APPLICATION PLAN & PROFILE	●						
C-109	GROUND APPLICATION PLAN & PROFILE	●						
C-110	SANITARY SEWER SYSTEM DETAILS	●						
C-111	CONSTRUCTION DETAILS	●						
E-101	WATER SYSTEM ELECTRICAL DETAILS	●						
E-102	ELECTRICAL DETAILS	●						

DESIGNER: DOMINIC THOMPSON, P.E.
PH#: (573)785-9621 (573)429-1894
EMAIL: domt@shsmithco.com

PROJECT NUMBER: H1610-01

SHS PROJECT NUMBER: P160201

SITE NUMBER: 5701
FACILITY NUMBER: 5701-04 (WATER SYSTEM)
5701-05 (WASTEWATER SYSTEM)

MISSOURI STATE CERTIFICATE OF AUTHORITY
#E-616-D

STATE OF MISSOURI
DOMINIC D THOMPSON
NUMBER PE-2008019610
6/21/19
PROFESSIONAL ENGINEER

DOMINIC D THOMPSON
MO# PE-2008019610

SHEET NUMBER:
G-001

LEGEND

EXISTING

UNDERGROUND UTILITY LINES:
- WATER — W
- SANITARY SEWER — S
- FORCE MAIN — FM
- STORM SEWER — STS
- TELEPHONE — T
- GAS — G
- ELECTRIC — E
- CABLE — C
- FUEL LINE — F
- FIBER OPTIC — FO

OVERHEAD UTILITY LINES:
- TELEPHONE — O-T
- ELECTRIC — O-E
- CABLE — O-C

POWER POLE — PP
POWER POLE W/TRANSFORMERS NO. — PP-1
CABLE POLE — CP
TELEPHONE POLE — TP
LIGHT POLE — LP
GUY WIRE ANCHOR — PP
ELECTRICAL RISER — ELEC. RISER
TELEPHONE PEDESTAL — PHPD
MANHOLE — EXIST. MH
CLEAN OUT — CO
FIRE HYDRANT
FLUSH HYDRANT — (FLUSH)
VALVE WATER/GAS — WV GV
METER WATER/GAS/ELECTRIC ETC. — WATER/GAS/ELECTRIC METER
DROP INLET FOR STORM WATER — DROP INLET
DOWN SPOUT — DS
SIGN — SIGN
RIGHT-OF-WAY MARKER — R/W
TREE
TREE LINE
CONTROL POINT — CP#1
CONTOURS
- INTERMEDIATE — 100
- INDEX — 100

FENCE
- CHAIN LINK
- WOOD
- BARBED WIRE — X

RIGHT-OF-WAY LINE
PROPERTY LINE
GUARD RAIL
PIPE/CULVERT
DITCH FLOW LINE DIRECTION
BUILDING

PROPOSED

WATER
- 2" WATER LINE — 2W
- 4" WATER LINE — 4W
- 6" WATER LINE — 6W
- 8" WATER LINE — 8W
- 10" WATER LINE — 10W
- 12" WATER LINE — 12W

FIRE HYDRANT
FLUSH HYDRANT — (FLUSH)
VALVE WATER — WV
WATER SERVICE (DRILLED WELL) — W

SEWER
- SANITARY SEWER — S
- FORCE MAIN — FM
- MANHOLE — MH#1
- SEWER SERVICE — S
- CLEAN OUT — CO

GAS VALVE — GV
POWER POLE — PP
POWER POLE W/TRANSFORMERS NO. — PP-1
CABLE POLE — CP
TELEPHONE POLE — TP
LIGHT POLE — LP
SIGN — SIGN
TREE
CONTOURS — 100
PIPE/CULVERT
DROP INLET — DROP INLET #1
TEMP.CONSTRUCTION EASEMENT
GUARD RAIL
SILT FENCE
RIGHT-OF-WAY
EASEMENT (PERMANENT)
EASEMENT (TEMPORARY)
BUILDING
TYPE 1 ROCK BLANKET

NOTE:
ALL ITEMS IN THE GENERAL LEGEND MAY OR MAY NOT BE USED IN THIS PLAN SET.

INDICATES ORIENTATION OF THE SECTION

A / 5 — CROSS-SECTION LETTER OR NUMBER; SHEET NUMBER ON WHICH SECTION APPEARS

B / 5 — DETAIL LETTER OR NUMBER; SHEET NUMBER ON WHICH DETAIL APPEARS

CIRCULAR CURVE PARAMETERS

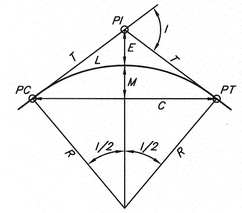

PI = POINT OF INTERSECTION
PC = POINT OF CURVATURE
PT = POINT OF TANGENCY
I = DEFLECTION ANGLE
Da = DEGREE OF CURVE (ARC DEFINITION)
Dc = DEGREE OF CURVE (CHORD DEFINITION)
T = TANGENT LENGTH
R = RADIUS
L = LENGTH OF CURVE
C = CHORD LENGTH
E = EXTERNAL
M = MIDDLE ORDINATE
HP = HIGH POINT
LP = LOW POINT

EXISTING UTILITIES NOTE:

1. THE LOCATIONS OF EXISTING UNDERGROUND UTILITIES SHOWN ARE BASED ON VISIBLE ABOVE-GROUND OBJECTS AND MARKINGS, PREVIOUS RECORD DRAWINGS AND SURVEYS PROVIDED TO SMITH&CO. BY OTHERS, AND PAINT OR OTHER MARKINGS MADE BY UTILITY COMPANIES AND/OR UTILITY LOCATOR SERVICES PRIOR TO THE FIELD SURVEY. NO EXCAVATIONS WERE MADE DURING THE PROGRESS OF THIS SURVEY TO LOCATE BURIED OBJECTS. LOCATIONS OF UNDERGROUND UTILITIES/STRUCTURES/CONDUITS MAY VARY FROM THE LOCATIONS SHOWN HEREUPON. ADDITIONAL BURIED UTILITIES THAT DO NOT HAVE SURFACE MARKERS MAY BE ENCOUNTERED DURING EXCAVATION.

2. SMITH&CO. IS NOT A UTILITY LOCATOR SERVICE. SMITH&CO. IS NOT RESPONSIBLE OR LIABLE FOR DAMAGES RESULTING FROM UNMARKED OR INACCURATELY MARKED UNDERGROUND UTILITIES OR STRUCTURES.

3. THE MISSOURI ONE CALL SYSTEM (DIG-RITE) MUST BE CALLED AT LEAST TWO WORKING DAYS AND NOT MORE THAN TEN WORKING DAYS BEFORE ANY EXCAVATIONS OR INTRUSIVE SUBSURFACE ACTIVITIES ARE BEGUN. ALTHOUGH SMITH&CO. MAY HAVE CALLED DIG-RITE PRIOR TO ANY FIELD SURVEYING, IT IS THE RESPONSIBILITY OF THE PERSON(S) PERFORMING THE EXCAVATION TO CALL MISSOURI ONE-CALL PRIOR TO DIGGING.

MISSOURI ONE-CALL SYSTEM: CALL 1-800-344-7483 BEFORE YOU DIG.

MISSOURI ONE CALL SYSTEM INC. 1-800-344-7483 STOP-CALL BEFORE YOU DIG!

UTILITY CONTACTS:

OZARK BORDER ELECTRIC COOPERATIVE
JOHN WALKER
3281 WESTWOOD BLVD.
POPLAR BLUFF, MO 63902
(573)785-4631

GENERAL NOTES:

1. CONTRACTOR SHALL COORDINATE ALL WORK WITH TONY HUGHES, SITE SUPERVISOR, 40 HOURS PRIOR TO COMMENCING WORK ON AFFECTED PROPERTY.
2. CONTRACTOR TO REPAIR OR REPLACE ALL FENCES DISTURBED OR DAMAGED ON CONSTRUCTION ACTIVITIES.
3. ALL SEWER PIPING JOINTS AND FITTINGS SHALL BE RESTRAINED.

ESTIMATED EARTHWORK QUANTITIES:

CUT: 9656.10 CU. YD.
FILL: 17798.28 CU. YD.

CONTROL POINTS

Number	Northing	Easting	Elevation
107	373711.182	816719.927	577.05
501	374331.99	817480.719	589.99
503	374231.444	816943.528	600.15
504	374254.245	817259.265	592.77
549	373440.036	816903.052	554.57
575	373429.696	817106.314	538.84
620	373274.245	816893.232	549.99
641	373102.017	816844.879	538.44
656	372901.286	816770.514	526.21
695	372645.513	816775.02	508.45
701	372721.311	816971.269	497.83
702	374235.773	817169.108	596.54
758	372468.361	816571.75	492.93
773	373022.949	817080.343	508.66
853	372839.151	816216.421	525.56
910	372462.651	816353.793	495.15
944	372311.334	816037.943	477.99
983	372224.736	815920.107	472.04
984	372451.77	815891.968	478.77
1034	372738.121	815995.145	492.33

SEE SHEET C-101 & C-103 FOR GRAPHIC LOCATION.

STATE OF MISSOURI
MICHAEL L. PARSON,
GOVERNOR

STATE OF MISSOURI — DOMINIC D THOMPSON — NUMBER PE-2008019610 — PROFESSIONAL ENGINEER — 6/21/19

DOMINIC D THOMPSON
MO# PE-2008019610

ESTABLISHED 1968 — AN EMPLOYEE OWNED COMPANY
SMITH&CO. ENGINEERS
901 VINE STREET; P.O. BOX 72
POPLAR BLUFF, MISSOURI 63902
(573) 785-9621 FAX: (573) 785-2651 WWW.SHSMITHCO.COM
CIVIL ENGINEERING • SURVEYING •
ENVIRONMENTAL & GEOTECHNICAL SERVICES • MATERIAL TESTING

OFFICE OF ADMINISTRATION
DIVISION OF FACILITIES MANAGEMENT,
DESIGN AND CONSTRUCTION

DEPARTMENT OF SOCIAL SERVICES
DIVISION OF YOUTH SERVICES

PROJECT TITLE
W.E. SEARS YOUTH CENTER WATER AND WASTEWATER SYSTEMS UPGRADE

W.E. SEARS YOUTH CENTER
POPLAR BLUFF, MO

PROJECT # H-1610-01
SITE # 5701
FACILITY # 5701-04
5701-05

REVISION:
DATE:
REVISION:
DATE:
REVISION:
DATE:
ISSUE DATE: 6/21/2019

CAD DWG FILE: P160201
DRAWN BY: DKH
CHECKED BY: DDT
DESIGNED BY: DDT

SHEET TITLE:
LEGEND AND NOTES

SHEET NUMBER:
G-002

2 OF 15 SHEETS
JUNE, 2019

P:\P160201 WE Sears Youth Center WW Upgrade Study\Eng\Drawings\P160201.dwg
6/27/2019 1:30 PM

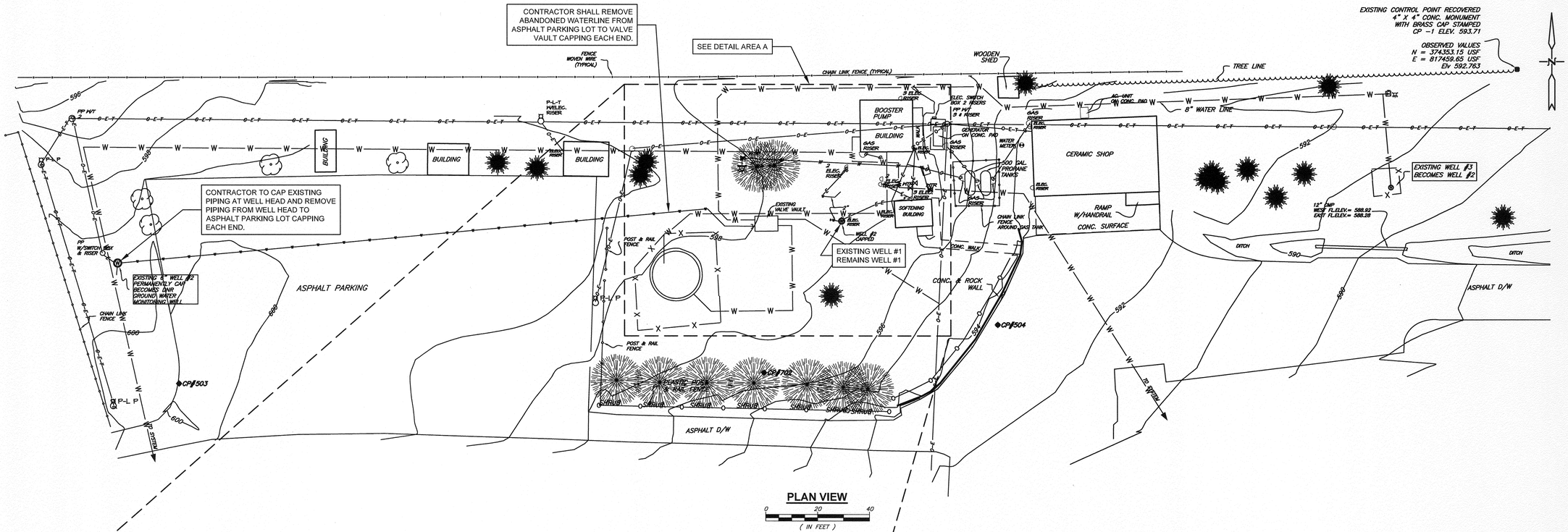

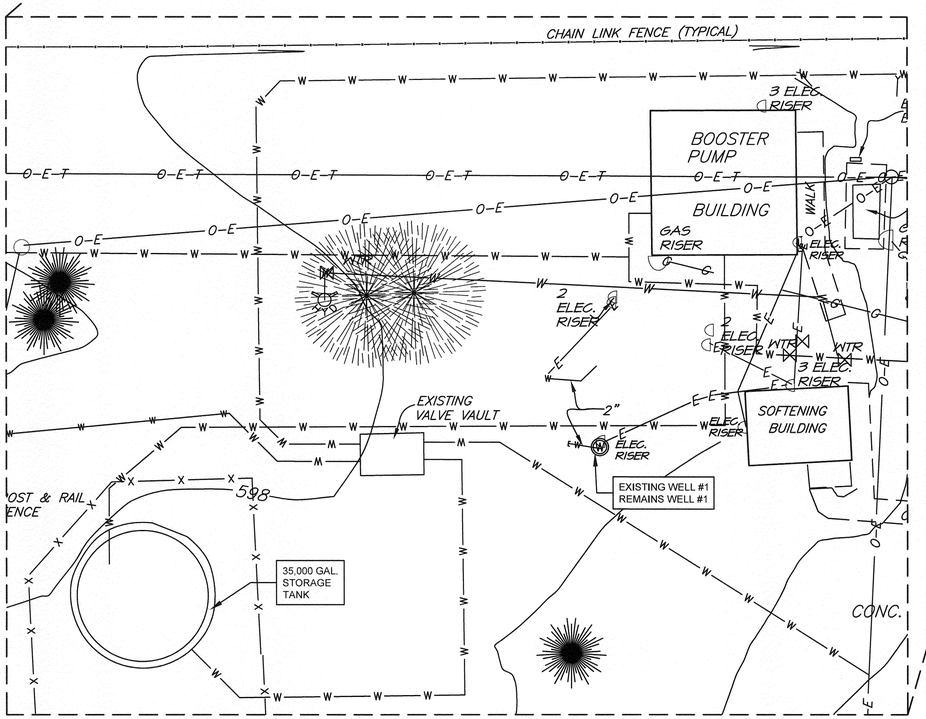

NOTE:

1. AS PART OF THE SCOPE OF WORK, EAST WELL #3'S COMPONENTS SHALL REMAIN AS WELL #2. THE CENTER WELL #1'S COMPONENTS WILL CONTINUE TO BE KNOWN AS WELL #1. THE CONTRACTOR SHALL REMOVE AS MUCH AS POSSIBLE DURING THE PROPOSED VALVE VAULT REVISIONS INCLUDING THE CAPPED/CLOSED WEST WELL #2'S ABANDONED EQUIPMENT, PIPING, WIRING, CONTROLS, LABELING, TO AVOID CONFUSION OF FUTURE MAINTENANCE/SERVICE PERSONNEL CAUSED BY LEAVING OLD WELL #2'S ABANDONED COMPONENTS IN PLACE (SEE SHEET C-102 – DETAILED VIEW OF PROPOSED VALVE VAULT REVISIONS).
2. THE CONTRACTOR SHALL RECONFIGURE/RELABEL THE EAST WELL #3 – RENAMED TO WELL #2 EQUIPMENT, PIPING, WIRING, CONTROLS, LABELING. THE CONTRACTOR SHALL VERIFY/CORRECT THE CENTER WELL #1'S EQUIPMENT, PIPING, WIRING, CONTROLS, LABELING, AS NEEDED PER THE PROJECT PLANS AND SPECIFICATIONS.
3. CONTRACTOR SHALL ENSURE THAT THERE IS NO INTERRUPTIONS OF WATER SERVICE DURING CONSTRUCTION.
4. THE EXISTING WELL #2 IS BEING ISOLATED FROM THE W.E.S.Y.C. WATER SYSTEM AND BEING GIVEN TO THE MISSOURI DEPARTMENT OF NATURAL RESOURCES GROUNDWATER GEOLOGY SECTION AS A GROUND WATER MONITORING STATION.

EXISTING UTILITIES NOTE:

1. THE LOCATIONS OF EXISTING UNDERGROUND UTILITIES SHOWN ARE BASED ON VISIBLE ABOVE-GROUND OBJECTS AND MARKINGS, PREVIOUS RECORD DRAWINGS AND SURVEYS PROVIDED TO SMITH&CO. BY OTHERS, AND PAINT OR OTHER MARKINGS MADE BY UTILITY COMPANIES AND/OR UTILITY LOCATOR SERVICES PRIOR TO THE FIELD SURVEY. NO EXCAVATIONS WERE MADE DURING THE PROGRESS OF THIS SURVEY TO LOCATE BURIED OBJECTS. LOCATIONS OF UNDERGROUND UTILITIES/STRUCTURES/CONDUITS MAY VARY FROM THE LOCATIONS SHOWN HEREUPON. ADDITIONAL BURIED UTILITIES THAT DO NOT HAVE SURFACE MARKERS MAY BE ENCOUNTERED DURING EXCAVATION.

2. SMITH&CO. IS NOT A UTILITY LOCATOR SERVICE. SMITH&CO. IS NOT RESPONSIBLE OR LIABLE FOR DAMAGES RESULTING FROM UNMARKED OR INACCURATELY MARKED UNDERGROUND UTILITIES OR STRUCTURES.

3. THE MISSOURI ONE CALL SYSTEM (DIG-RITE) MUST BE CALLED AT LEAST TWO WORKING DAYS AND NOT MORE THAN TEN WORKING DAYS BEFORE ANY EXCAVATIONS OR INTRUSIVE SUBSURFACE ACTIVITIES ARE BEGUN. ALTHOUGH SMITH&CO. MAY HAVE CALLED DIG-RITE PRIOR TO ANY FIELD SURVEYING, IT IS THE RESPONSIBILITY OF THE PERSON(S) PERFORMING THE EXCAVATION TO CALL MISSOURI ONE-CALL PRIOR TO DIGGING.

MISSOURI ONE-CALL SYSTEM: CALL 1-800-344-7483 BEFORE YOU DIG.

STATE OF MISSOURI
MICHAEL L. PARSON,
GOVERNOR

STATE OF MISSOURI DOMINIC D THOMPSON NUMBER PE-2008019610 PROFESSIONAL ENGINEER 6/21/2019

DOMINIC D THOMPSON
MO# PE-2008019610

ESTABLISHED 1968
AN EMPLOYEE OWNED COMPANY
SMITH&CO. ENGINEERS
901 VINE STREET; P.O. BOX 72
POPLAR BLUFF, MISSOURI 63902
(573) 785-9621 FAX: (573) 785-2851 WWW.SHSMITHCO.COM
CIVIL ENGINEERING • SURVEYING •
ENVIRONMENTAL & GEOTECHNICAL SERVICES • MATERIAL TESTING

OFFICE OF ADMINISTRATION
DIVISION OF FACILITIES MANAGEMENT,
DESIGN AND CONSTRUCTION

DEPARTMENT OF SOCIAL SERVICES
DIVISION OF YOUTH SERVICES

PROJECT TITLE
W.E. SEARS YOUTH CENTER WATER AND WASTEWATER SYSTEMS UPGRADE

W.E. SEARS YOUTH CENTER
POPLAR BLUFF, MO

PROJECT # H 1610-01
SITE # 5701
FACILITY # 5701-04
5701-05

REVISION:
DATE:
REVISION:
DATE:
REVISION:
DATE:
ISSUE DATE: 6/21/2019

CAD DWG FILE: P160201
DRAWN BY: DKH
CHECKED BY: DDT
DESIGNED BY: DDT

SHEET TITLE:
WATER SYSTEM EXSTING CONDITIONS

SHEET NUMBER:
C-101

3 OF 15 SHEETS
JUNE, 2019

P:\P160201 WE Sears Youth Center WW Upgrade Study\Eng\Drawings\P160201.dwg
6/21/2019 1:30 PM

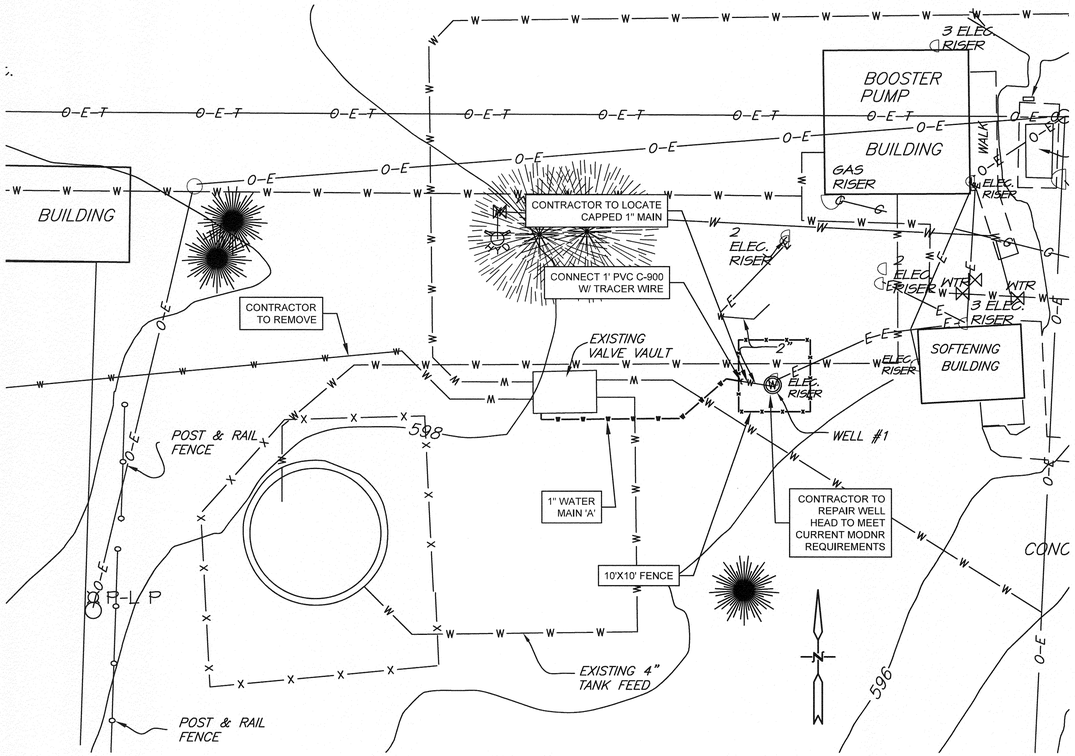

PROPOSED PLAN VIEW

0 20 40 (IN FEET)

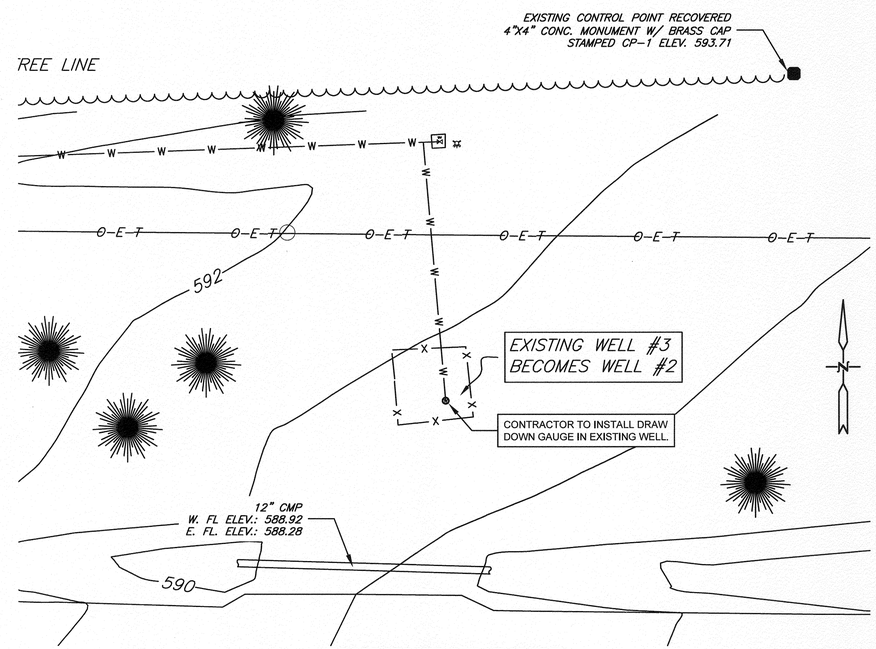

PROPOSED WELL #3 UPGRADE

0 10 20 (IN FEET)

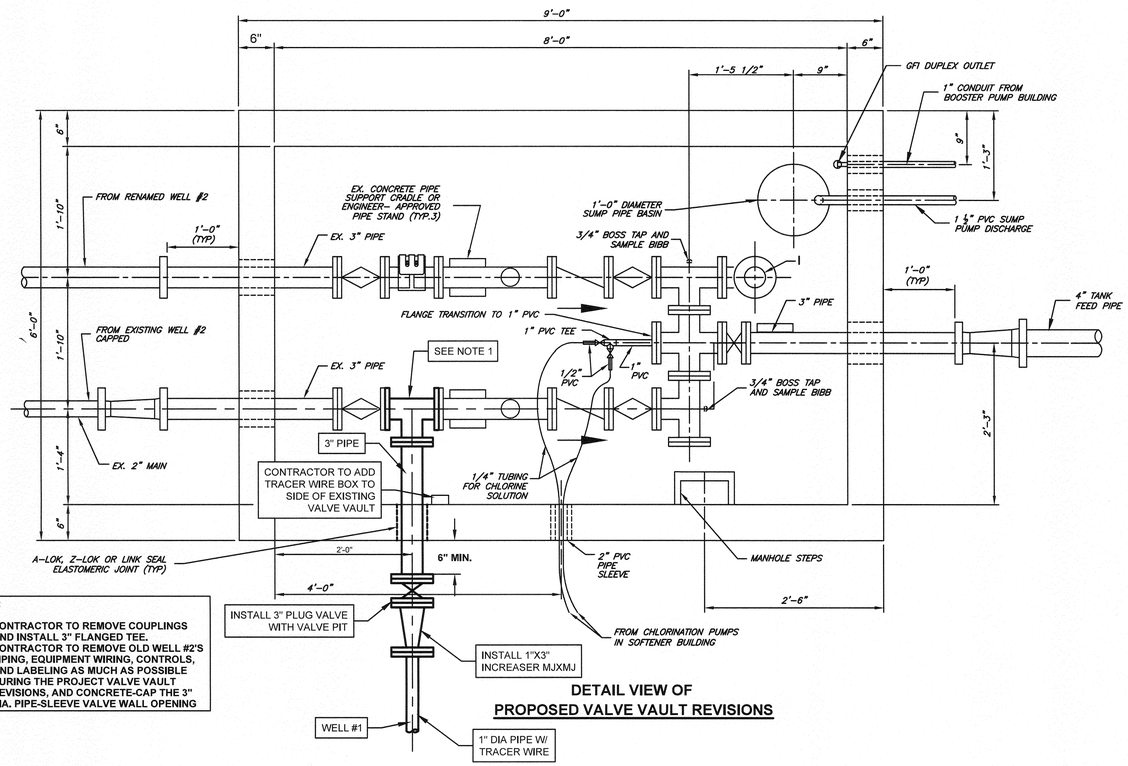

NOTE:

1. CONTRACTOR TO REMOVE COUPLINGS AND INSTALL 3" FLANGED TEE.
2. CONTRACTOR TO REMOVE OLD WELL #2'S PIPING, EQUIPMENT WIRING, CONTROLS, AND LABELING AS MUCH AS POSSIBLE DURING THE PROJECT VALVE VAULT REVISIONS, AND CONCRETE-CAP THE 3" DIA. PIPE-SLEEVE VALVE WALL OPENING

DETAIL VIEW OF PROPOSED VALVE VAULT REVISIONS

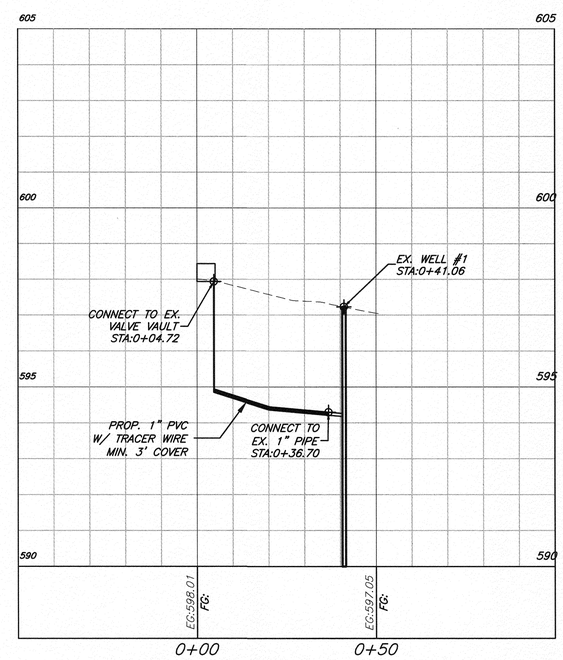

PROPOSED WELL #1 UPGRADES - MAIN PROFILE A

0 20 40 (HORZ. IN FEET) 0 2 4 (VERT. IN FEET)

P:\P160201 WE Sears Youth Center WW Upgrade Study\Eng\Drawings\P160201.dwg

6/27/2019 1:30 PM

STATE OF MISSOURI
MICHAEL L. PARSON, GOVERNOR

STATE OF MISSOURI DOMINIC D THOMPSON NUMBER PE-2008019610 PROFESSIONAL ENGINEER 6/27/19

DOMINIC D THOMPSON
MO# PE-2008019610

ESTABLISHED 1988 AN EMPLOYEE OWNED COMPANY
SMITH&CO. ENGINEERS
901 VINE STREET; P.O. BOX 72
POPLAR BLUFF, MISSOURI 63902
(573) 785-9621 FAX: (573) 785-2651 WWW.SHSMITHCO.COM
CIVIL ENGINEERING • SURVEYING •
ENVIRONMENTAL & GEOTECHNICAL SERVICES • MATERIAL TESTING

OFFICE OF ADMINISTRATION
DIVISION OF FACILITIES MANAGEMENT,
DESIGN AND CONSTRUCTION

DEPARTMENT OF SOCIAL SERVICES
DIVISION OF YOUTH SERVICES

PROJECT TITLE
W.E. SEARS YOUTH CENTER WATER AND WASTEWATER SYSTEMS UPGRADE

W.E. SEARS YOUTH CENTER
POPLAR BLUFF, MO

PROJECT # H1610-01
SITE # 5701
FACILITY # 5701-04
5701-05

REVISION:
DATE:
REVISION:
DATE:
REVISION:
DATE:
ISSUE DATE: 6/21/2019

CAD DWG FILE: P160201
DRAWN BY: DKH
CHECKED BY: DDT
DESIGNED BY: DDT

SHEET TITLE:
WATER SYSTEM CONSTRUCTION DETAILS

SHEET NUMBER:
C-102

4 OF 15 SHEETS
JUNE, 2019

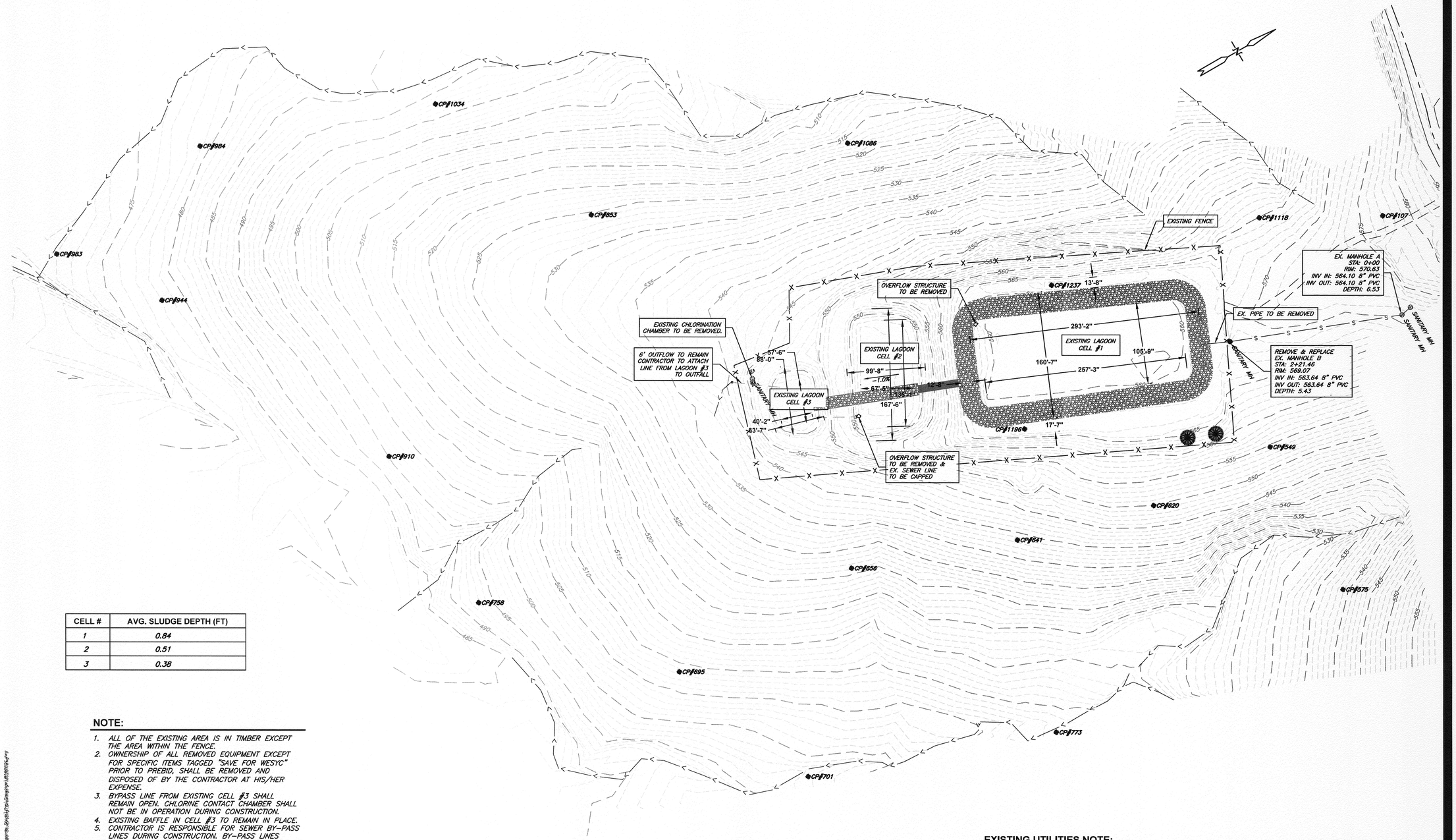

CELL #	AVG. SLUDGE DEPTH (FT)
1	0.84
2	0.51
3	0.38

NOTE:

1. ALL OF THE EXISTING AREA IS IN TIMBER EXCEPT THE AREA WITHIN THE FENCE.
2. OWNERSHIP OF ALL REMOVED EQUIPMENT EXCEPT FOR SPECIFIC ITEMS TAGGED "SAVE FOR WESYC" PRIOR TO PREBID, SHALL BE REMOVED AND DISPOSED OF BY THE CONTRACTOR AT HIS/HER EXPENSE.
3. BYPASS LINE FROM EXISTING CELL #3 SHALL REMAIN OPEN. CHLORINE CONTACT CHAMBER SHALL NOT BE IN OPERATION DURING CONSTRUCTION.
4. EXISTING BAFFLE IN CELL #3 TO REMAIN IN PLACE.
5. CONTRACTOR IS RESPONSIBLE FOR SEWER BY-PASS LINES DURING CONSTRUCTION. BY-PASS LINES SHALL BE INSTALLED ALONG THE WESTERLY SIDE OF CELL NO. 1 & 2 AND SHALL BE SUFFICIENT DISTANCE AS TO NOT INTERFERE WITH CONSTRUCTION.
6. SEWAGE TO BE GRAVITY FED TO CELL #3 DURING CONSTRUCTION OF PROPOSED CELL #1. TEMPORARY PIPING TO BE PRESSURE TESTED TO ENSURE NO LEAKS. CONTRACTOR TO FOLLOW DNR STANDARDS FOR TEMPORARY PIPING. DEPTH OF PROPOSED MIN. 6" PVC BYPASS LINES SHALL BE A MINIMUM OF 18" DEEP WITH CLEAN-OUTS EVERY 150'.
7. CONTRACTOR IS RESPONSIBLE FOR SLUDGE REMOVAL IN EXISTING CELLS 1,2&3. CONTRACTOR SHALL SUBMIT SLUDGE REMOVAL PLAN TO THE ENGINEER FOR REVIEW AND APPROVAL AND SHALL OBTAIN ALL NECESSARY PERMITTING FROM THE MO. DEPT. OF NATURAL RESOURCES.

EXISTING SITE PLAN

0 60 120
(IN FEET)

EXISTING UTILITIES NOTE:

1. THE LOCATIONS OF EXISTING UNDERGROUND UTILITIES SHOWN ARE BASED ON VISIBLE ABOVE-GROUND OBJECTS AND MARKINGS, PREVIOUS RECORD DRAWINGS AND SURVEYS PROVIDED TO SMITH&CO. BY OTHERS, AND PAINT OR OTHER MARKINGS MADE BY UTILITY COMPANIES AND/OR UTILITY LOCATOR SERVICES PRIOR TO THE FIELD SURVEY. NO EXCAVATIONS WERE MADE DURING THE PROGRESS OF THIS SURVEY TO LOCATE BURIED OBJECTS. LOCATIONS OF UNDERGROUND UTILITIES/STRUCTURES/CONDUITS MAY VARY FROM THE LOCATIONS SHOWN HEREUPON. ADDITIONAL BURIED UTILITIES THAT DO NOT HAVE SURFACE MARKERS MAY BE ENCOUNTERED DURING EXCAVATION.

2. SMITH&CO. IS NOT A UTILITY LOCATOR SERVICE. SMITH&CO. IS NOT RESPONSIBLE OR LIABLE FOR DAMAGES RESULTING FROM UNMARKED OR INACCURATELY MARKED UNDERGROUND UTILITIES OR STRUCTURES.

3. THE MISSOURI ONE CALL SYSTEM (DIG-RITE) MUST BE CALLED AT LEAST TWO WORKING DAYS AND NOT MORE THAN TEN WORKING DAYS BEFORE ANY EXCAVATIONS OR INTRUSIVE SUBSURFACE ACTIVITIES ARE BEGUN. ALTHOUGH SMITH&CO. MAY HAVE CALLED DIG-RITE PRIOR TO ANY FIELD SURVEYING, IT IS THE RESPONSIBILITY OF THE PERSON(S) PERFORMING THE EXCAVATION TO CALL MISSOURI ONE-CALL PRIOR TO DIGGING.

MISSOURI ONE-CALL SYSTEM: CALL 1-800-344-7483 BEFORE YOU DIG.

STATE OF MISSOURI
MICHAEL L. PARSON,
GOVERNOR

STATE OF MISSOURI
DOMINIC D THOMPSON
NUMBER PE-2008019610
PROFESSIONAL ENGINEER

DOMINIC D THOMPSON
MO# PE-2008019610

ESTABLISHED 1968
AN EMPLOYEE OWNED COMPANY
SMITH&CO. ENGINEERS
901 VINE STREET; P.O. BOX 72
POPLAR BLUFF, MISSOURI 63902
(573) 785-9621 FAX: (573) 785-2651 WWW.SHSMITHCO.COM
CIVIL ENGINEERING • SURVEYING •
ENVIRONMENTAL & GEOTECHNICAL SERVICES • MATERIAL TESTING

OFFICE OF ADMINISTRATION
DIVISION OF FACILITIES MANAGEMENT,
DESIGN AND CONSTRUCTION

DEPARTMENT OF SOCIAL SERVICES
DIVISION OF YOUTH SERVICES

PROJECT TITLE
W.E. SEARS YOUTH CENTER
WATER AND
WASTEWATER SYSTEMS
UPGRADE

W.E. SEARS YOUTH CENTER
POPLAR BLUFF, MO

PROJECT # H1610-01
SITE # 5701
FACILITY # 5701-04
5701-05

REVISION:
DATE:
REVISION:
DATE:
REVISION:
DATE:
ISSUE DATE: 6/21/2019

CAD DWG FILE: P160201
DRAWN BY: DKH
CHECKED BY: DDT
DESIGNED BY: DDT

SHEET TITLE:
SANITARY SEWER
EXISTING
CONDITIONS

SHEET NUMBER:
C-103

5 OF 15 SHEETS
JUNE, 2019

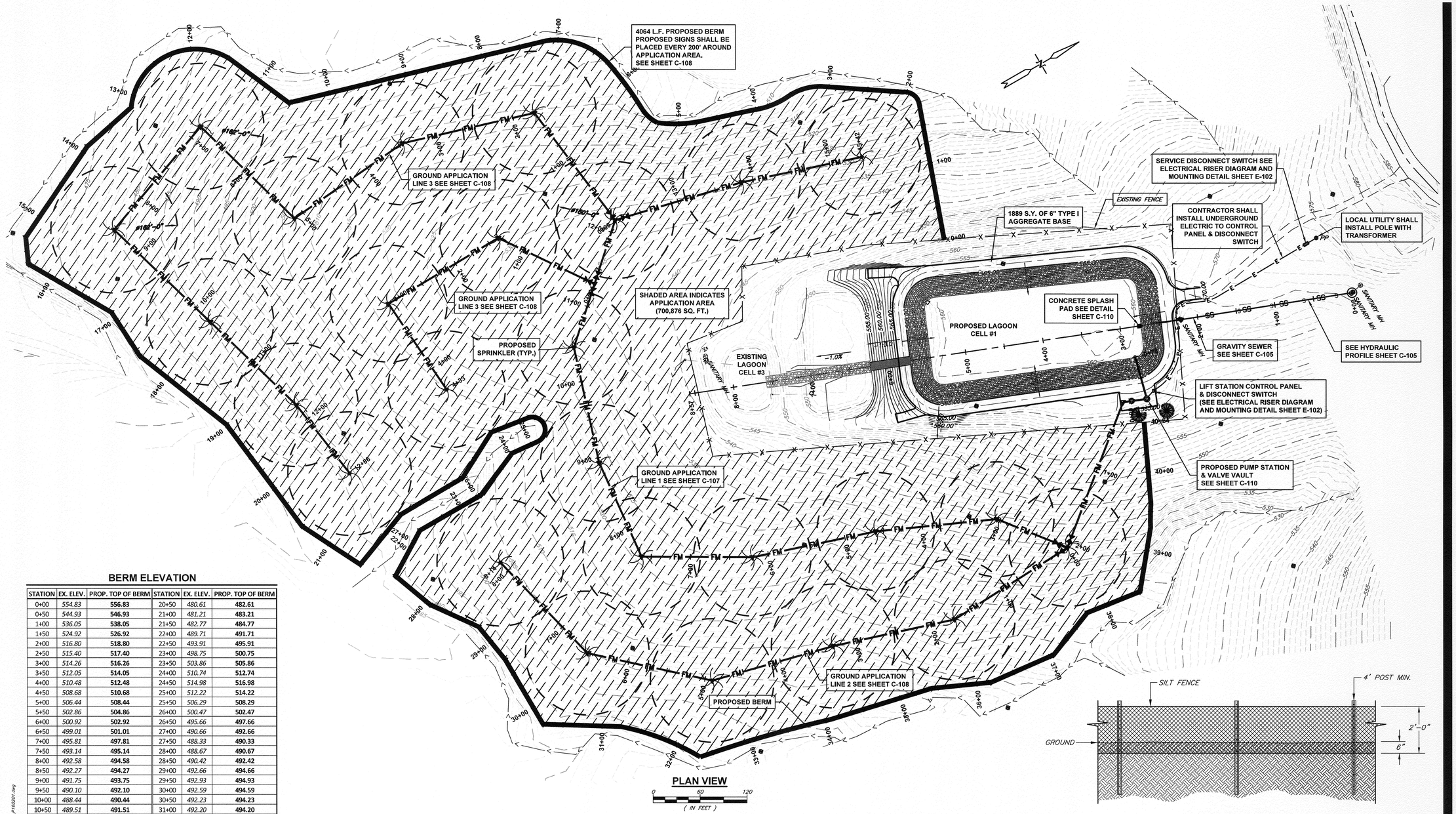

PLAN VIEW

0 60 120
(IN FEET)

BERM ELEVATION

STATION	EX. ELEV.	PROP. TOP OF BERM	STATION	EX. ELEV.	PROP. TOP OF BERM
0+00	554.83	556.83	20+50	480.61	482.61
0+50	544.93	546.93	21+00	481.21	483.21
1+00	536.05	538.05	21+50	482.77	484.77
1+50	524.92	526.92	22+00	489.71	491.71
2+00	516.80	518.80	22+50	493.91	495.91
2+50	515.40	517.40	23+00	498.75	500.75
3+00	514.26	516.26	23+50	503.86	505.86
3+50	512.05	514.05	24+00	510.74	512.74
4+00	510.48	512.48	24+50	514.98	516.98
4+50	508.68	510.68	25+00	512.22	514.22
5+00	506.44	508.44	25+50	506.29	508.29
5+50	502.86	504.86	26+00	500.47	502.47
6+00	500.92	502.92	26+50	495.66	497.66
6+50	499.01	501.01	27+00	490.66	492.66
7+00	495.81	497.81	27+50	488.33	490.33
7+50	493.14	495.14	28+00	488.67	490.67
8+00	492.58	494.58	28+50	490.42	492.42
8+50	492.27	494.27	29+00	492.66	494.66
9+00	491.75	493.75	29+50	492.93	494.93
9+50	490.10	492.10	30+00	492.59	494.59
10+00	488.44	490.44	30+50	492.23	494.23
10+50	489.51	491.51	31+00	492.20	494.20
11+00	485.39	487.39	31+50	494.36	496.36
11+50	481.15	483.15	32+00	495.13	497.13
12+00	479.48	481.48	32+50	496.46	498.46
12+50	477.48	479.48	33+00	498.07	500.07
13+00	477.03	479.03	33+50	499.82	501.82
13+50	475.61	477.61	34+00	501.04	503.04
14+00	474.70	476.70	34+50	503.51	505.51
14+50	473.75	475.75	35+00	504.80	506.80
15+00	472.95	474.95	35+50	507.15	509.15
15+50	472.97	474.97	36+00	509.39	511.39
16+00	473.95	475.95	36+50	511.34	513.34
16+50	475.26	477.26	37+00	514.06	516.06
17+00	476.47	478.47	37+50	515.98	517.98
17+50	475.89	477.89	38+00	517.02	519.02
18+00	476.06	478.06	38+50	518.67	520.67
18+50	476.63	478.63	39+00	529.89	531.89
19+00	477.69	479.69	39+50	540.52	542.52
19+50	478.32	480.32	40+00	549.79	551.79
20+00	479.66	481.66	40+50	558.49	560.49

NOTE:

1. SLUDGE REMOVAL & BYPASS PIPING MUST BE IN PLACE PRIOR TO STARTING EARTHWORK.
2. SEE FORCE MAIN LAYOUT SHEET C-107
3. BARBED WIRE FENCE SHALL BE PLACED ON TOP OF THE PROPOSED BERM.
4. CONTRACTOR SHALL FURNISH AND INSTALL A MAIN DISCONNECT LOCATED NEAR THE TRANSFORMER POLE WITH ENOUGH WIRE AND CONDUIT TO REACH TOP OF POLE. THE SECONDARY WIRE WILL CONNECT DIRECTLY TO THE TRANSFORMER LOW SIDE BUSHINGS AT THE TOP OF THE POLE. LOCAL UTILITY WILL INSTALL CONDUIT AND WIRING ON THE POLE AND MAKE ALL CONNECTIONS TO TRANSFORMER.
5. CONTRACTOR SHALL ENSURE SEEDING & MULCHING IS WELL ESTABLISHED BEFORE PROJECT IS APPROVED.

LEGEND:

- TREE REMOVAL AREA (16.8 ACRES)
- E — E — E — ELECTRICAL
- SPRINKLER AREA
- FM — FM — 6" FORCEMAIN
- PROPOSED SPRINKLER
- PROPOSED 6" GATE VALVE

SILT FENCE DETAIL

N.T.S

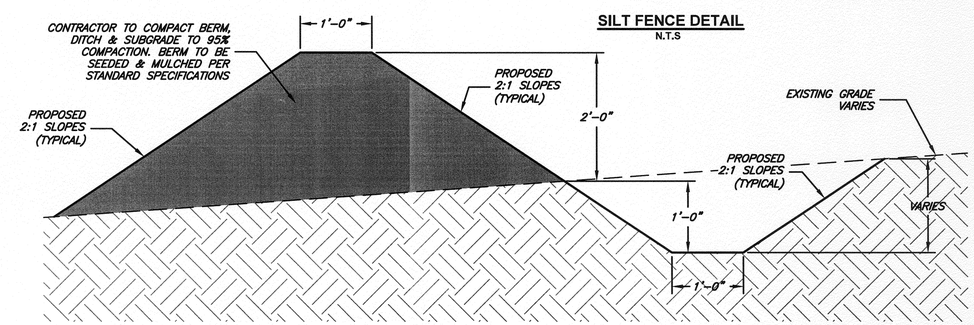

TYPICAL BERM DETAIL

NOT TO SCALE

NOTE:
SILT FENCE SHALL BE ON THE DOWN HILL SIDE OF PROPOSED BERM AND SHALL BE INCIDENTAL TO THE BERM CONSTRUCTION.

STATE OF MISSOURI
MICHAEL L. PARSON,
GOVERNOR

STATE OF MISSOURI · DOMINIC D THOMPSON · NUMBER PE-2008019610 · PROFESSIONAL ENGINEER

DOMINIC D THOMPSON
MO# PE-2008019610

ESTABLISHED 1988 · AN EMPLOYEE OWNED COMPANY
SMITH&CO. ENGINEERS
901 VINE STREET; P.O. BOX 72
POPLAR BLUFF, MISSOURI 63902
(573) 785-9621 FAX: (573) 785-2851 WWW.SHSMITHCO.COM
CIVIL ENGINEERING • SURVEYING •
ENVIRONMENTAL & GEOTECHNICAL SERVICES • MATERIAL TESTING

OFFICE OF ADMINISTRATION
DIVISION OF FACILITIES
MANAGEMENT,
DESIGN AND CONSTRUCTION

DEPARTMENT OF
SOCIAL SERVICES
DIVISION OF
YOUTH SERVICES

PROJECT TITLE
W.E. SEARS YOUTH CENTER
WATER AND
WASTEWATER SYSTEMS
UPGRADE

W.E. SEARS YOUTH CENTER
POPLAR BLUFF, MO

PROJECT # H1610-01
SITE # 5701
FACILITY # 5701-04
5701-05

REVISION:
DATE:
REVISION:
DATE:
REVISION:
DATE:
ISSUE DATE: 6 /21/2019

CAD DWG FILE: P160201
DRAWN BY: DKH
CHECKED BY: DDT
DESIGNED BY: DDT

SHEET TITLE:
PROPOSED
SANITARY SEWER
SITE PLAN

SHEET NUMBER:
C-104

6 OF 15 SHEETS
JUNE, 2019

P:\P160201 WE Sears Youth Center WW Upgrade Study\Eng\Drawings\P160201.dwg
6/21/2019 1:30 PM

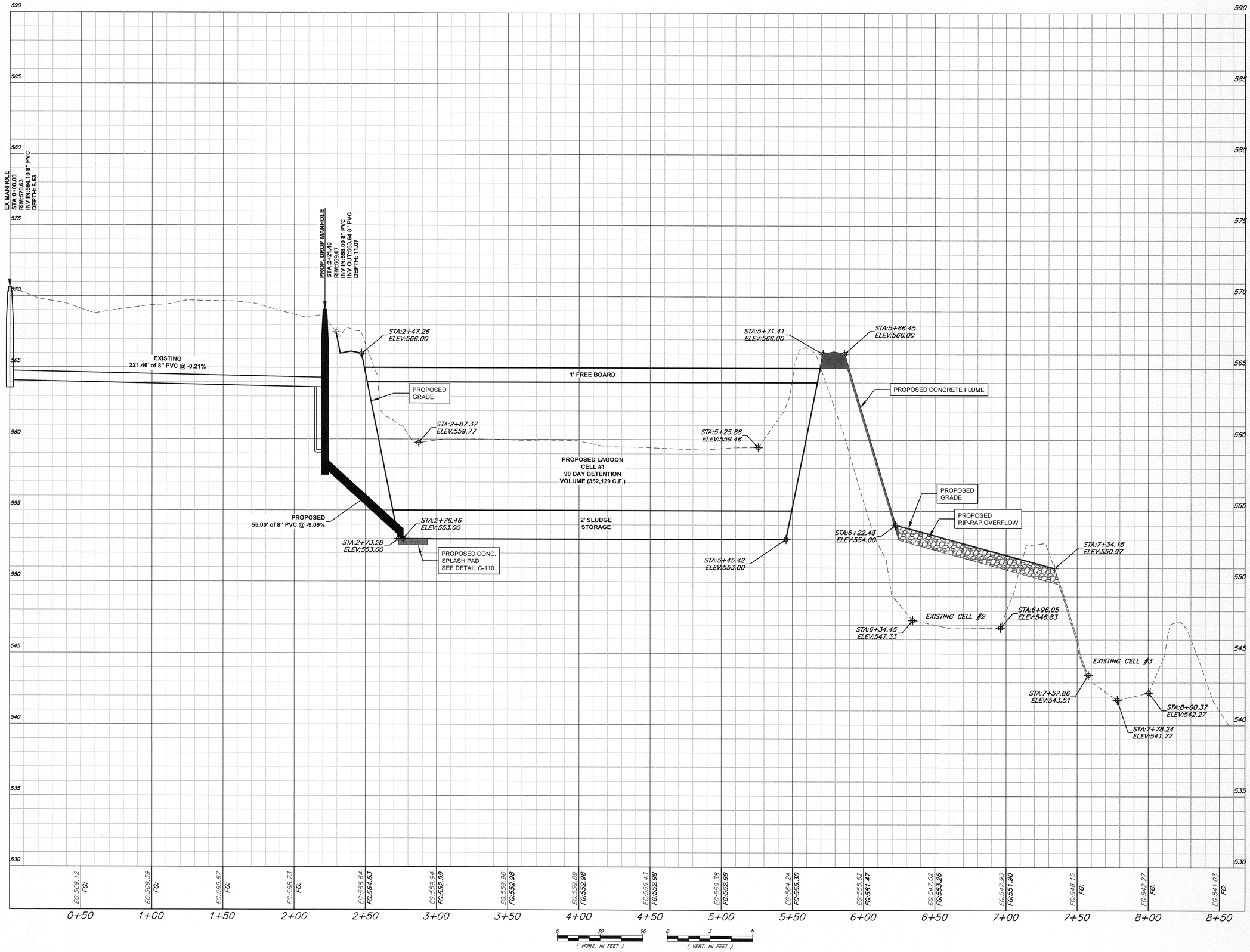

STATE OF MISSOURI
MICHAEL L. PARSON, GOVERNOR

STATE OF MISSOURI
DOMINIC D THOMPSON
NUMBER PE-2008019610
PROFESSIONAL ENGINEER
6/21/19

DOMINIC D THOMPSON
MO# PE-2008019610

ESTABLISHED 1968
AN EMPLOYEE OWNED COMPANY
SMITH&CO. ENGINEERS
901 VINE STREET; P.O. BOX 72
POPLAR BLUFF, MISSOURI 63902
(573) 785-9621 FAX: (573) 785-2651 WWW.SHSMITHCO.COM
CIVIL ENGINEERING • SURVEYING •
ENVIRONMENTAL & GEOTECHNICAL SERVICES • MATERIAL TESTING

OFFICE OF ADMINISTRATION
DIVISION OF FACILITIES MANAGEMENT, DESIGN AND CONSTRUCTION

DEPARTMENT OF SOCIAL SERVICES
DIVISION OF YOUTH SERVICES

PROJECT TITLE
W.E. SEARS YOUTH CENTER WATER AND WASTEWATER SYSTEMS UPGRADE

W.E. SEARS YOUTH CENTER
POPLAR BLUFF, MO

PROJECT # H1610-01
SITE # 5701
FACILITY # 5701-04
5701-05

REVISION:
DATE:
REVISION:
DATE:
REVISION:
DATE:
ISSUE DATE: 6/21/2019

CAD DWG FILE: P160201
DRAWN BY: DKH
CHECKED BY: DDT
DESIGNED BY: DDT

SHEET TITLE:
SANITARY SEWER HYDRAULIC PROFILE

SHEET NUMBER:
C-105

7 OF 15 SHEETS
JUNE, 2019

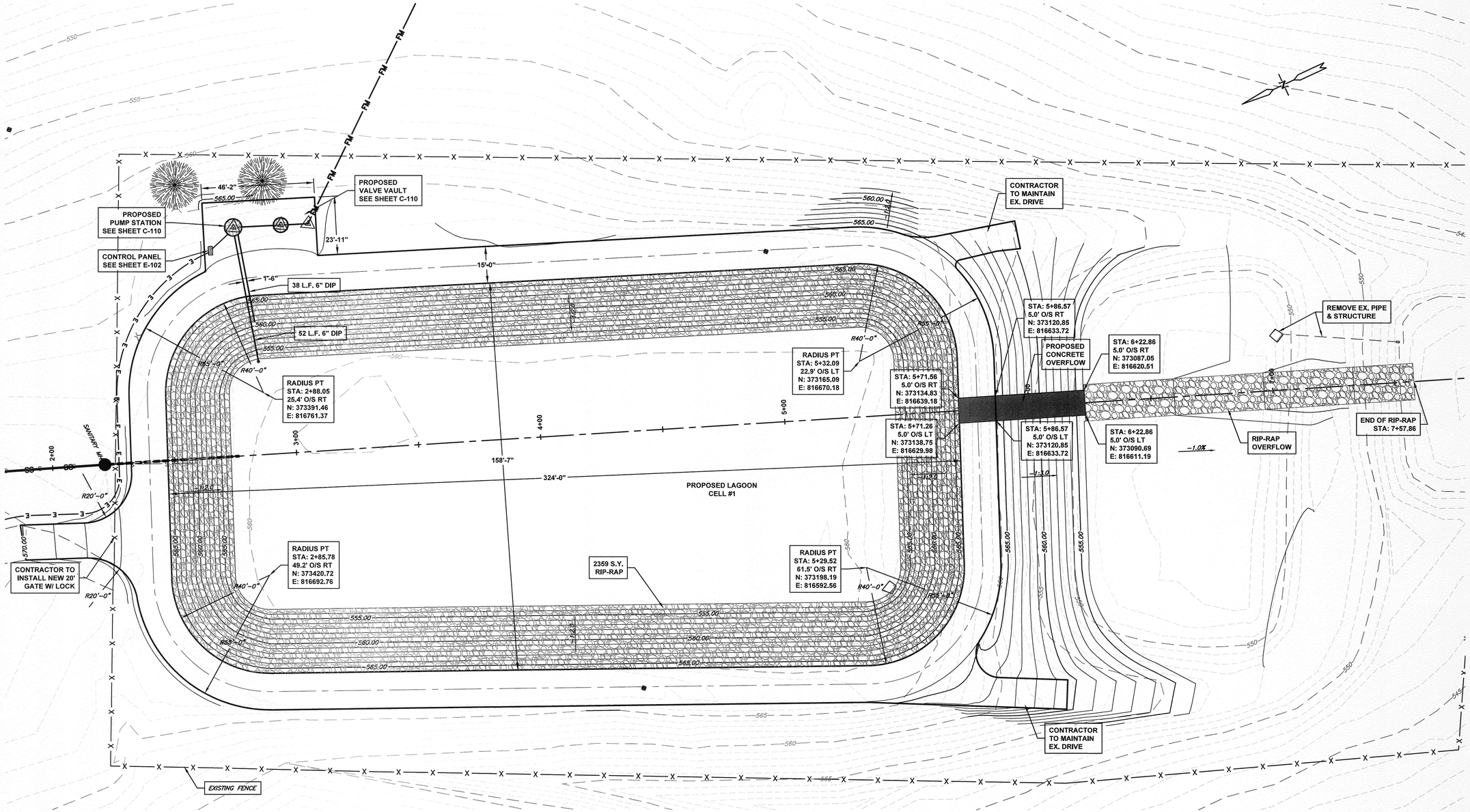

PLAN VIEW

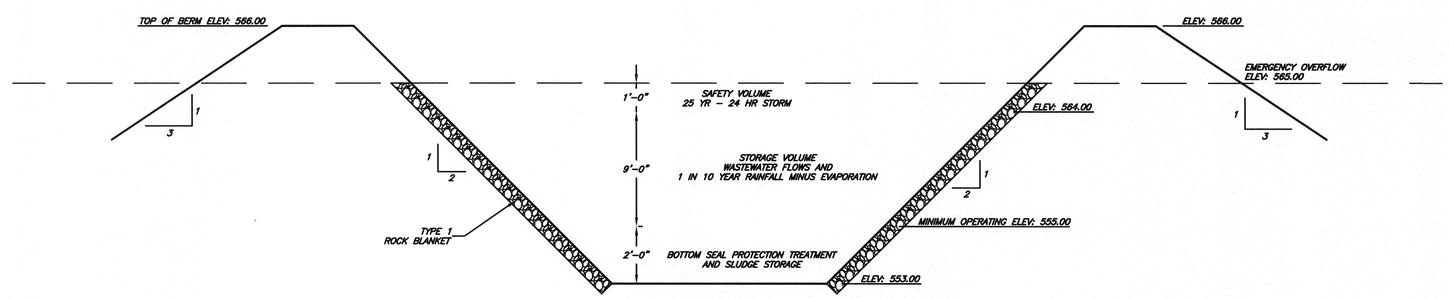

TYPICAL PROFILE VIEW

NOT TO SCALE

NOTE:

1. EXISTING CELL #3 SHALL BE USED FOR TREATMENT DURING CONSTRUCTION.
2. RIP-RAP SHALL BE PLACED ON THE INTERIOR BANK SLOPES OF THE NEW CELL.
3. A NON-WOVEN GEOTEXTILE FABRIC SHALL BE PLACED UNDER THE RIP-RAP.
4. FENCING SHALL BE RELOCATED AS NECESSARY.

P:\P160201 WE Sears Youth Center WW Upgrade Study\Eng\Drawings\P160201.dwg

6/27/2019 1:30 PM

STATE OF MISSOURI
MICHAEL L. PARSON, GOVERNOR

STATE OF MISSOURI · DOMINIC D. THOMPSON · NUMBER PE-2008019610 · PROFESSIONAL ENGINEER

DOMINIC D THOMPSON
MO# PE-2008019610

ESTABLISHED 1988 · AN EMPLOYEE OWNED COMPANY
SMITH&CO. ENGINEERS
901 VINE STREET; P.O. BOX 72
POPLAR BLUFF, MISSOURI 63902
(573) 785-9621 FAX: (573) 785-2651 WWW.SHSMITHCO.COM
CIVIL ENGINEERING • SURVEYING • ENVIRONMENTAL & GEOTECHNICAL SERVICES • MATERIAL TESTING

OFFICE OF ADMINISTRATION
DIVISION OF FACILITIES MANAGEMENT,
DESIGN AND CONSTRUCTION

DEPARTMENT OF SOCIAL SERVICES
DIVISION OF YOUTH SERVICES

PROJECT TITLE
W.E. SEARS YOUTH CENTER WATER AND WASTEWATER SYSTEMS UPGRADE

W.E. SEARS YOUTH CENTER
POPLAR BLUFF, MO

PROJECT # H1610-01
SITE # 5701
FACILITY # 5701-04
5701-05

REVISION:
DATE:
REVISION:
DATE:
REVISION:
DATE:
ISSUE DATE: 6/21/2019

CAD DWG FILE: P160201
DRAWN BY: DKH
CHECKED BY: DDT
DESIGNED BY: DDT

SHEET TITLE:
SANITARY SEWER LAGOON CELL #1 GRADING DESIGN

SHEET NUMBER:
C-106

8 OF 15 SHEETS
JUNE, 2019

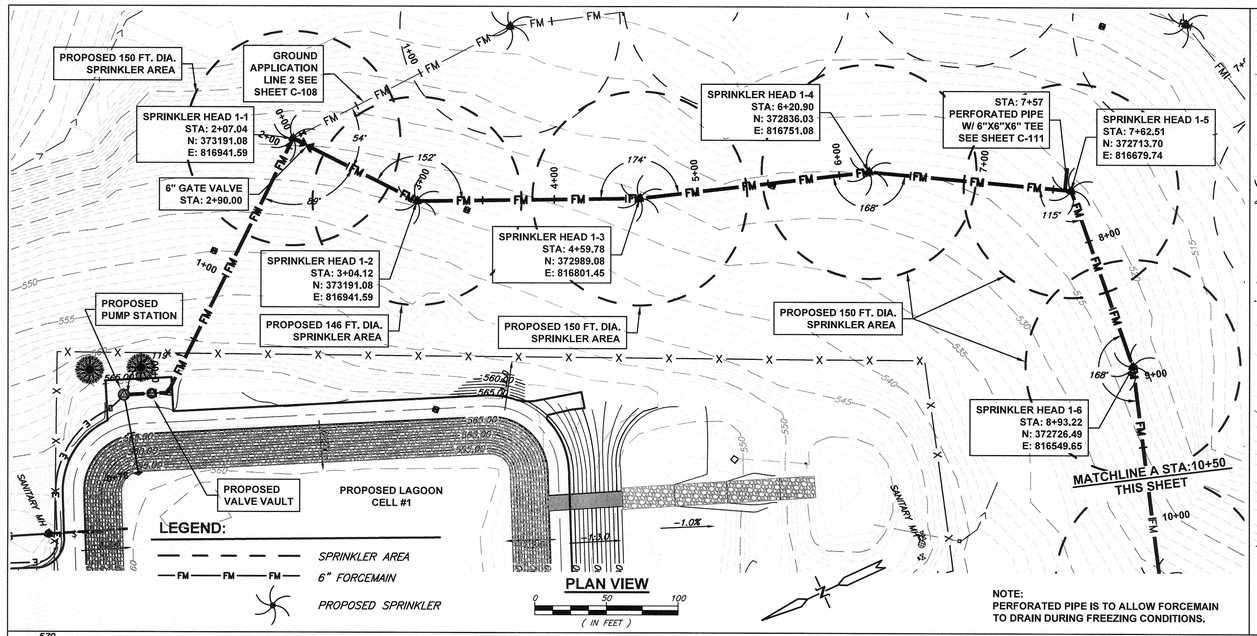

NOTE:
PERFORATED PIPE IS TO ALLOW FORCEMAIN TO DRAIN DURING FREEZING CONDITIONS.

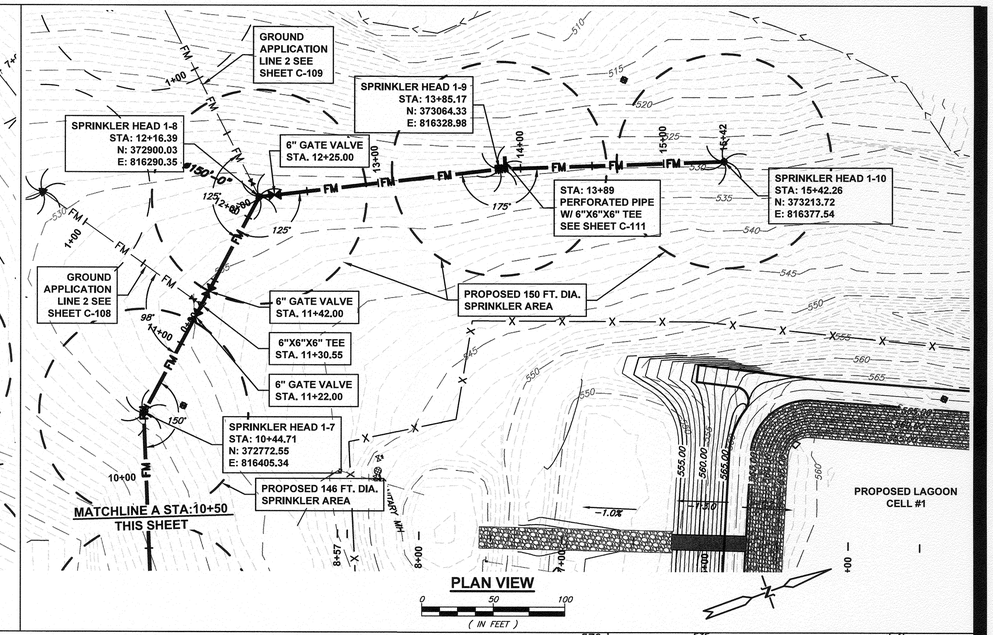

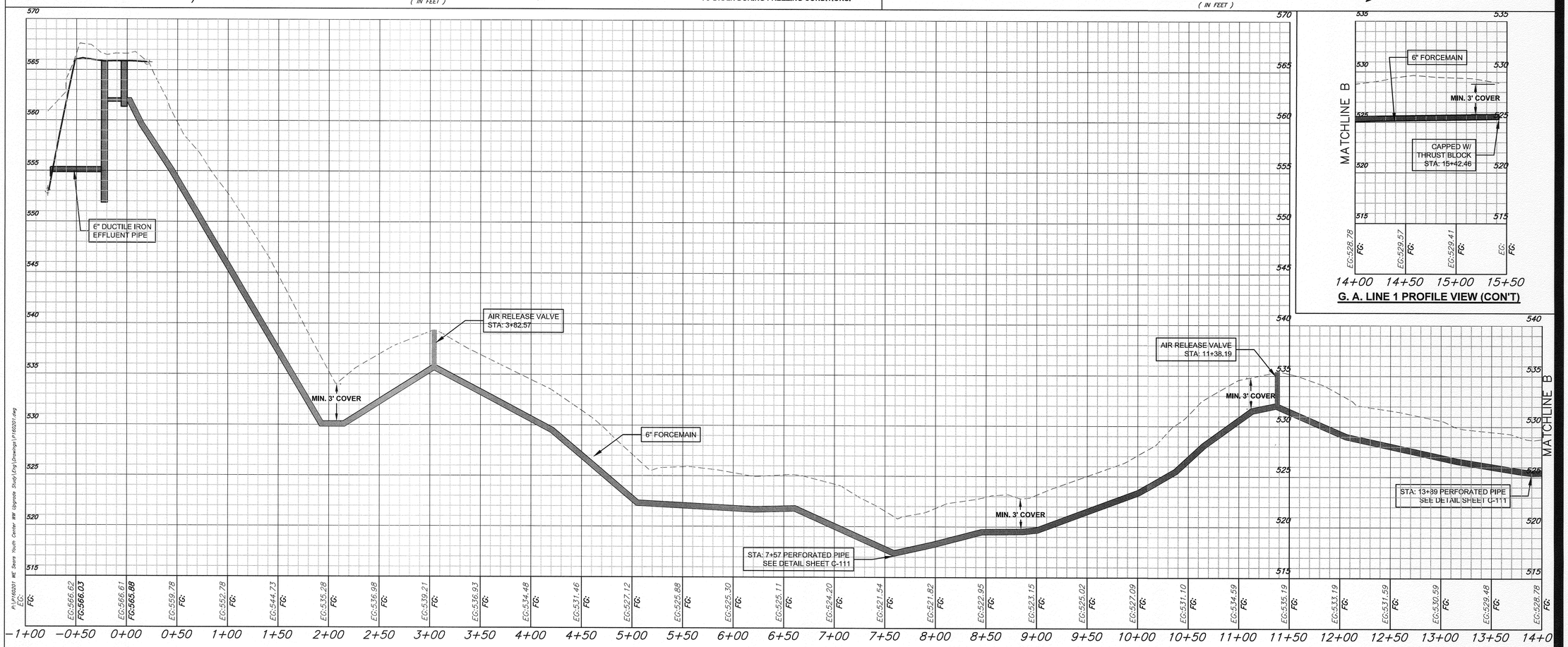

STATE OF MISSOURI
MICHAEL L. PARSON, GOVERNOR

STATE OF MISSOURI DOMINIC D THOMPSON NUMBER PE-2008019610 PROFESSIONAL ENGINEER

DOMINIC D THOMPSON
MO# PE-2008019610

AN EMPLOYEE OWNED COMPANY
ESTABLISHED 1988
SMITH&CO. ENGINEERS
901 VINE STREET; P.O. BOX 72
POPLAR BLUFF, MISSOURI 63902
(573) 785-9621 FAX: (573) 785-2651 WWW.SHSMITHCO.COM
CIVIL ENGINEERING • SURVEYING •
ENVIRONMENTAL & GEOTECHNICAL SERVICES • MATERIAL TESTING

OFFICE OF ADMINISTRATION
DIVISION OF FACILITIES MANAGEMENT,
DESIGN AND CONSTRUCTION

DEPARTMENT OF SOCIAL SERVICES
DIVISION OF YOUTH SERVICES

PROJECT TITLE
W.E. SEARS YOUTH CENTER WATER AND WASTEWATER SYSTEMS UPGRADE

W.E. SEARS YOUTH CENTER
POPLAR BLUFF, MO

PROJECT # H1601-01
SITE # 5701
FACILITY # 5701-04
5701-05

REVISION:
DATE:
REVISION:
DATE:
REVISION:
DATE:
REVISION:
DATE:
ISSUE DATE: 6/21/2019

CAD DWG FILE: P160201
DRAWN BY: DKH
CHECKED BY: DDT
DESIGNED BY: DDT

SHEET TITLE:
SANITARY SEWER GROUND APPL. PLAN & PROFILE

SHEET NUMBER:
C-107

9 OF 15 SHEETS
JUNE, 2019

P:\P160201 WE Sears Youth Center WW Upgrade Study\Eng\Drawings\P160201.dwg
6/21/2019 1:33 PM

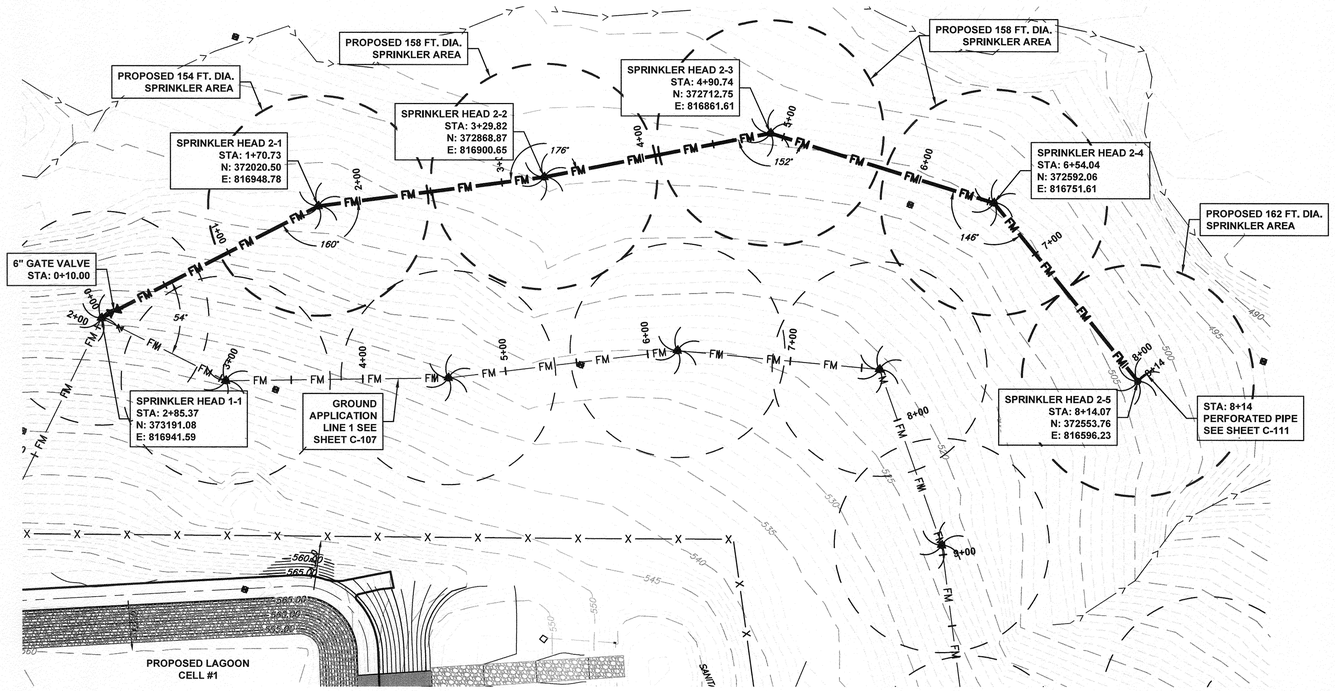

GROUND APPLICATION LINE 2 PLAN VIEW

0 50 100
(IN FEET)

NOTE:
PERFORATED PIPE IS TO ALLOW FORCEMAIN TO DRAIN DURING FREEZING CONDITIONS.

LEGEND:

- SPRINKLER AREA
- 6" FORCEMAIN
- PROPOSED SPRINKLER

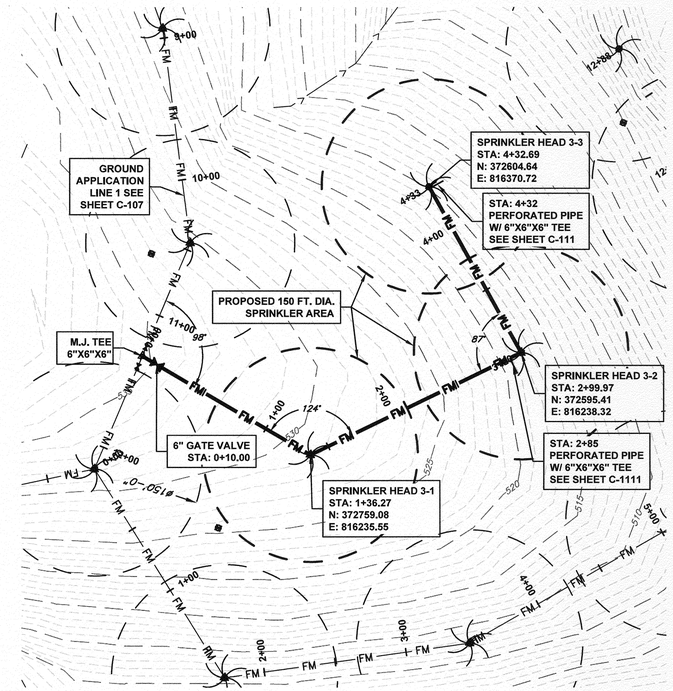

GROUND APPLICATION LINE 3 PLAN VIEW

0 50 100
(IN FEET)

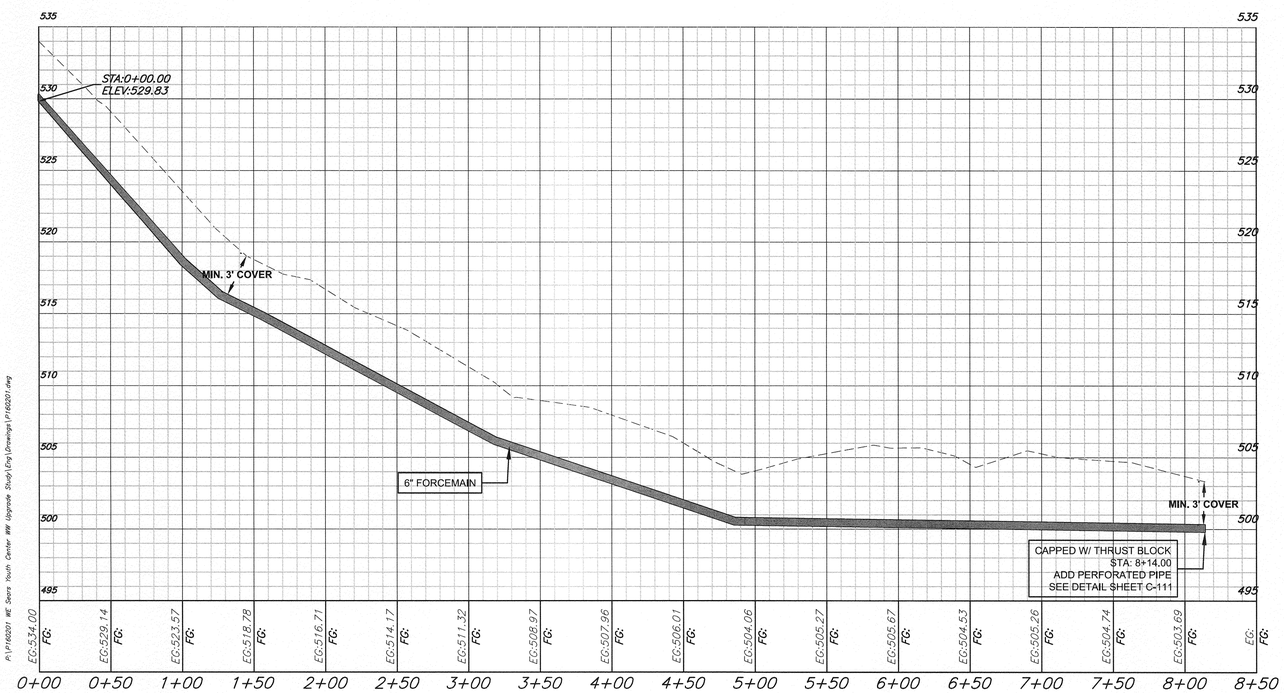

GROUND APPLICATION LINE 2 PROFILE VIEW

0 50 100 (HORZ. IN FEET)
0 5 10 (VERT. IN FEET)

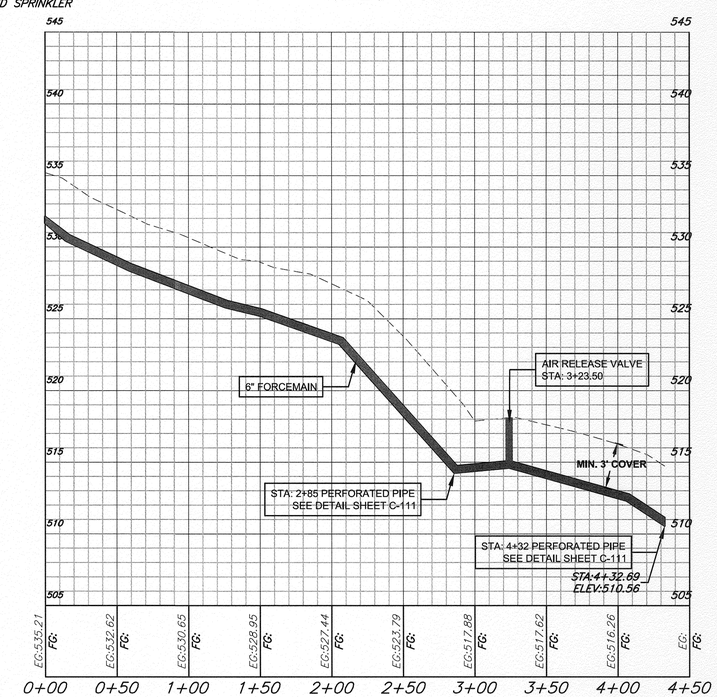

GROUND APPLICATION LINE 3 PROFILE VIEW

0 50 100 (HORZ. IN FEET)
0 5 10 (VERT. IN FEET)

P:\P160201 WE Sears Youth Center WW Upgrade Study\Eng\Drawings\P160201.dwg

6/27/2019 1:30 PM

STATE OF MISSOURI
MICHAEL L. PARSON, GOVERNOR

STATE OF MISSOURI
DOMINIC D THOMPSON
NUMBER PE-2008019610
PROFESSIONAL ENGINEER
6/21/19

DOMINIC D THOMPSON
MO# PE-2008019610

ESTABLISHED 1988
SMITH&CO. ENGINEERS
AN EMPLOYEE OWNED COMPANY
901 VINE STREET; P.O. BOX 72
POPLAR BLUFF, MISSOURI 63902
(573) 785-9621 FAX: (573) 785-2851 WWW.SHSMITHCO.COM
CIVIL ENGINEERING • SURVEYING •
ENVIRONMENTAL & GEOTECHNICAL SERVICES • MATERIAL TESTING

OFFICE OF ADMINISTRATION
DIVISION OF FACILITIES MANAGEMENT,
DESIGN AND CONSTRUCTION

DEPARTMENT OF SOCIAL SERVICES
DIVISION OF YOUTH SERVICES

PROJECT TITLE
W.E. SEARS YOUTH CENTER
WATER AND
WASTEWATER SYSTEMS
UPGRADE

W.E. SEARS YOUTH CENTER
POPLAR BLUFF, MO

PROJECT # H1601-01
SITE # 5701
FACILITY # 5701-04
5701-05

REVISION:
DATE:
REVISION:
DATE:
REVISION:
DATE:
ISSUE DATE: 6/21/2019

CAD DWG FILE: P160201
DRAWN BY: DKH
CHECKED BY: DDT
DESIGNED BY: DDT

SHEET TITLE:
SANITARY SEWER
GROUND APPL.
PLAN & PROFILE

SHEET NUMBER:
C-108

10 OF 15 SHEETS
JUNE, 2019

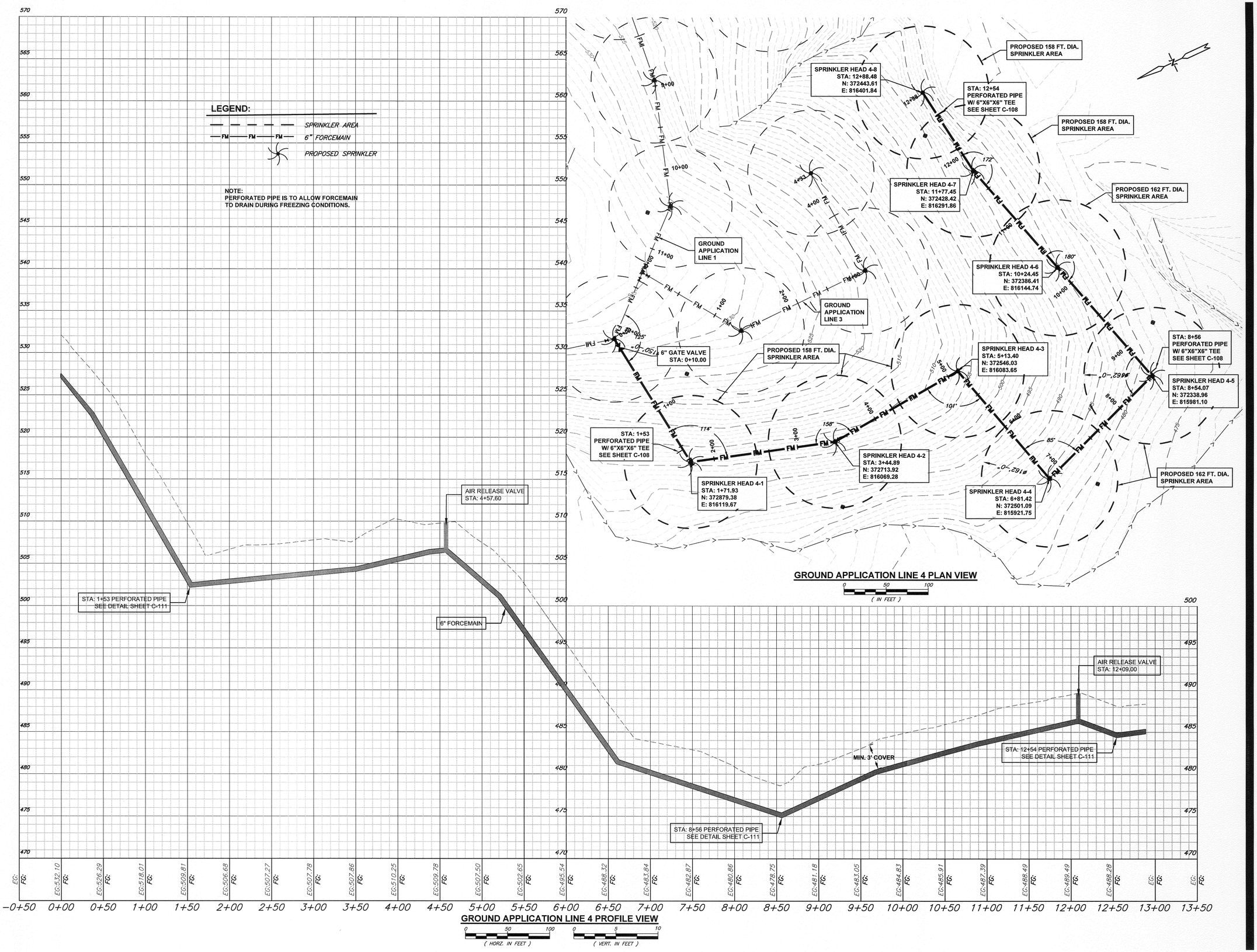

STATE OF MISSOURI
MICHAEL L. PARSON, GOVERNOR

STATE OF MISSOURI DOMINIC D THOMPSON NUMBER PE-2008019610 PROFESSIONAL ENGINEER

DOMINIC D THOMPSON
MO# PE-2008019610

ESTABLISHED 1988 — AN EMPLOYEE OWNED COMPANY
SMITH&CO. ENGINEERS
901 VINE STREET; P.O. BOX 72
POPLAR BLUFF, MISSOURI 63902
(573) 785-9621 FAX: (573) 785-2651 WWW.SHSMITHCO.COM
CIVIL ENGINEERING • SURVEYING • ENVIRONMENTAL & GEOTECHNICAL SERVICES • MATERIAL TESTING

OFFICE OF ADMINISTRATION
DIVISION OF FACILITIES MANAGEMENT,
DESIGN AND CONSTRUCTION

DEPARTMENT OF SOCIAL SERVICES
DIVISION OF YOUTH SERVICES

PROJECT TITLE
W.E. SEARS YOUTH CENTER WATER AND WASTEWATER SYSTEMS UPGRADE

W.E. SEARS YOUTH CENTER
POPLAR BLUFF, MO

PROJECT # H1601-01
SITE # 5701
FACILITY # 5701-04
5701-05

REVISION:
DATE:
REVISION:
DATE:
REVISION:
DATE:
ISSUE DATE: 6/21/2019

CAD DWG FILE: P160201
DRAWN BY: DKH
CHECKED BY: DDT
DESIGNED BY: DDT

SHEET TITLE:
SANITARY SEWER GROUND APPL. PLAN & PROFILE

SHEET NUMBER:
C-109

11 OF 15 SHEETS
JUNE, 2019

P:\P160201 WE Sears Youth Center WW Upgrade Study\Eng\Drawings\P160201.dwg
6/27/2019 1:31 PM

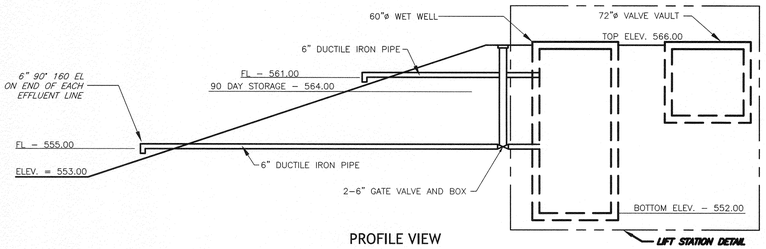

PROFILE VIEW

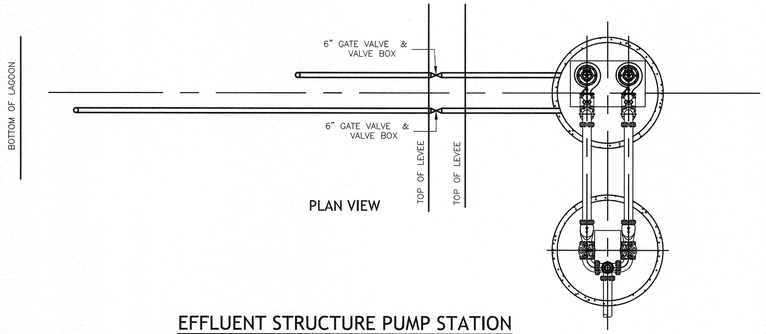

PLAN VIEW

EFFLUENT STRUCTURE PUMP STATION

NOT TO SCALE

STANDARD FEATURES:

- ALL ALUMINUM BASKET AND RAILS
- SOLID ALUMINUM WHEELS AND STAINLESS STEEL AXLES
- HEAVY DUTY LADDER/GUIDERAIL COMBINATION
- 1 3/8" TYPE "D" RUNG WITH FLAT SLIP RESISTANT SURFACE
- BAR SCREEN STYLE BASKET
- STANDOFF LENGTH (7" MIN FOR LADDER COMBO)

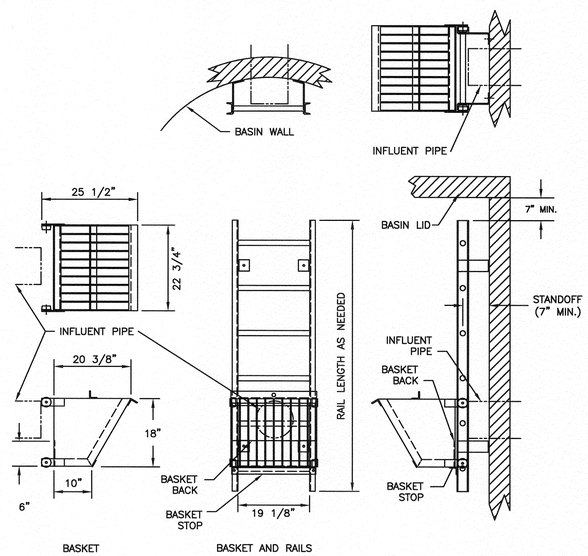

TRASH BASKET

SCALE: N.T.S.

NOTE:
1. STEPS TO BE INSTALLED IN A VERTICAL ROW ON 16" CENTERS.
2. MANHOLE STEPS MUST BE IN COMPLIANCE WITH O.S.H.A. & A.S.T.M. REGULATIONS.

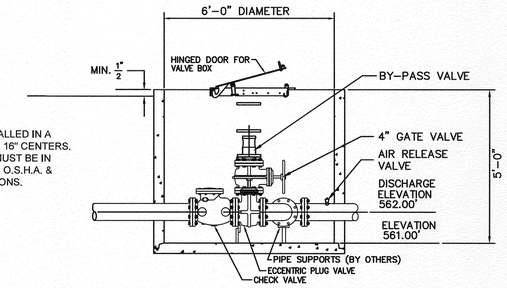

VALVE VAULT SECTION DETAIL

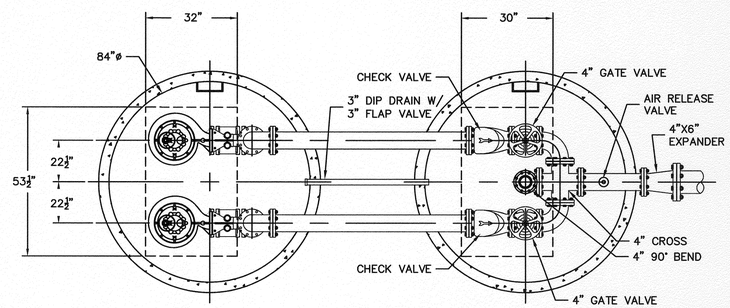

PLAN VIEW

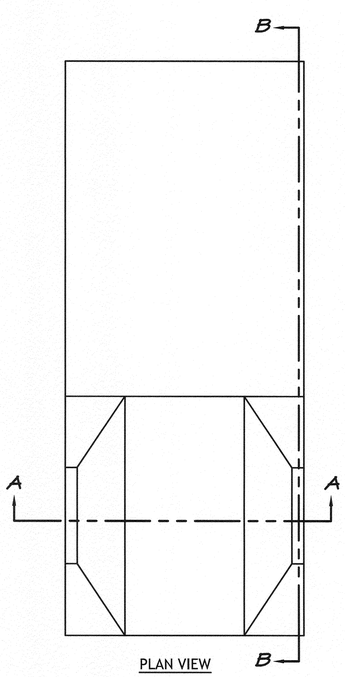

PLAN VIEW

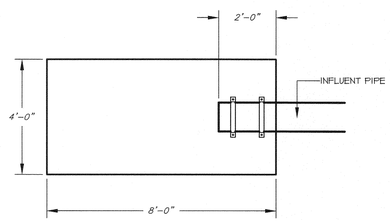

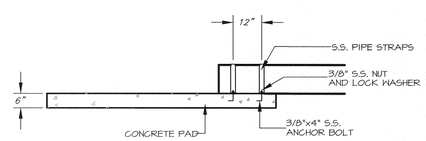

CONCRETE SPLASH PAD

NOT TO SCALE

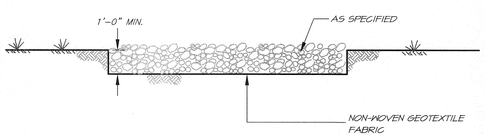

RIP RAP DETAIL

NOT TO SCALE

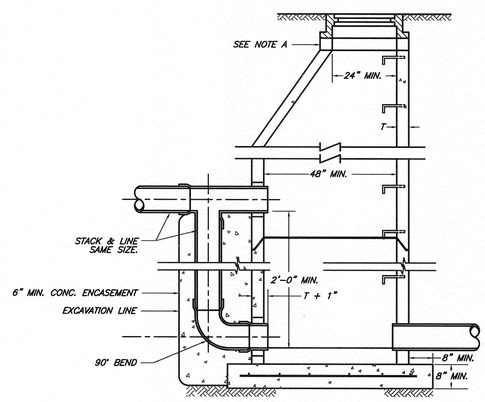

DROP MANHOLE

NOT TO SCALE

OUTER DOOR HAS BEEN REMOVED FOR CLARITY

NOTE:
1. GFCI DUPLEX OUTLET, 110 VAC, 1 PHASE, 20 AMP OUTLET TO BE INCLUDED WITHIN ELECTRICAL PANEL.

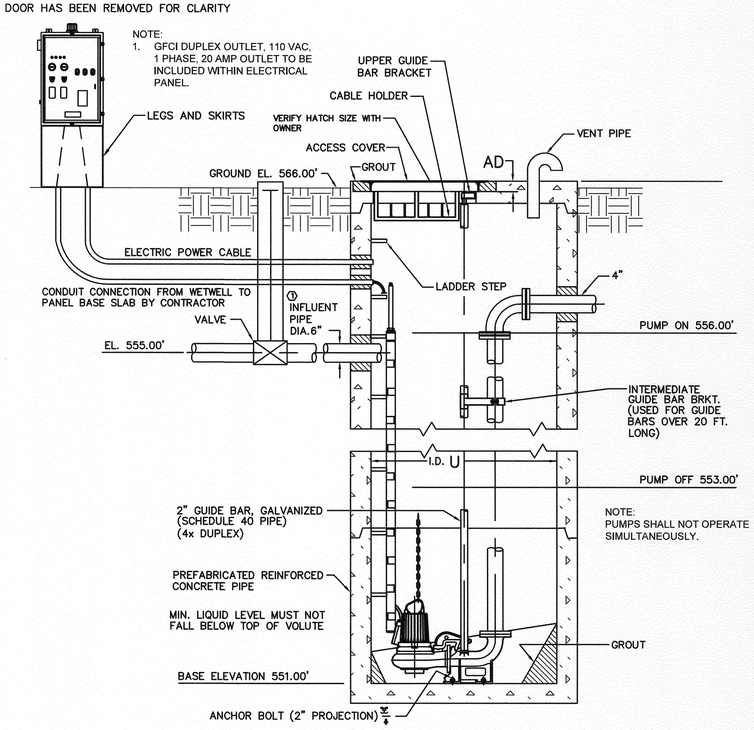

NOTE:
PUMPS SHALL NOT OPERATE SIMULTANEOUSLY.

WET WELL SECTION DETAIL

LIFT STATION DETAIL

NOT TO SCALE

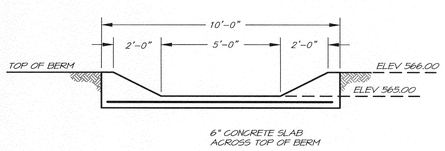

DETAIL A-A

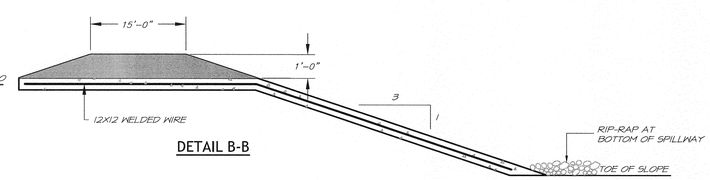

DETAIL B-B

EMERGENCY OVERFLOW

NOT TO SCALE

P:\P160201 WE Sears Youth Center WW Upgrade Study\Eng\Drawings\P160201.dwg

6/21/2019 1:31 PM

STATE OF MISSOURI
MICHAEL L. PARSON,
GOVERNOR

STATE OF MISSOURI · DOMINIC D THOMPSON · NUMBER PE-2008019610 · PROFESSIONAL ENGINEER

DOMINIC D THOMPSON
MO# PE-2008019610

ESTABLISHED 1888 · AN EMPLOYEE OWNED COMPANY
SMITH&CO. ENGINEERS
901 VINE STREET; P.O. BOX 72
POPLAR BLUFF, MISSOURI 63902
(573) 785-9621 FAX: (573) 785-2651 WWW.SHSMITHCO.COM
CIVIL ENGINEERING • SURVEYING • ENVIRONMENTAL & GEOTECHNICAL SERVICES • MATERIAL TESTING

OFFICE OF ADMINISTRATION
DIVISION OF FACILITIES MANAGEMENT,
DESIGN AND CONSTRUCTION

DEPARTMENT OF SOCIAL SERVICES
DIVISION OF YOUTH SERVICES

PROJECT TITLE
W.E. SEARS YOUTH CENTER WATER AND WASTEWATER SYSTEMS UPGRADE

W.E. SEARS YOUTH CENTER
POPLAR BLUFF, MO

PROJECT # H1610-01
SITE # 5701
FACILITY # 5701-04
5701-05

REVISION:
DATE:
REVISION:
DATE:
REVISION:
DATE:

ISSUE DATE: 6/21/2019

CAD DWG FILE: P160201
DRAWN BY: DKH
CHECKED BY: DDT
DESIGNED BY: DDT

SHEET TITLE:
SANITARY SEWER CONSTRUCTION DETAILS

SHEET NUMBER:
C-110

12 OF 15 SHEETS
JUNE, 2019

NOTE:
VALVES SHALL REMAIN CLOSED AT ALL TIMES. THE VALVES SHALL ONLY BE OPENED TO DRAIN LINES PRIOR TO WINTER MONTHS.

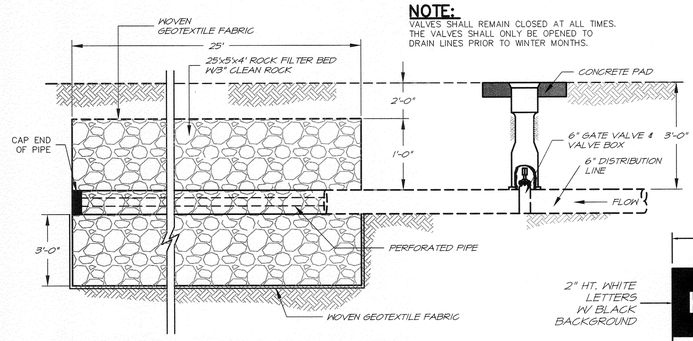

PERFORATED PIPE (FORCEMAIN DRAIN) DETAIL

NOT TO SCALE

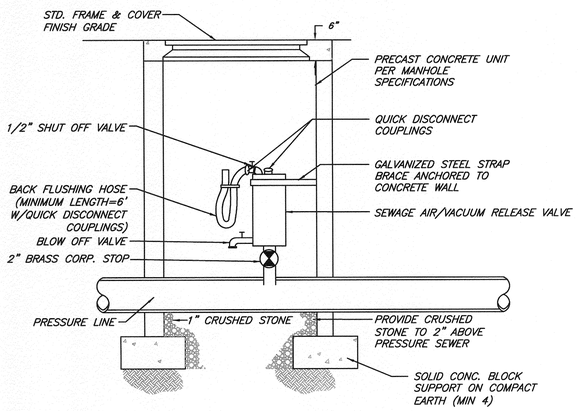

AIR/VACUUM RELEASE VALVE VAULT

NOT TO SCALE

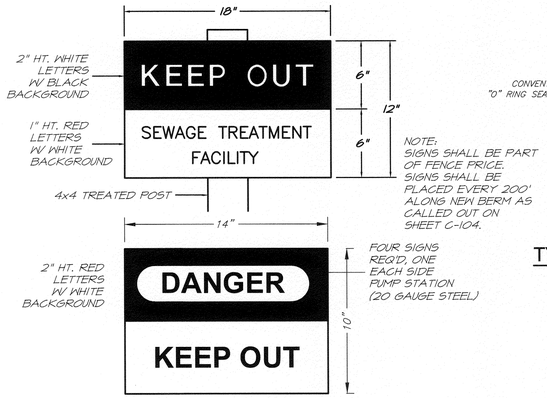

NOTE:
SIGNS SHALL BE PART OF FENCE PRICE. SIGNS SHALL BE PLACED EVERY 200' ALONG NEW BERM AS CALLED OUT ON SHEET C-104.

FOUR SIGNS REQ'D. ONE EACH SIDE PUMP STATION (20 GAUGE STEEL)

WARNING SIGNS

NOT TO SCALE

NOTE:
CONCRETE PAD NOT REQUIRED IN BITUMINOUS OR CONCRETE PAVEMENT.

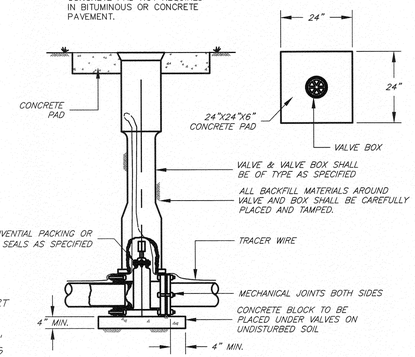

TYPICAL GATE VALVE & VALVE BOX DETAIL

NOT TO SCALE

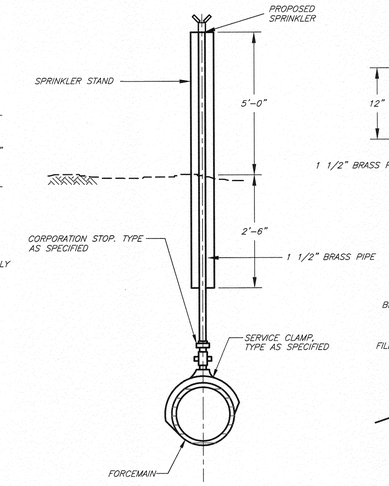

TYPICAL SPRINKLER CONNECTION

NOT TO SCALE

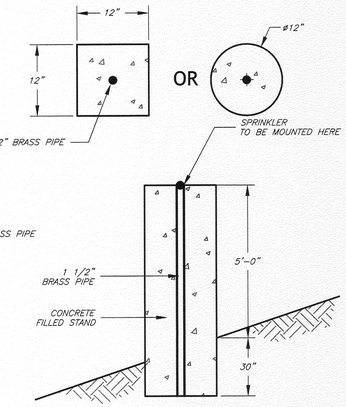

SPRINKLER STAND DETAIL

NOTE:
EACH STAND SHALL BE STAMPED OR ETCHED WITH SPRINKLER HEAD NUMBER AS LISTED ON PLANS

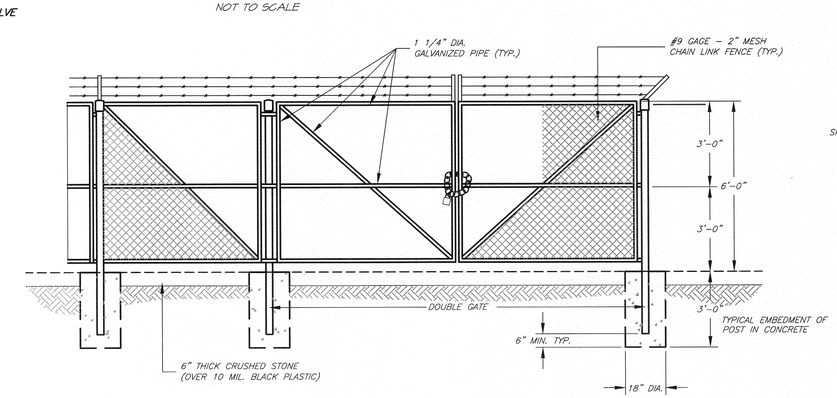

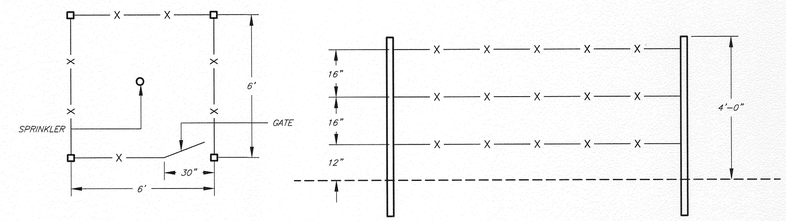

BARB WIRE FENCE DETAIL

NOT TO SCALE

NOTES:
ALL COMPACTED BACKFILL MATERIALS SHALL BE PLACED & COMPACTED IN LIFTS OF NO MORE THAN 8".

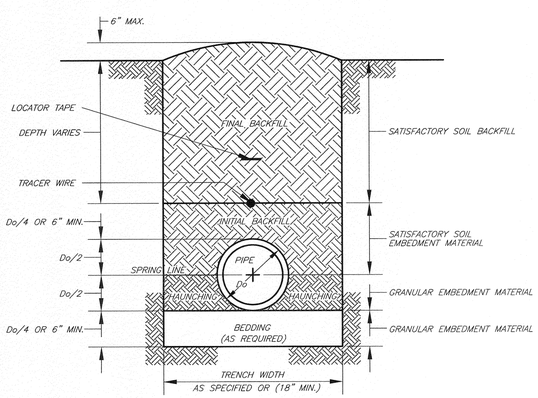

* Do=OUTSIDE DIAMETER OF PIPE
* COMPACT ALL MATERIALS PER SPECIFICATIONS

TYPICAL BEDDING DETAIL

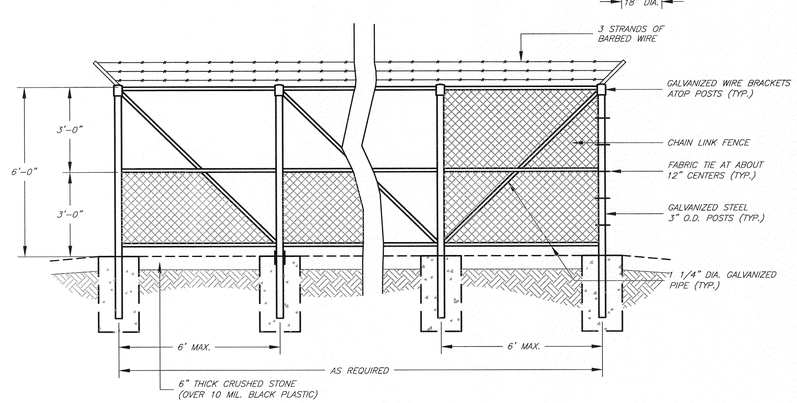

TYPICAL CHAIN-LINK FENCE DETAILS AT WELL NO. 2

NOT TO SCALE

NOTE:
ALL THRUST BLOCKS ARE TO BEAR AGAINST UNDISTURBED SOIL. ALL CONCRETE TO BE 3000 PSI. (MIN) TIE ROD RESTRAINTS MAY BE REQ'D. UNDER CERTAIN CONDITIONS. ALL MECHANICAL JOINTS TO HAVE JOINT RESTRAINTS.

PIPE SIZE	THRUST BLOCK BEARING SURFACE AREA	APPROXIMATE VOLUME OF THRUST BLOCK
2"-4"	4 SQ. FT.	2-1/2 CU. FT.
6"-8"	6 SQ. FT.	3 CU. FT.
10"	7 SQ. FT.	3-1/2 CU. FT.
12"	9 SQ. FT.	4-1/2 CU. FT.

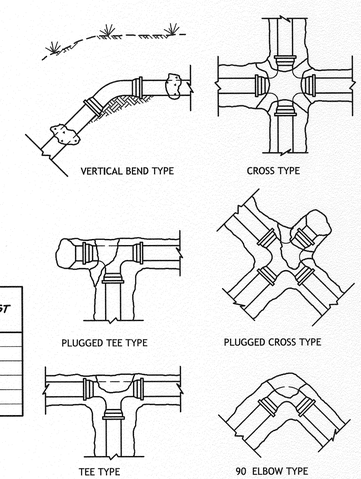

TYPICAL THRUST BLOCK DETAILS

NOT TO SCALE

P:\P160201 WE Sears Youth Center WW Upgrade Study\Eng\Drawings\P160201.dwg

6/25/2019 1:37 PM

STATE OF MISSOURI
MICHAEL L. PARSON, GOVERNOR

STATE OF MISSOURI DOMINIC D THOMPSON NUMBER PE-2008019610 PROFESSIONAL ENGINEER

DOMINIC D THOMPSON
MO# PE-2008019610

AN EMPLOYEE OWNED COMPANY
ESTABLISHED 1968
SMITH&CO. ENGINEERS
901 VINE STREET; P.O. BOX 72
POPLAR BLUFF, MISSOURI 63902
(573) 785-9621 FAX: (573) 785-2851 WWW.SHSMITHCO.COM
CIVIL ENGINEERING • SURVEYING • ENVIRONMENTAL & GEOTECHNICAL SERVICES • MATERIAL TESTING

OFFICE OF ADMINISTRATION
DIVISION OF FACILITIES MANAGEMENT,
DESIGN AND CONSTRUCTION

DEPARTMENT OF SOCIAL SERVICES
DIVISION OF YOUTH SERVICES

PROJECT TITLE
W.E. SEARS YOUTH CENTER WATER AND WASTEWATER SYSTEMS UPGRADE

W.E. SEARS YOUTH CENTER
POPLAR BLUFF, MO

PROJECT # H1610-01
SITE # 5701
FACILITY # 5701-04
5701-05

REVISION:
DATE:
REVISION:
DATE:
REVISION:
DATE:
ISSUE DATE: 6/21/2019

CAD DWG FILE: P160201
DRAWN BY: DKH
CHECKED BY: DDT
DESIGNED BY: DDT

SHEET TITLE:
SANITARY SEWER CONSTRUCTION DETAILS

SHEET NUMBER:
C-111

13 OF 15 SHEETS
JUNE, 2019

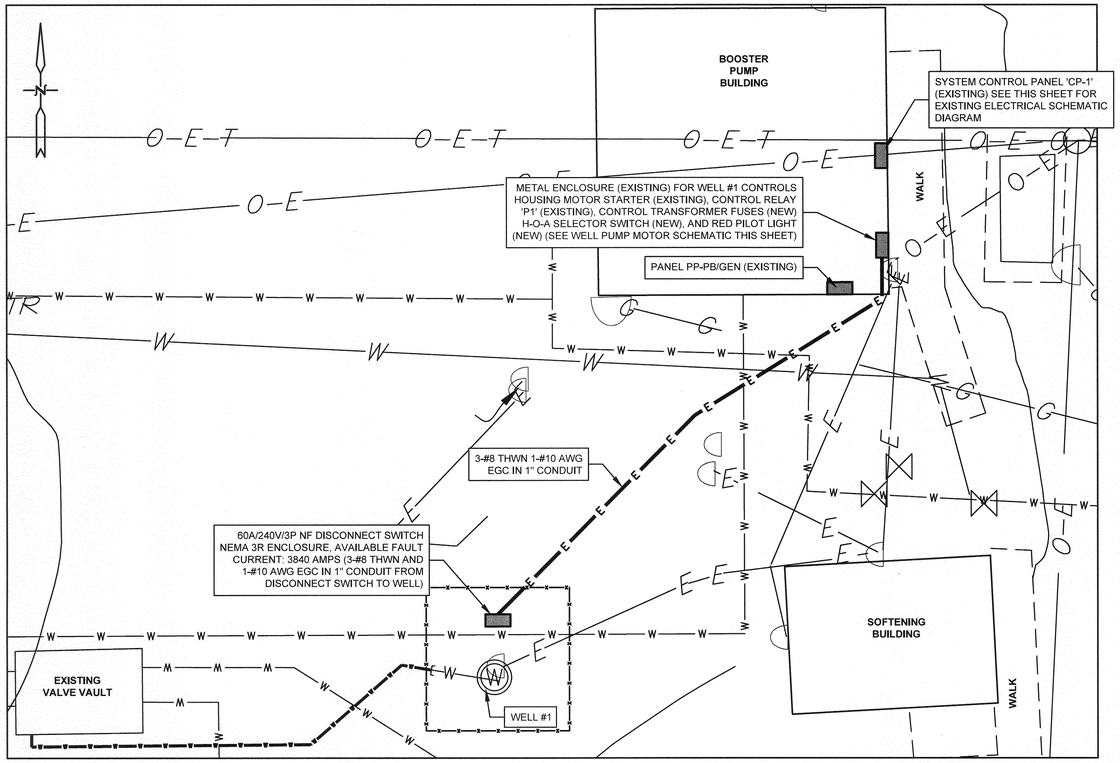

ELECTRICAL SITE PLAN

0 5 10 (IN FEET)

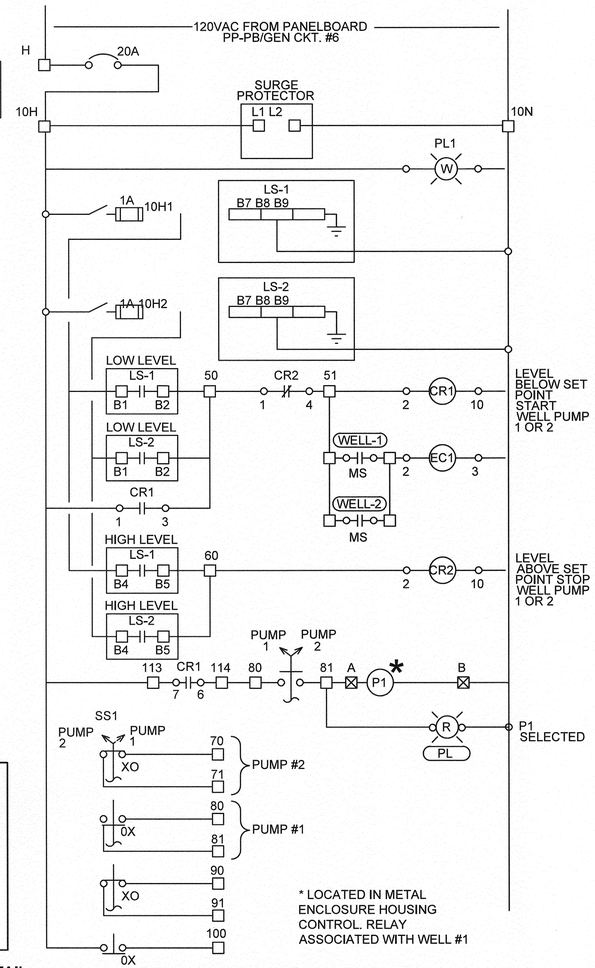

EXISTING CP-1 ELECTRICAL SCHEMATIC

(SHOWN FOR INFORMATIONAL PURPOSE ONLY NO MODIFICATIONS REQ'D)

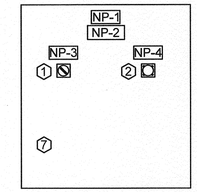

WELL #1 CONTROLLER FRONT DOOR PANEL

NOT TO SCALE

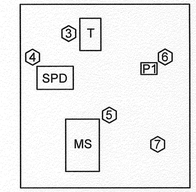

WELL #1 CONTROLLER INTERIOR LAYOUT

NOT TO SCALE

KEYED NOTES

1. HAND-OFF-AUTO SELECTOR SWITCH
2. RED PILOT LIGHT, 120V LED, 30.5 MM
3. 100 VA CONTROL TRANSFORMER, 240V PRIMARY/120V SECONDARY
4. 40 KA PER PHASE SURGE PROTECTION DEVICE, 240V/3 PHASE
5. EXISTING MOTOR STARTER, REMOVE EXISTING WIRING AND WIRE IN ACCORDANCE WITH WELL PUMP #1 WIRING SCHEMATIC
6. EXISTING CONTROL RELAY, REMOVE EXISTING CONTROL WIRING TO EXISTING WELL #1 CONTROLLER AND REWIRE IN ACCORDANCE WITH WELL PUMP #1 WIRING SCHEMATIC.
7. EXISTING METAL ENCLOSURE

NAME PLATE SCHEDULE

NP NO.	DESCRIPTION	SIZE
NP-1	WELL PUMP #1 *	6"X2 1/2" 1/2" LETTERS
NP-2	WARNING - POWER FED FROM PANEL PP-PB/GEN **	6"X2 1/2" 1/2" LETTERS
NP-3	HAND-OFF-AUTO *	STANDARD LEGEND PLATE
NP-4	PUMP #1 RUNNING *	1"X2"

* 1/8" THICK LAMINATED PLASTIC, BLACK BACKGROUND WITH WHITE LETTERS

** 1/8" THICK LAMINATED PLASTIC, RED BACKGROUND WITH WHITE LETTERS

GENERAL NOTES:

1. THESE DRAWINGS AND DIAGRAMMATIE, LOCATIONS AND SIZES SHOWN ARE BASED ON EXISTING DOCUMENTATION AND/OR OBSERVED SITE CONDITIONS. PRIOR TO BEGINNING WORK, NOTIFY THE ENGINEER OF ANY DISCREPANCIES BETWEEN THE DRAWINGS AND ACTUAL CONDITIONS.
2. ALL ELECTRICAL WORK SHALL BE IN ACCORDANCE WITH THE LATEST EDITION OF THE NATIONAL ELECTRICAL CODE AND ALL LOCAL CITY CODES AND ORDINANCES.
3. ALL GROUNDING AND BONDING SHALL BE IN ACCORDANCE WITH ARTICLE 250 OF THE NEC.
4. ALL PANELBOARDS, BREAKERS, DISCONNECT SWITCHES, AND FUSES SHALL HAVE MINIMUM SHORT CIRCUIT CURRENT RATING AS REQUIRED BY THE LATEST EDITION OF THE NATIONAL ELECTRIC CODE, THE ELECTRICAL CONTRACTOR SHALL VERIFY BUILDING TRANSFORMER KVA AND IMPEDANCE RATING WITH LOCAL POWER COMPANY AND INSTALL ALL OVERCURRENT PROTECTIVE DEVICES, PANELBOARDS, AND DISCONNECT SWITCHES TO MEET MINIMUM SHORT CIRCUIT CURRENT RATING REQUIREMENTS.
5. ALL WIRE SHALL BE THWN IN CONDUIT WITH EQUIPMENT GROUND WIRE, UNLESS NOTED OTHERWISE.
6. ALL CONDUIT WITHIN INTERIOR OF BUILDING SHALL BE EXPOSED ELECTRICAL METALLIC TUBING WITH COMPRESSION FITTINGS UNLESS NOTED OTHERWISE.
7. ALL CONTROL WIRING SHALL BE #14 AWG, STRANDED COPPER 600V, TYPE THWN INSULATION UNLESS NOTED OTHERWISE.
8. ALL UNDERGROUND CONDUITS SHALL BE PVC SCHEDULE 40, BURIED AT A MINIMUM DEPTH OF 18" IN OPEN AREA, AND 24" BELOW ROADWAYS, DRIVEWAYS, AND PARKING LOTS. A MAGNETIC WARNING RIBBON SHALL BE PLACED 12" ABOVE TOP OF CONDUIT. ALL DISTURBED ROADWAYS, DRIVEWAYS, AND PARKING LOTS SHALL BE RESTORED TO ORIGINAL CONDITION.
9. CONDUIT EXPOSED TO PHYSICAL DAMAGE AND PENETRATING CONCRETE FLOOR OR SLAB SHALL BE RIGID GALVANIZED STEEL OR PVC SCHEDULE 80
10. ALL OUTLETS AND JUNCTION BOXES WITHIN INTERIOR OF BUILDING MAY BE SURFACE MOUNTED UNLESS NOTED OTHERWISE.
11. OVERCURRENT PROTECTION DEVICES, VOLTAGES, AND WIRE SIZES FOR EQUIPMENT IS BASED UPON EQUIPMENT INFORMATION AVAILABLE AT THE TIME OF ISSUANCE OF THESE DRAWINGS. CONTRACTOR SHALL VERIFY ELECTRICAL REQUIREMENTS OF ALL PROJECT RELEVANT EQUIPMENT PRIOR TO INSTALLING CONDUIT AND WIRING INTENDED FOR THE EQUIPMENT, AND NOTIFY ENGINEER PRIOR TO COMMENCING THE WORK IN CASE OF CONFLICTING INFORMATION.
12. USE LFMC CONDUIT FOR ALL FINAL CONDUIT CONNECTIONS TO MECHANICAL EQUIPMENT.
13. ALL OUTSIDE CONDUITS TERMINATING IN PULL BOXES, JUNCTION BOXES, DISCONNECT SWITCHES, CONTROL PANEL, AND PANELBOARDS SHALL BE SEALED WITH APPROVED CONDUIT SEALER..
14. CONTRACTOR SHALL FURNISH 3 1/2"X2" (MINIMUM SIZE) ARC FLASH WARNING LABEL ON FACE OF ALL SWITCHBOARDS, PANELBOARDS, DISCONNECT SWITCHES, METER SOCKET ENCLOSURES, AND MOTOR CONTROL CENTERS AS REQUIRED BY NEC.
15. CONTRACTOR SHALL FURNISH AND INSTALL ALL CONDUIT, CONTROL WIRING, CONTROLS, AND CONTROL WIRE MODIFICATIONS AS REQUIRED FOR A COMPLETE FUNCTIONAL SYSTEM.
16. ALL APPROVED CHANGES MUST BE DRAWN AND NOTED, BY ELECTRICAL CONTRACTOR ON A CLEAN COPY OF THE DRAWING(S).

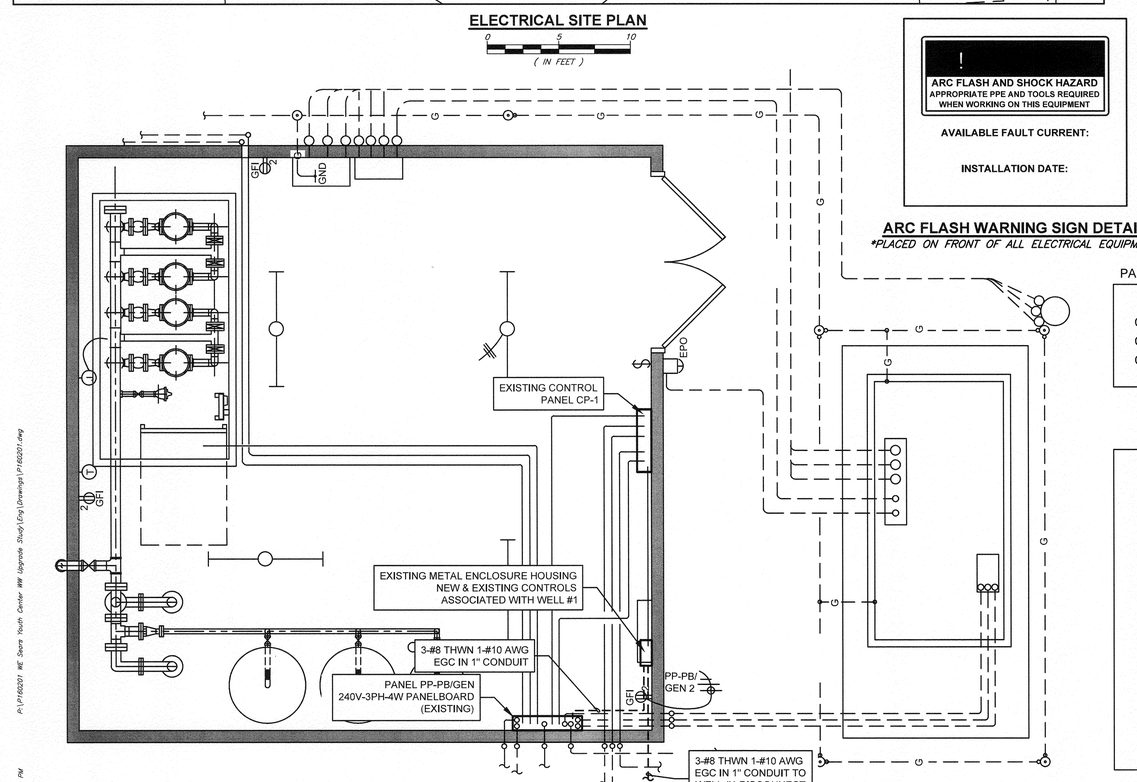

BOOSTER PUMP BUILDING ELECTRICAL PLAN

NOT TO SCALE

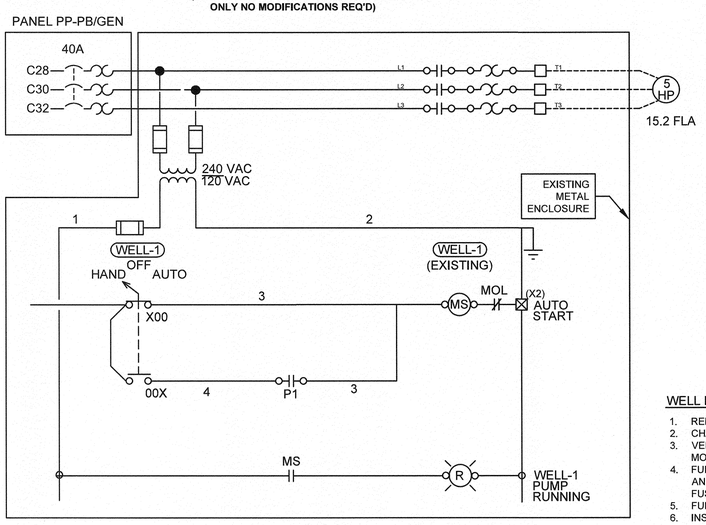

WELL PUMP-1 MOTOR SCHEMATIC

NOT TO SCALE

WELL PUMP-1 SCHEMATIC NOTES:

1. REMOVE ALL WIRING FROM EXISTING MS AND REWIRE AS SHOWN.
2. CHANGE EXISTING MS COIL TO 120V
3. VERIFY EXISTING THERMAL O/L'S ARE PROPERLY SIZED FOR WELL PUMP MOTOR AND INSTALL NEW THERMAL O/L'S IF NECESSARY.
4. FURNISH AND INSTALL 100VA CONTROL TRANSFORMER, 240V PRIMARY AND 120V SECONDARY WITH INTEGRAL PRIMARY AND SECONDARY FUSES.
5. FURNISH AND INSTALL SURGE SUPPRESSION DEVICE AS SHOWN
6. INSTALL H-O-A SELECTOR SWITCH AND PILOT LITE IN FACE OF EXISTING METAL ENCLOSURE.
7. REMOVE CONTROL WIRES AND CAP FROM 'P1' TO EXISTING WELL #1 MOTOR CONTROLLER AND REWIRE 'P1' AS SHOWN

ARC FLASH AND SHOCK HAZARD
APPROPRIATE PPE AND TOOLS REQUIRED WHEN WORKING ON THIS EQUIPMENT

AVAILABLE FAULT CURRENT:

INSTALLATION DATE:

ARC FLASH WARNING SIGN DETAIL

*PLACED ON FRONT OF ALL ELECTRICAL EQUIPMENT

STATE OF MISSOURI
MICHAEL L. PARSON, GOVERNOR

STATE OF MISSOURI DOMINIC D THOMPSON NUMBER PE-2008019610 GRADUATE ENGINEER PROFESSIONAL ENGINEER

DOMINIC D THOMPSON
MO# PE-2008019610

ESTABLISHED 1988 — AN EMPLOYEE OWNED COMPANY
SMITH&CO. ENGINEERS
901 VINE STREET; P.O. BOX 72
POPLAR BLUFF, MISSOURI 63902
(573) 785-9621 FAX: (573) 785-2651 WWW.SHSMITHCO.COM
CIVIL ENGINEERING • SURVEYING • ENVIRONMENTAL & GEOTECHNICAL SERVICES • MATERIAL TESTING

OFFICE OF ADMINISTRATION
DIVISION OF FACILITIES MANAGEMENT, DESIGN AND CONSTRUCTION

DEPARTMENT OF SOCIAL SERVICES
DIVISION OF YOUTH SERVICES

PROJECT TITLE
W.E. SEARS YOUTH CENTER WATER AND WASTEWATER SYSTEMS UPGRADE

W.E. SEARS YOUTH CENTER
POPLAR BLUFF, MO

PROJECT # H1610-01
SITE # 5701
FACILITY # 5701-04
5701-05

REVISION:
DATE:
REVISION:
DATE:
REVISION:
DATE:
ISSUE DATE: 6/21/2019

CAD DWG FILE: P160201
DRAWN BY: DKH
CHECKED BY: DDT
DESIGNED BY: DDT

SHEET TITLE:
WATER SYSTEM ELECTRICAL DETAILS

SHEET NUMBER:
E-101

14 OF 15 SHEETS
JUNE, 2019

P:\P160201 WE Sears Youth Center WW Upgrade Study\Eng\Drawings\P160201.dwg
6/27/2019 1:31 PM

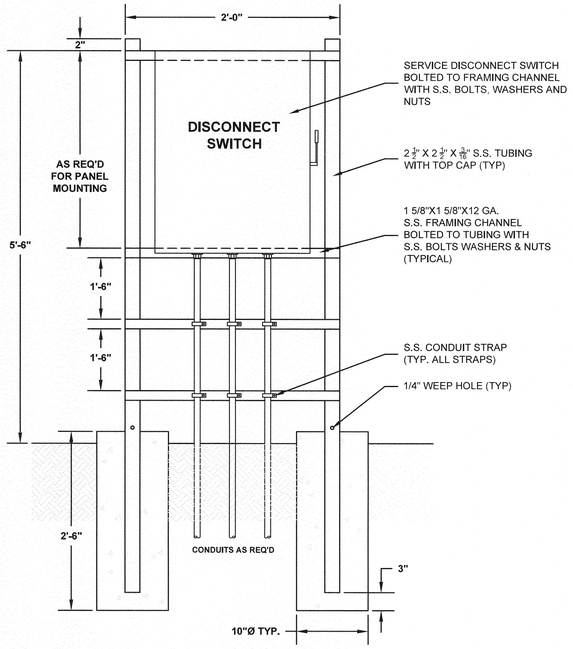

LIFT STATION CONTROL PANEL AND DISCONNECT SWITCH DETAIL

N.T.S

NOTE: SEE ELECTRICAL SERVICE RISER, DISTRIBUTION, AND GROUNDING DIAGRAM FOR CONDUIT AND WIRE SIZES (THIS SHEET)

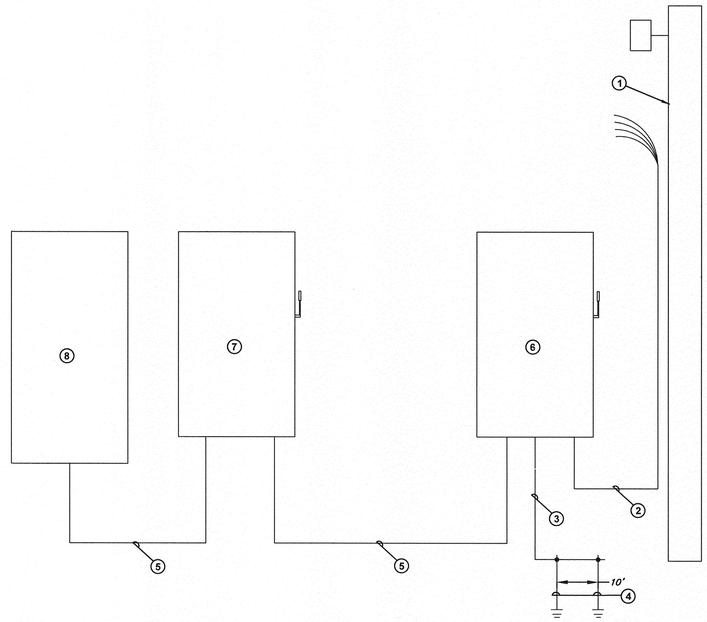

ELECTRICAL SERVICE RISER, DISTRIBUITION, AND GROUNDING DIAGRAM (277/480V/3 PHASE/4 WIRE)

N.T.S

KEYED NOTES - RISER DIAGRAM

1. NEW POWER POLE, TRANSFORMER AND POLE BY POWER COMPANY, COORDINATE ELECTRICAL SERVICE INSTALLATION WITH POWER COMPANY.
2. 4-#2 THWN CONDUCTORS IN 2" CONDUIT, EXTEND CONDUIT AND WIRING 10' UP POWER POLE, EXTEND CONDUCTORS 20' FROM END OF CONDUIT. PROVIDE 10' OF CONDUIT FOR POWER COMPANY INSTALLATION.
3. #6 SOLID BARE COPPER GEC IN 3/4" CONDUIT
4. 3/4" X 8' LISTED COPPER CLAD DRIVEN GROUND RODS
5. 3- #2 THWN CONDUCTORS AND 1-#6 AWG EGC IN 2" CONDUIT
6. 100A/480V/3P/HEAVY DUTY SERVICE DISCONNECT SWITCH NEMA 4X ENCLOSURE WITH COMBINATION NEUTRAL AND EGC BUS BONDED TO ENCLOSURE, PROVIDE 100A TIME DELAY FUSES. AVAILABLE FAULT CURRENT: 2900 A
7. 100A/480V/3P/ NF HEAVY DUTY DISCONNECT SWITCH, NEMA 4X ENCLOSURE WITH EGC BUS BONDED TO ENCLOSURE. AVAILABLE FAULT CURRENT: 1700 A
8. LIFT STATION CONTROL PANEL

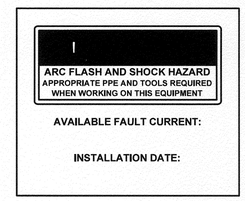

ARC FLASH WARNING SIGN DETAIL

**PLACED ON FRONT OF ALL ELECTRICAL EQUIPMENT*

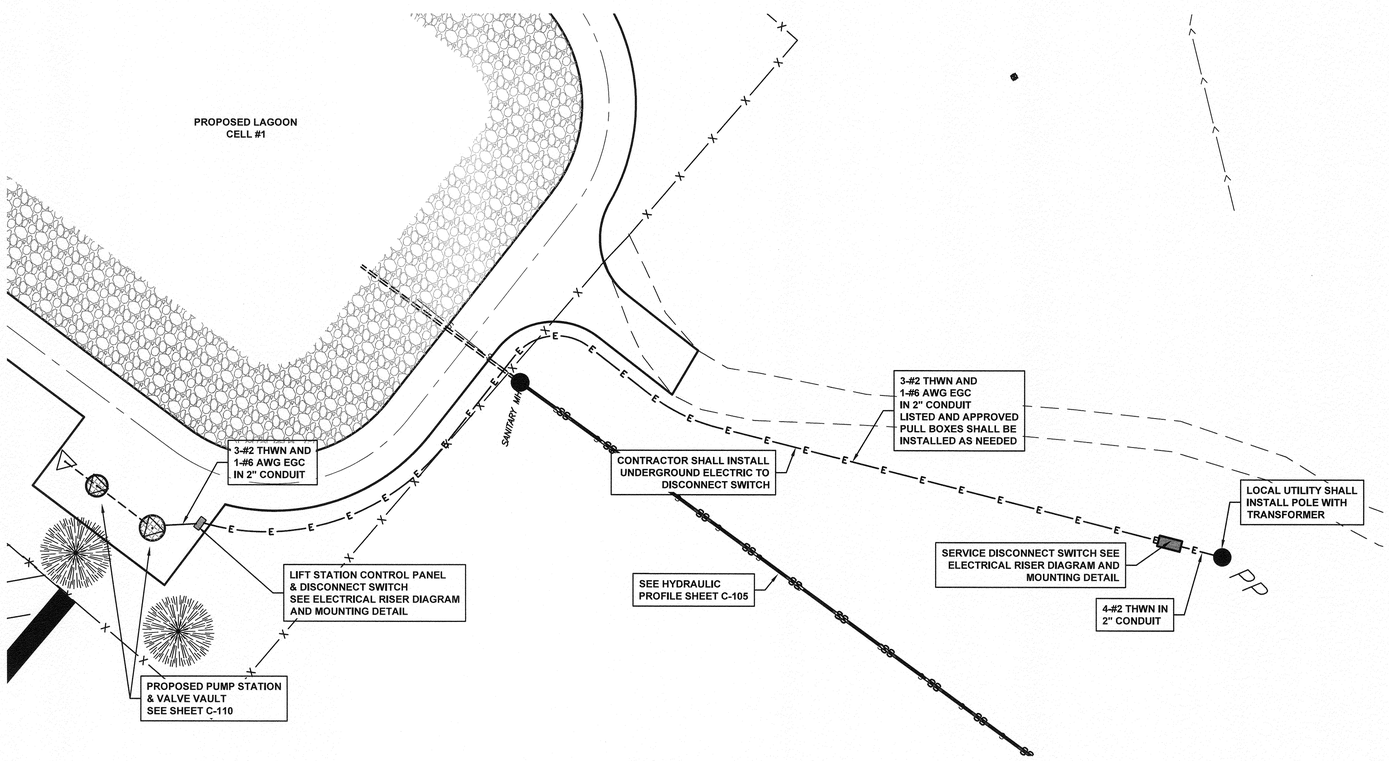

ELECTRICAL SITE PLAN

N.T.S

ELECTRIC GENERAL NOTES:

1. ALL ELECTRICAL WORK SHALL BE IN ACCORDANCE WITH THE LATEST EDITION OF THE NATIONAL ELECTRICAL CODE (NEC).
2. ALL GROUNDING AND BONDING SHALL BE IN ACCORDANCE WITH ARTICLE 250 OF NEC.
3. ALL DISCONNECT SWITCHES, JUNCTION BOXES, AND METAL SUPPORT STRUCTURES SHALL BE GROUNDED AND BONDED IN ACCORDANCE WITH NEC REQUIREMENTS.
4. COORDINATE ELECTRICAL SERVICE INSTALLATION WITH LOCAL POWER COMPANY.
5. ALL PANELBOARDS, BREAKERS, DISCONNECT SWITCHES, AND FUSES SHALL HAVE MINIMUM SHORT CIRCUIT CURRENT RATING AS REQUIRED BY THE LATEST EDITION OF THE NATIONAL ELECTRICAL CODE. THE ELECTRICAL CONTRACTOR SHALL VERIFY SERVICE TRANSFORMERS KVA AND IMPEDIANCE RATING WITH LOCAL POWER COMPANY, AND INSTALL ALL OVERCURRENT PROTECTIVE DEVICES, PANELBOARDS, AND DISCONNECT SWITCHES TO MEET MINIMUM SHORT CIRCUIT CURRENT RATING REQUIREMENTS.
6. ALL WIRE SHALL BE TYPE THWN IN CONDUIT WITH EQUIPMENT GROUND WIRE, UNLESS NOTED OTHERWISE. CONDUCTORS SHALL BE INCREASED IN SIZE WHERE NECESSARY TO ALLOW FOR VOLTAGE DROP.
7. VERIFY EXACT EQUIPMENT POWER REQUIREMENTS OF MECHANICAL AND SPECIAL EQUIPMENT WITH RESPECTIVE CONTRACTOR/SUPPLIER PRIOR TO INSTALLING REQUIRED FUSES, DISCONNECTS, AND CIRCUITS, AND INSTALL ACCORDINGLY.
8. ALL UNDERGROUND CONDUITS SHALL BE PVC SCHEDULE 40 UNLESS NOTED OTHERWISE. BURIED AT A MINIMUM DEPTH OF 18" IN OPEN AREAS AND 24" BELOW ROADS, DRIVEWAYS, AND PARKING LOTS. A MAGNETIC WARNING RIBBON SHALL BE PLACED 12" ABOVE TOP OF CONDUIT. ALL DISTURBED ROADWAYS, DRIVEWAYS, AND PARKING LOTS SHALL BE RESTORED TO ORIGINAL CONDITION.
9. ALL CONDUIT ABOVE GROUND SHALL BE RIGID PVC SCHEDULE 80, WITH PVC SCHEDULE 80 FITTINGS , CONDUITS ABOVE GROUND SHALL BE PAINTED WITH TWO COATS OF WHITE, WATER BASED, OUTDOOR LATEX PAINT.
10. ALL OUTSIDE CONDUITS TERMINATING IN PULL BOXES, JUNCTION BOXES, DISCONNECT SWITCHES, PANEL DOORS, AND CONTROL PANELS SHALL BE CONNECTED TO ENCLOSURE WITH WATERTIGHT FITTING AND SEALED WITH APPROVED CONDUIT SEALER.
11. CONTRACTOR SHALL FURNISH 3 1/2"X2" (MIN. SIZE) ARC FLASH WARNING LABEL ON FACE OF ALL SWITCHBOARDS, PANELBOARDS, DISCONNECT SWITCHES, METER SOCKET ENCLOSED, AND MOTOR CONTROL CENTERS AS REQUIRED BY NEC.

STATE OF MISSOURI
MICHAEL L. PARSON,
GOVERNOR

STATE OF MISSOURI DOMINIC D THOMPSON NUMBER PE-2008019610 PROFESSIONAL ENGINEER

DOMINIC D THOMPSON
MO# PE-2008019610

ESTABLISHED 1968
SMITH&CO. ENGINEERS
AN EMPLOYEE OWNED COMPANY
901 VINE STREET; P.O. BOX 72
POPLAR BLUFF, MISSOURI 63902
(573) 785-9621 FAX: (573) 785-2851 WWW.SHSMITHCO.COM
CIVIL ENGINEERING • SURVEYING •
ENVIRONMENTAL & GEOTECHNICAL SERVICES • MATERIAL TESTING

OFFICE OF ADMINISTRATION
DIVISION OF FACILITIES MANAGEMENT,
DESIGN AND CONSTRUCTION

DEPARTMENT OF SOCIAL SERVICES
DIVISION OF YOUTH SERVICES

PROJECT TITLE
W.E. SEARS YOUTH CENTER WATER AND WASTEWATER SYSTEMS UPGRADE

W.E. SEARS YOUTH CENTER
POPLAR BLUFF, MO

PROJECT # H1610-01
SITE # 5701
FACILITY # 5701-04
5701-05

REVISION:
DATE:
REVISION:
DATE:
REVISION:
DATE:
ISSUE DATE: 6 /21/2019

CAD DWG FILE: P160201
DRAWN BY: DKH
CHECKED BY: DDT
DESIGNED BY: DDT

SHEET TITLE:
SANITARY SEWER ELECTRICAL DETAILS

SHEET NUMBER:
E-102

15 OF 15 SHEETS
JUNE, 2019

P:\P160201 WE Sears Youth Center WW Upgrade Study\Eng\Drawings\P160201.dwg
6/21/2019 1:31 PM