COOLING TOWER REPLACEMENT
ST. JOSEPH
STATE OFFICE BUILDING
St. Joseph, Missouri

sys-tek

MEP:
SYS-TEK
255 BLUE PKY, SUITE 101
LEE'S SUMMIT, MO 64063
T: 816.229-9009
MISSOURI LICENSEE NO 001440

OWNER: STATE OF MISSOURI
MICHAEL L. PARSON,
GOVERNOR

PROJECT MANAGEMENT: OFFICE OF ADMINISTRATION
DIVISION OF FACILITIES MANAGEMENT,
DESIGN AND CONSTRUCTION

DESIGNER: sys-tek

PROJECT NUMBER: O1919-01

SITE NUMBER: 1011
ASSET NUMBER: 3101011001

SHEET NUMBER:
G-001

09/09/19

GENERAL

- NOTE DESIGNATION – DEMOLITION (ALL)
- NOTE DESIGNATION – MECHANICAL NEW WORK
- NOTE DESIGNATION – ELECTRICAL NEW WORK
- NOTE DESIGNATION – PIPING/PLUMBING NEW WORK
- REVISION FROM ORIGINAL DOCUMENT
- EQUIPMENT / LOCATION &/OR NUMBER — EQUIPMENT TAG DESIGNATION
- DRAWING NUMBER / SHEET NUMBER — SECTION CUT DESIGNATION
- DRAWING NUMBER / SHEET NUMBER — RE: 3/M2 — REFERENCE DESIGNATION
- CONNECT TO EXISTING

DUCTWORK

SYMBOLS

- EXISTING DUCTWORK
- DUCTWORK TO BE REMOVED
- NEW DUCTWORK SIZE AS INDICATED
- 90° ELBOW DOWN
- 90° ELBOW UP
- SOUND ATTENUATOR, SIZE AS INDICATED
- FLEXIBLE CONNECTION
- LINED DUCTWORK
- FLEXIBLE DUCTWORK
- RECTANGULAR ECCENTRIC DUCT TRANSITION
- RECTANGULAR CONCENTRIC DUCT TRANSITION
- SQUARE TO ROUND DUCT TRANSITION
- SUPPLY AIR
- RETURN AIR
- TURNING VANES
- SUPPLY DIFFUSER
- RETURN GRILL
- CD — CONTROL DAMPER
- BD — BACKDRAFT DAMPER
- FD — FIRE DAMPER
- FS — COMBINATION FIRE/SMOKE DAMPER
- MVD — MANUAL VOLUME DAMPER
- M — MOTOR OPERATED DAMPER
- DEVICE
- WALL MOUNTED DEVICE
- S — DUCT MOUNTED SMOKE DETECTOR
- AD — ACCESS DOOR, SIZE AS INDICATED
- DEVICE TYPE / INLET SIZE / FLOW — SUPPLY/EXHAUST AIR DEVICE DESIGNATION
- DEVICE TYPE / DEVICE SIZE — RETURN AIR DEVICE DESIGNATION
- T — THERMOSTAT

ABBREVIATIONS

A.F.F.	ABOVE FINISHED FLOOR
AHU	AIR HANDLING UNIT
B.O.D.	BOTTOM OF DUCT
℄	CENTER LINE
CFM	CUBIC FEET PER MINUTE
CD	CEILING DIFFUSER
DP	DIFFERENTIAL PRESSURE
RG	RETURN GRILLE

PIPING/PLUMBING

PLUMBING

CW	COLD WATER PIPING
ICW	INDUSTRIAL COLD WATER
IW	INDIRECT WASTE OR IRRIGATION WATER
NPW	NON-POTABLE WATER
HW	HOT WATER PIPING
HWC	HOT WATER CIRCULATING PIPING
SFT	SOFT WATER
SW	STORM WATER
TWS	TEMPERED WATER SUPPLY
TWR	TEMPERED WATER RETURN
VAC	VACUUM
V	VENT
W	WASTE

BUILDING SYSTEMS

CA	COMPRESSED AIR PIPING
CHWS	CHILLED WATER SUPPLY PIPING
CHWR	CHILLED WATER RETURN PIPING
CWFT	CONDENSER WATER FROM TOWER
CWTT	CONDENSER WATER TO TOWER
CD	CONDENSATE DRAIN PIPING
D	DRAIN
FOS	FUEL OIL SUPPLY
FOR	FUEL OIL RETURN
HPWS	HEAT PUMP WATER SUPPLY
HPWR	HEAT PUMP WATER RETURN
HPS	HIGH PRESSURE STEAM
HPC	HIGH PRESSURE CONDENSATE
HHWS	HEATING HOT WATER SUPPLY
HHWR	HEATING HOT WATER RETURN
HPS	HIGH PRESSURE STEAM
HPC	HIGH PRESSURE CONDENSATE
LPS	LOW PRESSURE STEAM
LPC	LOW PRESSURE CONDENSATE
MPS	MEDIUM PRESSURE STEAM
MPC	MEDIUM PRESSURE CONDENSATE
NG	NATURAL GAS
PC	PUMPED CONDENSATE
REF	REFRIGERANT

PROCESS

AC	ACETYLENE
AW	ACID WASTE
AR	ARGON
CIPS	CLEAN IN PLACE SUPPLY PIPING
CIPR	CLEAN IN PLACE RETURN PIPING
CS	CLEAN STEAM PIPING
DI	DE-IONIZED WATER
DS	DISTILLED WATER
GN	GASEOUS NITROGEN
HE	HELIUM
HY	HYDROGEN
LN	LIQUID NITROGEN
NG	NATURAL GAS
NO	NITROUS OXIDE
PCA	PROCESS COMPRESSED AIR
P	PROPANE

VALVES

- ANGLE VALVE
- BALL VALVE
- BALANCING VALVE
- BUTTERFLY VALVE
- CHECK VALVE
- CONTROL VALVE (TWO-WAY, PNEUMATIC)
- CONTROL VALVE (THREE-WAY, PNEUMATIC)
- GAS COCK
- GATE VALVE
- GLOBE VALVE
- MOTORIZED CONTROL VALVE (TWO-WAY)
- MOTORIZED CONTROL VALVE (THREE-WAY)
- PLUG VALVE
- PRESSURE REDUCING BACKFLOW VALVE
- PRESSURE REDUCING VALVE
- PRESSURE RELIEF VALVE
- SOLENOID VALVE
- TRIPLE DUTY VALVE

FITTINGS & ACCESSORIES

- AV / MV — AIR VENT (AUTOMATIC/MANUAL)
- BLIND FLANGE
- CAP
- C.O. — CLEAN OUT (FLOOR/WALL)
- CONCENTRIC REDUCER
- ECCENTRIC REDUCER
- ELBOW 45°
- ELBOW 90°
- ELBOW 90° UP
- ELBOW 90° DOWN
- EXISTING PIPING TO REMAIN
- FLEXIBLE CONNECTOR
- FD — FLOOR DRAIN
- HB — HOSE BIBB
- NEW PIPING
- PIPE ANCHOR
- PIPE GUIDE/SLEEVE
- PIPING TO BE REMOVED
- PRESSURE GAUGE
- PT — PRESSURE/TEMPERATURE WELL (PETES PLUG)
- PUMP (IN-LINE)
- PUMP (FOR P&ID/FLOW DIAGRAM)
- STRAINER
- STRAINER WITH BLOW DOWN VALVE
- TEE
- TEE, OUTLET DOWN
- TEE, OUTLET UP
- THERMOMETER
- UNION
- VALVE IN RISER

FIRE DETECTION/PROTECTION

FP	FIRE PROTECTION PIPING
	FIRE SPRINKLER HEAD
F	FIRE ALARM BELL
H	HALON ALARM BELL
F	FIRE ALARM PULL STATION
F	FIRE PHONE JACK
	SMOKE DETECTOR
S ION	SMOKE DETECTOR – IONIZATION TYPE
S P	SMOKE DETECTOR – PHOTOMETRIC TYPE
	FIRE HORN/STROBE COMBINATION
15/75	CANDELA NUMBER DESIGNATION (TYP. FOR ALL STROBES)
PDFP	PRE-ACTION DRY-PIPE FIRE PROTECTION
H	HALON OR FM200 ALARM BELL
	HEAT DETECTOR
F	FIRE ALARM HORN
	CALL STATION (AFEA)
H	HALON OR FM200 AUDIO/VISUAL ALARM
F	FIRE ALARM LIGHT
H	HALON OR FM200 STROBE
H	HALON OR FM200 TANK
WM	WATER MIST TANK

ELECTRICAL

POWER

- HOMERUN TO PANELBOARD. NUMBER OF ARROWS INDICATES NUMBER OF CIRCUITS.
- CONDUIT EXPOSED OR IN CEILING CONSTRUCTION.
- #12 THHN WIRE IN CONDUIT UNLESS NOTED OTHERWISE. SIZE PER LATEST N.E.C.
- "J" HOOK RACEWAY MADE FROM 6" ADJUSTABLE PIPE HANGERS (B-LINE MOD. BJ3690 OR EQUAL) SUPPORTED FROM STRUCTURE BY 5/8" ALL THREAD.
- GROUND WIRE IN CONDUIT.
- DISCONNECT SWITCH – UN-FUSED TYPE
- MOTOR STARTER
- FUSED DISCONNECT
- COMBINATION DISCONNECT SWITCH AND MOTOR STARTER.
- DUPLEX GROUNDING TYPE RECEPTACLE OUTLET – RATED 20-AMP.
- DUPLEX GROUNDING TYPE RECEPTACLE OUTLET – ON EMERGENCY POWER
- DOUBLE DUPLEX GROUNDING TYPE RECEPTACLE OUTLET
- WP — DUPLEX GROUNDING TYPE RECEPTACLE OUTLET WITH WEATHERPROOF COVER.
- GFCI — DUPLEX GROUND FAULT INTERRUPTER CIRCUIT TYPE RECEPTACLE OUTLET
- SIMPLEX 125-V., 2-POLE, 3-WIRE RECEPTACLE OUTLET – WALL OR FLOOR MOUNTED
- XP — SAME AS ABOVE – EXPLOSION PROOF
- 30 — SIMPLEX 208-V., 3-POLE, 4-WIRE RECEPTACLE OUTLET
- XP — SAME AS ABOVE – EXPLOSION PROOF
- SIMPLEX 480-V., 3-POLE, 4-WIRE RECEPTACLE OUTLET
- XP — SAME AS ABOVE – EXPLOSION PROOF
- J — JUNCTION BOX
- J — 12"x18" QUAZITE JUNCTION BOX
- B — OUTLET BOX WITH BLANK COVER PLATE
- C — CLOCK HANGER OUTLET
- C — CONTACTOR
- T — TRANSFORMER
- MOTOR
- 120/208V PANELBOARD
- 277/480V PANELBOARD
- PT P — POKE THROUGH DEVICE FOR POWER
- PT P D — POKE THROUGH DEVICE FOR POWER AND DATA
- PT D — POKE THROUGH DEVICE FOR DATA ONLY
- DUPLEX GROUNDING TYPE RECEPTACLE OUTLET, 15-AMP. TWIST-LOCK NEMA L5-15R ON TOP, AND NEMA 5-15R ON BOTTOM
- 30A — SIMPLEX 208/120-V., 3-POLE, 4-WIRE, RECEPTACLE OUTLET, SURFACE MOUNT TO FLOOR IN CAST BOX
- SIMPLEX 208-V., 20-AMP., 3-POLE, 4-WIRE RECEPTACLE OUTLET
- WP — WEATHER PROOF
- GFCI — GROUND FAULT INTERRUPTER
- XP — EXPLOSION PROOF
- E — EMERGENCY STOP SWITCH
- DEVICE MOUNTED 6" ABOVE ABOVE COUNTER UNLESS NOTED OTHERWISE
- FLOOR BOX WITH OUTLET INSTALLED FLUSH WITH FLOOR

SECURITY

- CR — CARD READER
- DM — DOOR MONITOR
- ML — MAGNETIC LOCK
- MOTION SENSOR

LIGHTING

- A — 24"x48" FLUORESCENT LIGHTING FIXTURE, 'A' INDICATES DESIGNATION ON SCHEDULE
- SAME AS ABOVE – CONNECTION TO NIGHT LIGHT CIRCUIT (EMERGENCY POWER)
- A — 12"x48" FLUORESCENT LIGHTING FIXTURE, 'A' INDICATES DESIGNATION ON SCHEDULE
- SAME AS ABOVE – CONNECTION TO NIGHT LIGHT CIRCUIT (EMERGENCY POWER)
- 6"x48" TEARDROP FLUORESCENT LIGHTING FIXTURE (PROVIDED BY OTHERS)
- OR — RECESSED LIGHT FIXTURE
- GROUND MOUNTED FLOOD
- GROUND MOUNTED WALL WASHER
- CEILING MOUNTED EXIT LIGHT (EMERGENCY POWER)
- WALL MOUNTED EXIT LIGHT (EMERGENCY POWER)
- OR — WALL MOUNTED FIXTURE
- OR — POINT SOURCE SURFACE MOUNTED
- OR — ACCENT WITH DIRECTIONAL ARROW
- OR — PENDANT FIXTURE, CHAIN OR STEM MOUNTED
- RECESSED ACCENT OR WALL WASHER
- BOLLARD TYPE
- OR — POLE MOUNTED WITH ARM
- OR — POLE MOUNTED ON TOP
- OR — LUMINARE PROVIDING EMERGENCY ILLUMINATION
- EMERGENCY LIGHTS
- S — SINGLE-POLE, SINGLE-THROW WALL SWITCH
- S_2 — TWO-POLE, SINGLE-THROW WALL SWITCH
- S_3 — THREE-WAY WALL SWITCH
- S_4 — FOUR-WAY WALL SWITCH
- S_D — 1500 W, WALL MOUNTED, INCANDESCENT DIMMER SWITCH
- S_{D3} — THREE WAY, 1000 W DIMMER SWITCH (DIMMING AT ALL LOCATIONS SHOWN).
- PENDANT CABLE SUPPORT
- PC — PHOTO CELL

COMMUNICATION

- WALL MOUNTED TELEPHONE OUTLET. TELEPHONE OUTLET FURNISHED AND INSTALLED BY OWNER. FOR WALL INSTALLATION, PROVIDE AND INSTALL A FLUSH DEVICE BOX, AND PULLSTRING IN WALL STUD SPACE TO ABOVE CEILING. MOUNT DEVICE BOX CENTERLINE AT ELEVATION NOTED ON THE PLANS.
- TRIPLE DATA DEVICE OUTLET. (3) DATA DEVICES FURNISHED AND INSTALLED BY OWNER. FOR WALL INSTALLATION, PROVIDE AND INSTALL A FLUSH DEVICE BOX, AND PULLSTRING IN WALL STUD SPACE TO ABOVE CEILING. MOUNT DEVICE BOX CENTERLINE AT 17" A.F.F. UNLESS OTHERWISE NOTED.
- DATA JACK
- DEVICE MOUNTED 6" ABOVE COUNTER UNLESS NOTED OTHERWISE

MISCELLANEOUS

- AIR TERMINAL
- C — INTERCOM
- LIGHTNING PROTECTION GROUNDING ELECTRODE
- S — LOUDSPEAKER – CEILING MOUNTED
- S — LOUDSPEAKER – WALL MOUNTED
- B — SIGNALING BELL

CONTROLS

EQUIPMENT & CONTROL DEVICE SYMBOLS

- #14 AWG (UNLESS OTHERWISE NOTED)
- #18 TWSTED SHIELDED PAIR
- #18 TWSTED SHIELDED PAIR
- "xx" "PANEL DESIGNATION" (TOP) / "xx" "POSITION IN PANEL" (BOTTOM)
- TEMPERATURE SENSOR
- HUMIDITY SENSOR
- CONTROL PANEL
- NORMALLY OPEN CONTACTS
- NORMALLY CLOSED CONTACTS
- ??? — CONTROL RELAY
- TB-## — TERMINAL BLOCK
- ? — PRESSURE SENSOR

CONTROL ABBREVIATIONS

ACT	DAMPER/VALVE ACTUATOR
AD	AUTOMATIC DAMPER
AFS	AIR FLOW STATION
AI	ANALOG INPUT
AO	ANALOG OUTPUT
CS	CURRENT SWITCH
CY	CONTROL RELAY
DI	DIGITAL INPUT
DO	DIGITAL OUTPUT
E.C.	ELECTRICAL CONTRACTOR
FF	FIRST FLOOR
FRZ	FREEZE STAT
GND	GROUND
HE	HUMIDITY SENSOR
HIC	HAND INDICATING CONTROLLER
HOA	HAND/OFF/AUTO SWTCH
HT	HUMIDITY TRANSMITTER
HY	HAND RELAY
HYD	HYDROGEN TRANSMITTER/SENSOR
LD	LEAK DETECTORS
LL	LOWER LEVEL
LS	LEVEL SWITCH
M.C.	MECHANICAL CONTRACTOR
N.C.	NORMALLY CLOSED
N.O.	NORMALLY OPEN
OT	OUTPUT TRANSDUCERS
PdS	DIFFERENTIAL PRESSURE SWITCH
POT	POTENTIOMETER
PT	PRESSURE TRANSMITTER
R	RELAY
SD	SMOKE DETECTOR BY OTHERS
SDY	SMOKE DETECTOR RELAY BY OTHERS
SMKP	SMOKE PURGE PANEL
SS	SELECTOR SWITCH
SY	SPEED RELAY
TB	TERMINAL BLOCK
T.C.	TEMPERATURE CONTROLS
T.C.C.	TEMPERATURE CONTROLS CONTRACTOR
TDY	TIME DELAY RELAY
TE	TEMPERATURE SENSOR
TSLL	TEMPERATURE SWITCH LOW LIMIT
TSP	TWISTED SHIELDED PAIR
TT	TEMPERATURE TRANSMITTER
TY	TEMPERATURE RELAY (TRANSDUCER)
UL	UPPER LEVEL
VAV	VARIABLE AIR VOLUME
VSD	VARIABLE SPEED DRIVE
XFMR	TRANSFORMER

XX-## — PART NUMBER / PART NAME

RE:1E2 — REFERENCE DESIGNATION — SHEET NUMBER — DETAIL/PLAN NUMBER

General Instrument or Function Symbols

	PRIMARY LOCATION NORMALLY ACCESSIBLE TO OPERATOR *	FIELD MOUNTED	AUXILIARY LOCATION NORMALLY ACCESSIBLE TO OPERATOR *
DISCRETE INSTRUMENTS			
SHARED DISPLAY SHARED CONTROL			
COMPUTER FUNCTION			
PROGRAMMABLE LOGIC CONTROL			

* NORMALLY INACCESSIBLE OR BEHIND THE PANEL DEVICES OR FUNCTIONS ARE DEPICTED BY USING THE SAME SYMBOL WITH DASHED HORIZONTAL LINES.

- INSTRUMENT SUPPLY OR CONNECTION TO PROCESS
- UNDEFINED SIGNAL
- PNEUMATIC SIGNAL
- ELECTRIC SIGNAL
- ELECTRIC SIGNAL
- PNEUMATIC BINARY SIGNAL
- ELECTRIC BINARY SIGNAL
- INTERNAL SYSTEM LINK
- MECHANICAL LINK

NOTE: THIS IS A STANDARD SYS-TEK MECHANICAL, ELECTRICAL, AND PLUMBING LEGEND. ALL SYMBOLS SHOWN MAY NOT BE RELATED TO THIS PARTICULAR PROJECT.

STATE OF MISSOURI
MICHAEL L. PARSON,
GOVERNOR

9/9/19
STATE OF MISSOURI
TRAVIS R. SHORT
NUMBER
PE-2013031861
PROFESSIONAL ENGINEER

sys-tek

MEP:
SYS-TEK
2801 NW 7 HWY
BLUE SPRINGS, MO 64014
T: 816.229-9009

OFFICE OF ADMINISTRATION
DIVISION OF FACILITIES MANAGEMENT,
DESIGN AND CONSTRUCTION

REPLACE COOLING TOWER

ST. JOSEPH
STATE OFFICE BUILDING

525 JULES ST.
ST. JOSEPH, MO 64501

PROJECT # O1919-01
SITE # 1011
ASSET # 3101011001

REVISION:
DATE:
REVISION:
DATE:
REVISION:
DATE:
ISSUE DATE: 09/09/2019

CAD DWG FILE: G-002
DRAWN BY: sys-tek
CHECKED BY: sys-tek
DESIGNED BY: sys-tek

SHEET TITLE:
SYMBOLS LEGEND

SHEET NUMBER:
G-002

SHEET 2 OF 7
DATE: 09/09/19

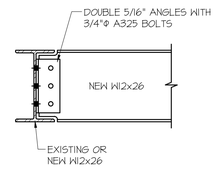

CONNECTION DETAIL

SCALE: 1" = 1'-0"

GENERAL NOTES:

1. THE STEEL FRAMING FOR EXISTING WALKING PLATFORMS OR PIPING SUPPORTS ARE NOT SHOWN ON THIS DRAWING. MODIFICATIONS MAY NEED TO BE MADE FOR NEW WALKING PLATFORMS AND PIPING SUPPORTS AROUND THE NEW UNIT.

2. MECHANICAL CONTRACTOR SHALL REVIEW ALL DIMENSIONS OF STEEL LOCATIONS TO VERIFY THAT THE STEEL WILL MATCH UP WITH THE NEW UNIT AND NOT INTERFERE WITH ANY DUCTWORK, PIPING, ETC.

3. MECHANICAL CONTRACTOR SHALL FIELD DRILL ANY HOLES IN THE BEAMS AS REQUIRED FOR ANCHORAGE OF THE COOLING TOWER TO THE STRUCTURE.

4. THE EXISTING STRUCTURAL STEEL SHALL BE EXAMINED FOR RUST AND MILL SCALE. REMOVE LOOSE RUST AND MILL SCALE BY MECHANICAL MEANS.

5. THE EXISTING AND NEW STEEL SUPPORT STRUCTURE SHALL BE PAINTED WITH A CORROSION-INHIBITING PAINT COMPLYING WITH STEEL STRUCTURAL PAINTING COUNCIL (SSPC).

6. EXAMINE ALL SURFACES TO BE COATED AND REPORT IN WRITING TO THE ENGINEER ANY CONDITIONS THAT WOULD ADVERSELY AFFECT THE APPEARANCE OR PERFORMANCE OF THE COATING SYSTEMS AND WHICH CANNOT BE PUT INTO AN ACCEPTABLE CONDITION BY THE PREPARATORY WORK.

STRUCTURAL STEEL NOTES

1. ALL STRUCTURAL STEEL WORK SHALL CONFORM TO THE REQUIREMENTS OF AISC "SPECIFICATIONS FOR DESIGN, FABRICATION, AND ERECTION OF STRUCTURAL STEEL FOR BUILDINGS"; AISC "CODE OF STANDARD PRACTICE FOR STEEL BUILDINGS AND BRIDGES"; AISC "SPECIFICATIONS FOR STRUCTURAL JOINTS USING ASTM A325 OR A490 BOLTS".

2. STRUCTURAL STEEL MATERIAL SHALL COMPLY WITH:
A. WIDE FLANGE SHAPES - ASTM A992.
B. PLATES, ANGLES AND CHANNELS - ASTM A36.
C. HIGH-STRENGTH THREADED FASTENERS - ASTM A325, HEAVY HEXAGON NUTS, HARDENED WASHERS.
D. STEEL PRIMER PAINT - FABRICATOR'S STANDARD RUST-INHIBITING PRIMER.

3. SHOP PAINT STRUCTURAL STEEL. PROVIDE ONE-COAT SHOP APPLIED PAINT SYSTEM COMPLYING WITH STEEL STRUCTURAL PAINTING COUNCIL (SSPC).

4. IMMEDIATELY AFTER ERECTION, CLEAN FIELD WELDS, BOLTED CONNECTIONS AND ABRADED AREAS AND APPLY PAINT TO EXPOSED AREAS WITH SAME MATERIALS AS USED FOR SHOP PAINTING.

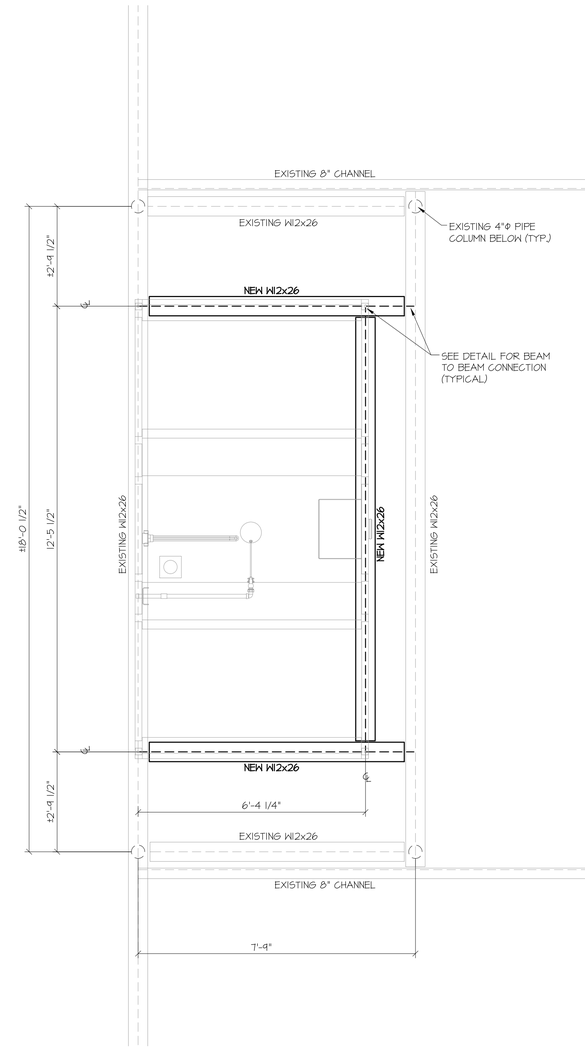

COOLING TOWER SUPPORT FRAMING

SCALE: 1/2" = 1'-0"

STATE OF MISSOURI
MICHAEL L. PARSON,
GOVERNOR

STATE OF MISSOURI
JOSEPH G. LAMPEN
NUMBER
E-24760
REGISTERED PROFESSIONAL ENGINEER

9-9-19

LAMPEN ENGINEERING, INC.
P.O. Box 1054
Blue Springs, MO 64013
(816) 220-0246

JOSEPH G. LAMPEN, P.E.
MO. CERT. OF AUTHORITY NO 00431664

OFFICE OF ADMINISTRATI
DIVISION OF FACILITIES
MANAGEMENT,
DESIGN AND CONSTRUCTI

REPLACE COOLING TOWER

ST. JOSEPH
STATE OFFICE BUILDING

525 JULES ST.
ST. JOSEPH, MO 64501

PROJECT # O1919-01
SITE # 1011
ASSET # 3101011001

REVISION:
DATE:
REVISION:
DATE:
REVISION:
DATE:
ISSUE DATE: 09/09/2019

CAD DWG FILE: S-100
DRAWN BY: JGL
CHECKED BY: JGL
DESIGNED BY: JGL

SHEET TITLE:

RTU FRAMING

SHEET NUMBER:

S-100

SHEET 3 OF 7
DATE: 09/09/2019

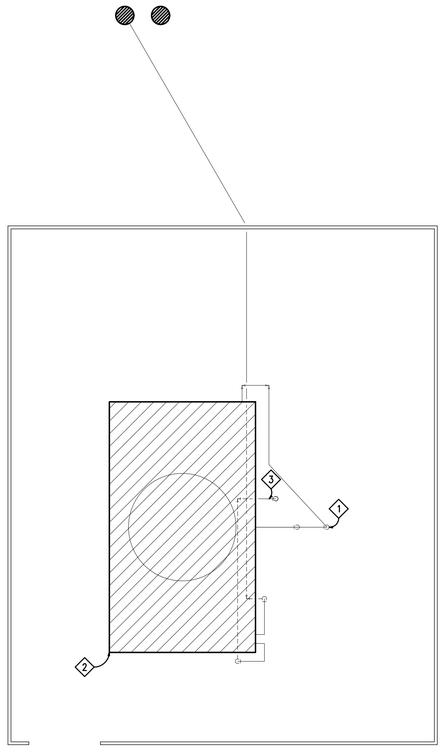

1 ROOF PLAN MECHANICAL - DEOMO WORK

SCALE: 1/4"=1'-0"

NORTH

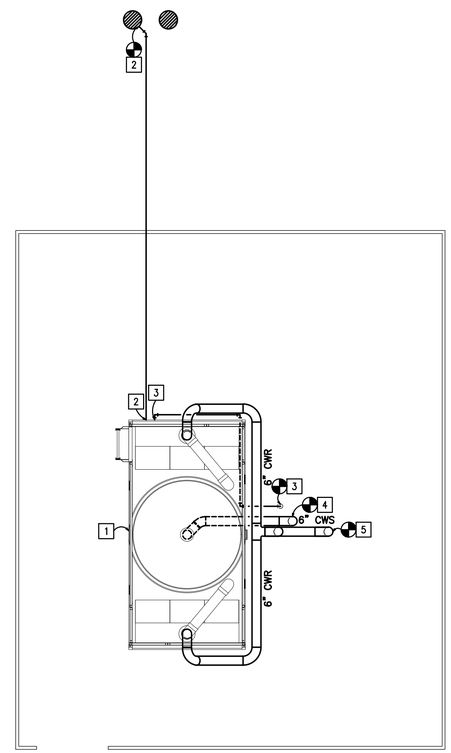

1 ROOF PLAN MECHANICAL - NEW WORK

SCALE: 1/4"=1'-0"

NORTH

DEMOLITION NOTES

1. DEMO PIPE AND COOLING TOWER BYPASS CONTROL VALVE. DO NOT DEMO PAST CONTROL VALVE. REFERENCE NEW WORK FOR CONNECTION OF PIPING TO NEW BYPASS CONTROL VALVE AND EXISTING CONDENSER WATER RISER.
2. REMOVE COOLING TOWER IN ITS ENTIRETY INCLUDING ALL CONDENSER WATER PIPING, DRAIN PIPING, & CONTROLS.
3. DEMO MAKEUP WATER LINE TO POINT OF CLOSEST REUSE.

NEW WORK NOTES

1. PROVIDE AND INSTALL NEW COOLING TOWER AT LOCATION SHOWN. REFER TO STRUCTURAL DRAWINGS FOR STRUCTURAL MODIFICATIONS.
2. ROUTE 2" PIPING FROM COOLING TOWER BASIN OVERFLOW CONNECTION POINT TO EXISTING WASTE WATER ROOF DRAIN.
3. ROUTE 1" MAKEUP WATER PIPING FROM EXISTING MAKEUP WATER LINE TO MAKEUP WATER CONNECTION ON COOLING TOWER.
4. ROUTE NEW 6" CONDENSER WATER PIPE FROM EXISTING CONNECTION POINT TO NEW COOLING TOWER BASIN.
5. ROUTE NEW 6" CONDENSER WATER PIPE FROM EXISTING CONNECTION POINT TO NEW COOLING TOWER HOT WATER BASIN CONNECTIONS.

STATE OF MISSOURI
MICHAEL L. PARSON,
GOVERNOR

9/9/19
STATE OF MISSOURI
TRAVIS R. SHORT
NUMBER
PE-2013031861
PROFESSIONAL ENGINEER

sys-tek

MEP:
SYS-TEK
2801 NW 7 HWY
BLUE SPRINGS, MO 64014
T: 816.229-9009

OFFICE OF ADMINISTRATION
DIVISION OF FACILITIES MANAGEMENT,
DESIGN AND CONSTRUCTION

REPLACE COOLING TOWER

ST. JOSEPH
STATE OFFICE BUILDING

525 JULES ST.
ST. JOSEPH, MO 64501

PROJECT # O1919-01
SITE # 1011
ASSET # 3101011001

REVISION:
DATE:
REVISION:
DATE:
REVISION:
DATE:
ISSUE DATE: 09/09/2019

CAD DWG FILE: M-101
DRAWN BY: sys-tek
CHECKED BY: sys-tek
DESIGNED BY: sys-tek

SHEET TITLE:

ROOF PLAN MECHANICAL

SHEET NUMBER:

M-101

SHEET 4 OF 7
DATE: 09/09/19

COOLING TOWER SCHEDULE

DESIGNATION	MANUFACTURER	MODEL No.	EWT DEG. F	LWT DEG. F	AMBIENT (WB DEG. F)	FAN				GPM	OPER. WEIGHT	BASIN HEATER	NOTES
						No.	No. MTRS	HP	V/PH/HZ				
CT-1	MARLEY	NC8401KAN	95	85	78	1	1	5	460/3/60	390	8,492 lbs	7.5 Kw	1

NOTES

1. COORDINATE WITH ELECTRICAL CONTRACTOR FOR INSTALLATION AND CONNECTION OF BASIN HEATER CONTROL SYSTEM

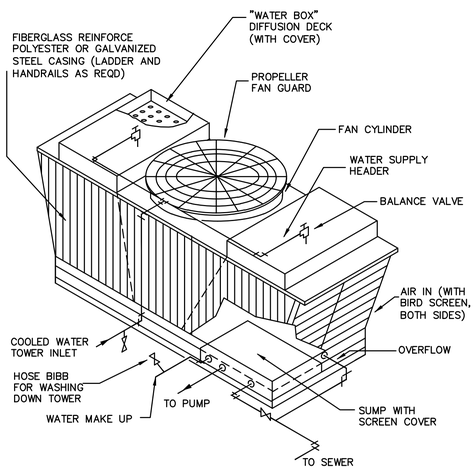

1 COOLING TOWER INSTALLATION DETAIL

SCALE: N.T.S.

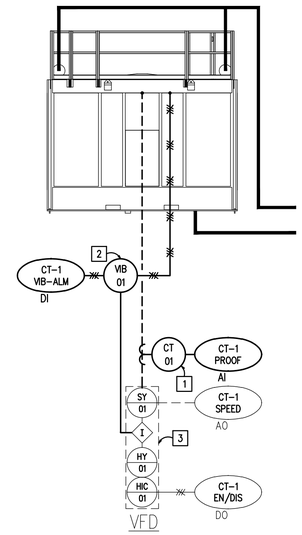

2 CONDENSER WATER P&ID - NEW WORK

SCALE: N.T.S.

NEW WORK NOTES

1. NEW CURRENT TRANSDUCER FOR FAN/PUMP PROOF OF OPERATION PROVIDED, INSTALLED AND WIRED BY THE CONTROLS CONTRACTOR.
2. CONNECT NEW VIBRATION SWITCH INTO EXISTING VFD SAFETY CIRCUIT. MONITOR POINT FOR ALARM PURPOSES. NOTE THIS IS TO BE A HARDWIRE SAFETY.
3. EXISTING CONTROLS FOR VFD TO BE REUSED.

STATE OF MISSOURI
MICHAEL L. PARSON,
GOVERNOR

9/9/19
STATE OF MISSOURI
TRAVIS R. SHORT
NUMBER
PE-2013031861
PROFESSIONAL ENGINEER

sys-tek

MEP:
SYS-TEK
2801 NW 7 HWY
BLUE SPRINGS, MO 64014
T: 816.229-9009

OFFICE OF ADMINISTRATION
DIVISION OF FACILITIES MANAGEMENT,
DESIGN AND CONSTRUCTION

REPLACE COOLING TOWER

ST. JOSEPH
STATE OFFICE BUILDING

525 JULES ST.
ST. JOSEPH, MO 64501

PROJECT # O1919-01
SITE # 1011
ASSET # 3101011001

REVISION:
DATE:
REVISION:
DATE:
REVISION:
DATE:
ISSUE DATE: 09/09/2019

CAD DWG FILE: M-101
DRAWN BY: sys-tek
CHECKED BY: sys-tek
DESIGNED BY: sys-tek

SHEET TITLE:

MECH DETAILS, P&ID, & SCHEDULES

SHEET NUMBER:

M-601

SHEET 5 OF 7
DATE: 09/09/19

ST. JOSEPH STATE OFFICE BUILDING – DESCRIPTION OF WORK

A. GENERAL:
   1) COOLING TOWER CONTROL SEQUENCES DESCRIBED HEREIN INDICATE THE MANNER AND CHRONOLOGICAL SEQUENCE IN WHICH, AND METHODS BY WHICH, AUTOMATIC, TEMPERATURE CONTROLS FUNCTION.
   2) EXISTING CONTROLS SHALL BE MODIFIED AS REQUIRED TO INCORPORATE THE ADDITIONAL POINTS REQUIRED PER DRAWING M-601. REUSE OF EXISTING CONTROL INPUTS/OUTPUTS IS ACCEPTABLE.
   3) THE BAS CONTROL SYSTEM INSTALLED UNDER THIS PROJECT SHALL BE PROGRAMMED TO PROVIDE THE INTENT OF THE SEQUENCES DESCRIBED HEREIN. THE BAS SHALL BE FURNISHED AND INSTALLED COMPLETE AND SHALL BE PROPERLY ADJUSTED AND PROGRAMMED TO PERFORM ALL SEQUENCES, FUNCTIONS, AND STATUS INDICATIONS FOR ALL EQUIPMENT AND SYSTEMS AS HEREIN SPECIFIED AND AS INDICATED ON DRAWINGS AND AS REQUIRED BY EXISTING CONDITIONS.

ST. JOSEPH STATE OFFICE BUILDING – COOLING TOWER (CT-1)

A. GENERAL:
   1) COOLING TOWER CONTROLS SHALL REUSE EXISTING CONTROLS ASSOCIATED WITH THE EXISTING COOLING TOWER FAN VFD.

B. SEQUENCES – UNIT SPECIFIC OPERATION
   1) THE COOLING TOWERS SHALL BE ENABLED EITHER WHEN MANUALLY COMMANDED BY AN OPERATOR OR BASED UPON THE CHILLED WATER PLANT BEING ENABLED.
   2) WHEN THE COOLING TOWERS ARE CALLED TO RUN THE FAN VFD SHALL MODULATE TO MAINTAIN THE CONDENSER WATER FROM TOWER SETPOINT.
   3) THE COOLING TOWER CONDENSER WATER FROM TOWER SETPOINT (SUPPLY TO CHILLER) SHALL RESET BASED UPON THE MEASURED OUTSIDE AIR WET BULB TEMPERATURE.
      i. RESET BETWEEN 70°F (ADJ.) TO 85°F (ADJ.) BASED UPON OUTSIDE AIR WET BULB TEMPERATURES OF 60°F (ADJ.) TO 75°F (ADJ.). FOR EXAMPLE, AT 60°F THE CONDENSER WATER FROM TOWER SETPOINT WILL BE 70°F WHILE AT 75°F THE SETPOINT WILL BE 85°F.
   4) THE COOLING TOWER VFD SHALL MODULATE SPEED TO MAINTAIN THE CONDENSER WATER FROM TOWER (SUPPLY TO CHILLER) TEMPERATURE AT SETPOINT. WHEN THE FAN HAS MODULATED TO THE MINIMUM VFD SPEED OF 30% (ADJ.) AND THE CONDENSER WATER FROM TOWER TEMPERATURE DROPS BELOW THE SETPOINT BY 3°F (ADJ.) THEN DISABLE THE FAN VFD.

C. ALARMS
   1) THE FOLLOWING ARE SOFTWARE GENERATED ALARMS:
      i. COOLING TOWER FAN ALARM – IF THE MONITORED FAN VFD ENABLE POINT IS TRUE AND THE MONITORED VFD AMPS ARE NOT GREATER THAN 1-AMP (ADJ.) FOR A PERIOD OF 30-SECONDS (ADJ.) THEN THE FAN VFD SHALL GO INTO ALARM. WHEN IN ALARM THE VFD COMMAND SHALL REMAIN ENABLED.
         1. IF AT ANYTIME AFTER ALARM INITIATION THE VFD AMPS ARE MEASURED GREATER THAN 1-AMP (ADJ.) FOR A PERIOD GREATER THAN 30-SECONDS THEN THE ALARM STATE SHALL CLEAR. ONCE CLEARED THE PUMP SHALL OPERATE UNDER AUTOMATIC CONTROL.
   2) HIGH CONDENSER WATER FROM TOWER TEMPERATURE (SUPPLY TO CHILLER) – IF THE CONDENSER WATER FROM TOWER TEMPERATURE RISES 5°F ABOVE THE CURRENT CHILLED WATER SUPPLY TEMPERATURE SETPOINT GENERATE AN ALARM. AUTOMATICALLY RESET ALARM ONCE THE CONDENSER WATER FROM TOWER TEMPERATURE DROPS TO 3°F ABOVE THE CURRENT CHILLED WATER SUPPLY TEMPERATURE SETPOINT.

STATE OF MISSOURI
MICHAEL L. PARSON,
GOVERNOR

9/9/19
STATE OF MISSOURI
TRAVIS R. SHORT
NUMBER
PE-2013031861
PROFESSIONAL ENGINEER

sys-tek

MEP:
SYS-TEK
2801 NW 7 HWY
BLUE SPRINGS, MO 64014
T: 816.229-9009

OFFICE OF ADMINISTRATION
DIVISION OF FACILITIES MANAGEMENT,
DESIGN AND CONSTRUCTION

REPLACE COOLING TOWER

ST. JOSEPH
STATE OFFICE BUILDING

525 JULES ST.
ST. JOSEPH, MO 64501

PROJECT # O1919-01
SITE # 1011
ASSET # 3101011001

REVISION:
DATE:
REVISION:
DATE:
REVISION:
DATE:
ISSUE DATE: 09/09/2019

CAD DWG FILE: M-801
DRAWN BY: sys-tek
CHECKED BY: sys-tek
DESIGNED BY: sys-tek

SHEET TITLE:
SEQUENCE OF OPERATIONS

SHEET NUMBER:
M-801

SHEET 6 OF 7
DATE: 09/09/19

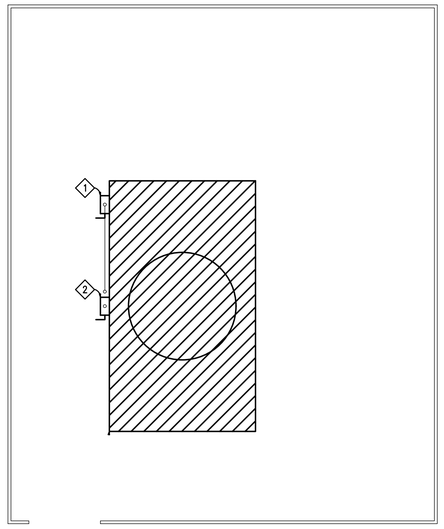

1 ROOF PLAN ELECTRICAL - DEOMO WORK

SCALE: 1/4"=1'-0"

NORTH

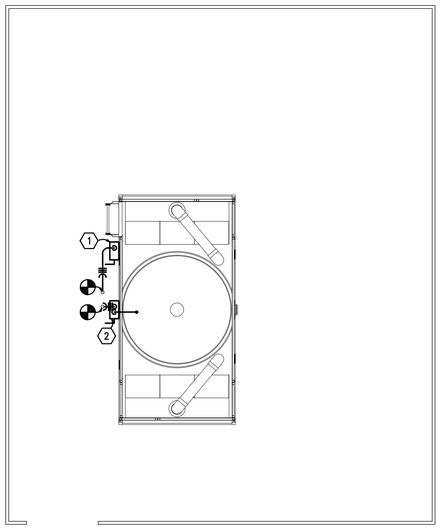

1 ROOF PLAN ELECTRICAL - NEW WORK

SCALE: 1/4"=1'-0"

NORTH

DEMOLITION NOTES

1. DEMO EXISTING ELECTRICAL DISCONNECT FOR BASIN HEATER. DEMO ELECTRICAL CONNECTION TO BASIN HEATER. REUSE WIRE FROM MSB IN THE BASEMENT UP TO DISCONNECT SWITCH FOR NEW WORK.

2. DEMO EXISTING ELECTRICAL DISCONNECT FOR COOLING TOWER FAN. DEMO ELECTRICAL CONNECTION TO COOLING TOWER FAN MOTOR. REUSE WIRE FROM EXISTING VFD FOR NEW WORK.

NEW WORK NOTES

1. PROVIDE NEW 20-AMP DISCONNECT SWITCH FOR NEW BASIN HEATER. CONNECT EXISTING WIRE RETAINED DURING DEMO WORK TO NEW DISCONNECT SWITCH. ROUTE NEW RIGID CONDUIT AND WIRE TO BASIN HEATER CONTROLLER CONNECTION. INSTALL BASIN HEATER CONTROLLER PROVIDED BY MANUFACTURER PER MANUFACTURERS INSTRUCTIONS.

2. PROVIDE NEW 20-AMP DISCONNECT SWITCH FOR NEW COOLING TOWER FAN. ROUTE (3) #12 AWG AND (1) #12 GND IN 3/4" RIGID CONDUIT FROM DISCONNECT TO NEW COOLING TOWER FAN MOTOR. REPROGRAM EXISTING COOLING TOWER VFD LOCATED IN 3RD FLOOR CHASE. CURRENT VFD PROGRAMMING IS FOR 15HP MOTOR, SETTINGS NEED TO BE CHANGED TO FACILITATE THE NEW 5HP MOTOR.

STATE OF MISSOURI
MICHAEL L. PARSON,
GOVERNOR

9/9/19

STATE OF MISSOURI
TRAVIS R. SHORT
NUMBER
PE-2013031861
PROFESSIONAL ENGINEER

sys-tek

MEP:
SYS-TEK
2801 NW 7 HWY
BLUE SPRINGS, MO 64014
T: 816.229-9009

OFFICE OF ADMINISTRATION
DIVISION OF FACILITIES MANAGEMENT,
DESIGN AND CONSTRUCTION

REPLACE COOLING TOWER

ST. JOSEPH
STATE OFFICE BUILDING

525 JULES ST.
ST. JOSEPH, MO 64501

PROJECT # O1919-01
SITE # 1011
ASSET # 3101011001

REVISION:
DATE:
REVISION:
DATE:
REVISION:
DATE:
ISSUE DATE: 09/09/2019

CAD DWG FILE: M-101
DRAWN BY: sys-tek
CHECKED BY: sys-tek
DESIGNED BY: sys-tek

SHEET TITLE:

ROOF PLAN
ELECTRICAL

SHEET NUMBER:

E-101

SHEET 7 OF 7
DATE: 09/09/19