PROJECT MANUAL

TASMG Readiness Center
AVCRAD Facility
Springfield, Missouri

Volume 1 of 4

DESIGNED BY: Olsson
1301 Burlington St,
Kansas City, MO 64116

DATE ISSUED: 2/26/2020

PROJECT NO.: T1809-01

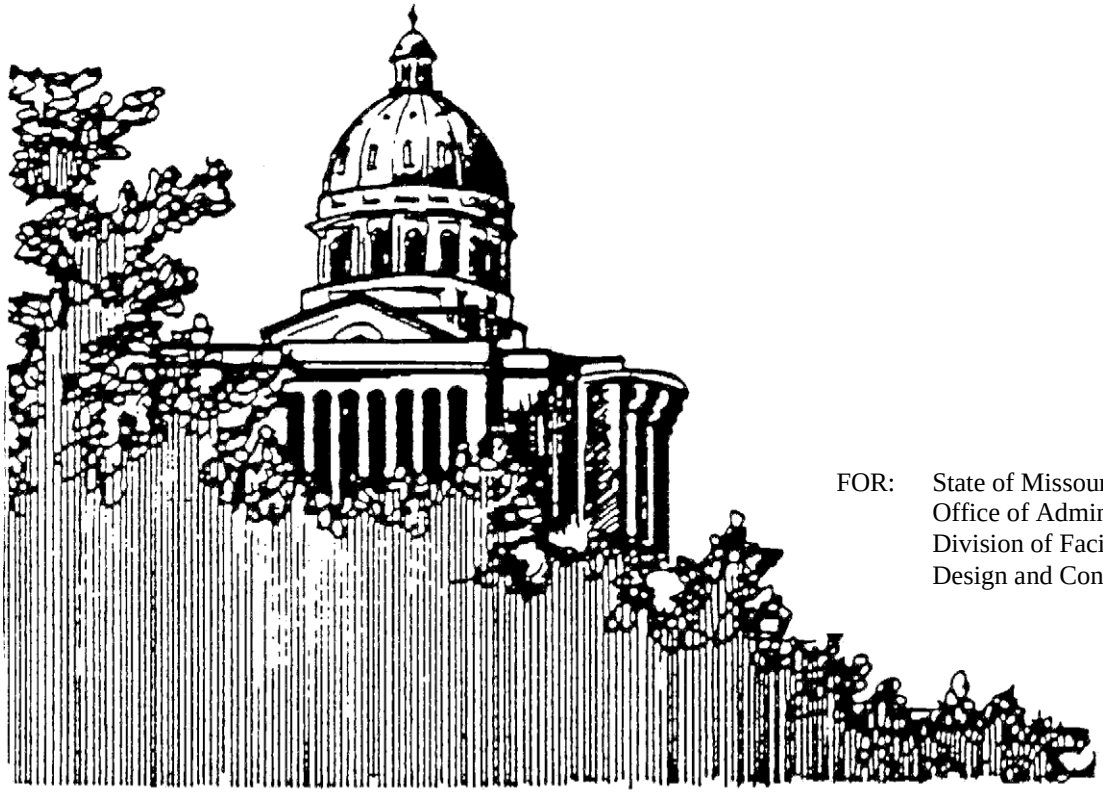

FOR: State of Missouri
Office of Administration
Division of Facilities Management,
Design and Construction

SECTION 000107 - PROFESSIONAL SEALS AND CERTIFICATIONS – MEP, FIRE PROTECTION, STRUCTURAL

PART 1 - GENERAL

1.1 MECHANICAL & ELECTRICAL ENGINEER'S DISCLAIMER OF RESPONSIBILITY

A. I, Michael Sapp, hereby certify that I have coordinated all Plan and Specification Documents. The Plans and Documents authenticated by my Seal are limited to the following:

1) Drawings:
All G-Series Sheets
All A-series sheets

2) Specifications:

Front End Specifications

All / Parts Thereof Division #1 thru Division 5

All Divisions #6 thru #13

I hereby disclaim any responsibility for all other Drawings, Specifications, estimates, reports, or other documents or instruments relating to or intended to be used for any part or parts of the Design and Construction TASMG Readiness Center.

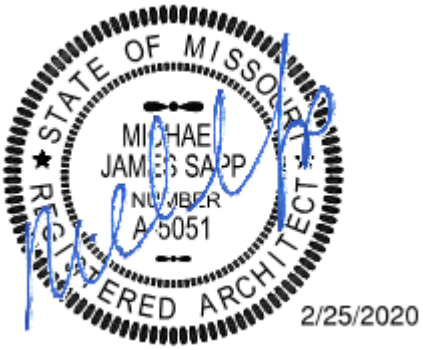

By: Michael J Sapp

SECTION 000107 - PROFESSIONAL SEALS AND CERTIFICATIONS – MEP, FIRE PROTECTION, STRUCTURAL

PART 1 - GENERAL

1.2 STRUCTURAL ENGINEER'S DISCLAIMER OF RESPONSIBILITY

A. I, Chris Philpy, hereby certify that I have coordinated all Plan and Specification Documents. The Plans and Documents authenticated by my Seal are limited to the following:

1) Drawings:
All S-Series Sheets

2) Specifications:

Front End Specifications

All Division #3

All Division #4

All Division #5

I hereby disclaim any responsibility for all other Drawings, Specifications, estimates, reports, or other documents or instruments relating to or intended to be used for any part or parts of the Design and Construction TASMG Readiness Center.

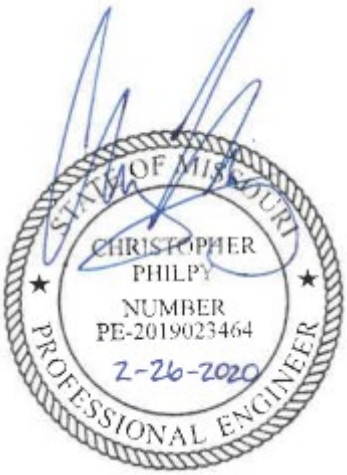

By: Chris Philpy

SECTION 000107 - PROFESSIONAL SEALS AND CERTIFICATIONS – MEP, FIRE PROTECTION, STRUCTURAL

PART 1 - GENERAL

1.1 MECHANICAL & ELECTRICAL ENGINEER'S DISCLAIMER OF RESPONSIBILITY

A. I, Cory Wilson, hereby certify that I have coordinated all Plan and Specification Documents. The Plans and Documents authenticated by my Seal are limited to the following:

1) Drawings:
All ME-Series Sheets
All M-series sheets
All E-series sheets
All P-series sheets
All FP-series sheets

2) Specifications:

Front End Specifications

All Division #21

All Division #22

All Division #23

All Division #26

All Division #28

I hereby disclaim any responsibility for all other Drawings, Specifications, estimates, reports, or other documents or instruments relating to or intended to be used for any part or parts of the Design and Construction TASMG Readiness Center.

By: Cory Wilson

SECTION 000107 - PROFESSIONAL SEALS AND CERTIFICATIONS – CIVIL

PART 1 - GENERAL

1.1 CIVIL ENGINEER'S DISCLAIMER OF RESPONSIBILITY

A. I, Ryan Jeppson, hereby certify that I have coordinated all Plan and Specification Documents. The Plans and Documents authenticated by my Seal are limited to the following:

1) Drawings:
All C-Series Sheets

2) Specifications:

All Division #31

All Division #32 (excluding landscape related)

All Division #33

All Division #34

I hereby disclaim any responsibility for all other Drawings, Specifications, estimates, reports, or other documents or instruments relating to or intended to be used for any part or parts of the Design and Construction TASMG Readiness Center.

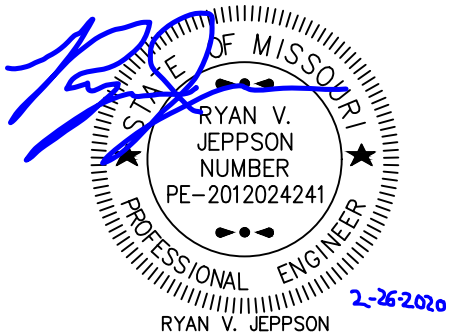

RYAN V. JEPPSON
PROFESSIONAL ENGINEER
MO# PE-2012024241

By: Ryan Jeppson

SECTION 000107 - PROFESSIONAL SEALS AND CERTIFICATIONS – LANDSCAPE PART

1 - GENERAL

1.1 CIVIL ENGINEER'S DISCLAIMER OF RESPONSIBILITY

A. I, Jane Earnhart, hereby certify that I have coordinated all Plan and Specification Documents. The Plans and Documents authenticated by my Seal are limited to the following:

1) Drawings:
All LP-Series Sheets

2) Specifications:

Division #32 (landscape related only)

I hereby disclaim any responsibility for all other Drawings, Specifications, estimates, reports, or other documents or instruments relating to or intended to be used for any part or parts of the Design and Construction TASMG Readiness Center.

By: Jane Earnhart

TABLE OF CONTENTS

SECTION	TITLE	NUMBER OF PAGES
	VOLUME 1	
DIVISION 00 – PROCUREMENT AND CONTRACTING INFORMATION		
000000	**INTRODUCTORY INFORMATION**	
000101	Project Manual Cover	1
000107	Professional Seals and Certifications	5
000110	Table of Contents	5
000115	List of Drawings	5
001116	**INVITATION FOR BID (IFB)** plus Missouri Buys instructions and special notice	3
002113	**INSTRUCTIONS TO BIDDERS (Includes MBE/WBE/SDVE Information)**	8
003132	Geotechnical Data	1
003144	MBE/WBE/SDVE Directory	1
****The following documents may be found on MissouriBUYS at https://missouribuys.mo.gov/****		
004000	**PROCUREMENT FORMS & SUPPLEMENTS**	
004113	Bid Form	*
004336	Proposed Subcontractors Form	*
004337	MBE/WBE/SDVE Compliance Evaluation Form	*
004338	MBE/WBE/SDVE Eligibility Determination Form for Joint Ventures	*
004339	MBE/WBE/SDVE Good Faith Effort (GFE) Determination Forms	*
004340	SDVE Business Form	*
004541	Affidavit of Work Authorization	*
005000	**CONTRACTING FORMS AND SUPPLEMENTS**	
005213	Construction Contract	3
005414	Affidavit for Affirmative Action	1
006113	Performance and Payment Bond	2
006325	Product Substitution Request	2
006519.16	Final Receipt of Payment and Release Form	1
006519.18	MBE/WBE/SDVE Progress Report	1
006519.21	Affidavit of Compliance with Prevailing Wage Law	1
007000	**CONDITIONS OF THE CONTRACT**	
007213	General Conditions	20
007300	Supplementary Conditions	2
007346	Wage Rate	4
DIVISION 01 - GENERAL REQUIREMENTS		
010000	Summary of Work	5
010270	Applications for Payment	4
010350	Modification Procedures	2
010400	Project Coordination	4
010450	Request for Information	1
012100	Allowances	3
	City Utilities Extension Contract for Allowance	3
	City Utilities Cost Memorandum for Allowance	1
	City Utilities Load Sheet	1
012300	Alternates	2
012600	Contract Modification Procedures	2
013100	Coordination	2
013101	Contractor Safety and Special Instructions	5
013200	Construction Progress Documentation	4
013300	Submittal Procedures	10
014000	Quality Control	3
015000	Temporary Facilities and Services	3
016310	Product Substitutions	3
017000	Construction Procedures	12

017400	Warranties and Bonds	3
017419	Construction Waste Management and Disposal	8
017700	Project Close Out	3
017821	Project Record Documents	3
017823	Operation and Maintenance Data	3
018113.14	Sustainable Design Requirements LEEDv4 Bd+C	8
019100	General Commissioning	14

DIVISION 02 - EXISTING CONDITIONS

024119	Selective Demolition	9

DIVISION 03 – CONCRETE

031000	Concrete Forming And Accessories	7
032000	Concrete Reinforcing	4
033000	Cast-In-Place Concrete	23

DIVISION 04 - MASONRY

042000	Unit Masonry	23
047200	Cast Stone Masonry	9

DIVISION 05 - METALS

051200	Structural Steel Framing	9
052100	Steel Joist Framing	5
053100	Steel Decking	6
054000	Cold-Formed Metal Framing	11
055000	Metal Fabrications	12
055113	Metal Pan Stairs	8
057300	Decorative Metal Railings	7

VOLUME 2

DIVISION 06 - WOOD, PLASTICS, AND COMPOSITES

061053	Miscellaneous Rough Carpentry	8
061600	Sheathing	5
064023	Interior Architectural Woodwork	4
064116	Plastic-Laminate-Faced Architectural Cabinets	9

DIVISION 07 - THERMAL AND MOISTURE PROTECTION

071326	Self-Adhering Sheet Waterproofing	8
072100	Thermal Insulation	5
072119	Foamed-In-Place Insulation	3
072726	Fluid-Applied Membrane Air Barriers	9
074113.19	Batten-Seam Metal Roof Panels	13
074213.13	Formed Metal Wall Panels	10
074213.19	Insulated Metal Wall Panels	10
074217	Insulated-Core Metal Wall Backup Panel System	6
074293	Soffit Panels	9
075419	Polyvinyl-Chloride (Pvc) Roofing	15
076200	Sheet Metal Flashing and Trim	13
077100	Roof Specialties	6
077129	Manufactured Roof Expansion Joints	6
077200	Roof Accessories	8
077210	Rooftop Fall Arrest System	5
077253	Snow Guards	5
078413	Penetration Firestopping	6
078443	Joint Firestopping	6
079100	Preformed Joint Seals	4
079200	Joint Sealants	10
079513.13	Interior Expansion Joint Cover Assemblies	4
079513.16	Exterior Expansion Joint Cover Assemblies	6

DIVISION 08 - OPENINGS

081113	Hollow Metal Doors and Frames	8

081416	Flush Wood Doors	7
083113	Access Doors and Frames	4
083313	Coiling Counter Doors	7
083323	Overhead Coiling Doors	9
083459	Vault Doors and Day Gates	5
084113	Aluminum-Framed Entrances And Storefronts	14
084413	Glazed Aluminum Curtain Walls	13
084523	Fiberglass Sandwich Panel Assemblies	8
087100	Door Hardware	28
088000	Glazing	12
089119	Fixed Louvers	7

DIVISION 09 - FINISHES

092216	Non-Structural Metal Framing	8
092900	Gypsum Board Assemblies	11
095113	Accoustical Panel Ceilings	9
096513	Resilient Base and Accessories	7
096519	Resilient Tile Flooring	6
096723	Resinous Flooring	5
096813	Tile Carpeting	7
098436	Sound-Absorbing Ceiling Units	6
099000	Painting	9

DIVISION 10 - SPECIALTIES

101100	Visual Display Units	6
101423	Panel Signage	6
102113.19	Plastic Toilet Compartments	6
102213	Wire Mesh Partitions	8
102226	Folding Partition Panels	5
102800	Toilet, Bath, and Laundry Accessories	6
104413	Fire Protection Cabinets	4
105113	Metal Lockers	8

DIVISION 11 - EQUIPMENT

114000	Food Service Equipment(N.I.C.) – Furnished Under Separate Contract	NIC

DIVISION 12 - FURNISHINGS

122413	Roller Window Shades	7
123661.16	Solid Surfacing Countertops	5
123661.19	Quartz Agglomerate Countertops	5

DIVISION 14 - CONVEYING EQUIPMENT

142123.16	Machine Room-Less Electric Traction Passenger Elevators	10

VOLUME 3

DIVISION 21-28

211300	Fire Supression System	21
220500	Common Work Results for Plumbing	21
220501	Plumbing Project Coordination and Installation	2
220516	Expansion Fittings and Loops for Plumbing	4
220519	Meters and Gauges for Plumbing Piping	4
220523	Plumbing Valves	3
220529	Plumbing Supports, Anchors, and Seals	4
220548	Plumbing Vibration Isolation	6
220553	Plumbing Identification	4
220719	Plumbing Piping Insulation	4
221116	Domestic Water Piping	10
221119	Domestic Water Piping Specialties	7
221124	Domestic Water Pumps	6

221316	Sanitary Waste And Vent Piping	4
221319	Sanitary Waste Piping Specialties	7
221323	Sanitary Waste Interceptors	3
221413	Storm Drainage Piping	5
221423	Storm Drainage Piping Specialties	5
221429	Sump Pumps	4
223100	Water Softeners	8
223500	Domestic Water Heat Exchangers	6
224000	Plumbing Fixtures And Accessories	5
224500	Emergency Plumbing Fixtures	5
230500	Common Work For Results For HVAC	14
230501	Mechanical Project Coordination And Installation	2
230516	Expansion Fittings And Loops For HVAC Piping	4
230519	Meters and Gauges for HVAC Piping	5
230523	HVAC Valves	3
230529	Hangers and Supports for HVAC Equipment	5
230548	HVAC Vibration Isolation	4
230553	HVAC Identification	4
230593	Testing, Adjusting, and Balancing for HVAC	3
230713	HVAC Duct Insulation	3
230719	HVAC Piping Insulation	5
230923	Direct Digital Control System for HVAC	27
230993	Sequences Of Operation	8
231123	Natural Gas Piping	8
232113	Hydronic Piping	7
232116	Hydronic Specialties	7
232300	Refrigerant Piping	8
232315	Refrigeration Specialties	5
233113	HVAC Ductwork	9
233300	Air Duct Accessories	17
233416	Centrifugal Exhaust Fans	5
233600	Air Terminal Devices	5
233713	HVAC Diffusers, Registers and Grilles	8
233723	HVAC Gravity Ventilators	4
233813	Kitchen Exhaust Systems	10
237313	Modular Indoor Central Station Air Handling Units	8
238220	Fan-Coil Units and Unit Ventilators	8
260500	Common Work Results for Electrical	15
260501	Temporary Electrical Facilities	3
260519	Low-Voltage Electrical Conductors and Cables	5
260526	Grounding and Bonding for Electrical Systems	7
260529	Hangers and Supports for Electrical Systems	4
260533	Raceway and Boxes for Electrical Systems	5
260553	Identification for Electrical Systems	6
260913	Electrical Power Monitoring and Control	10
260923	Lighting Control Devices	7
260926	Network Lighting Controls	15
260936	Modular Dimming Controls	6
262200	Low-Voltage Transformers	5
262213	Low-Voltage Distribution Panelboards	6
262300	Low Voltage Switchgear	21

262413	Integrated Power Center	7
262416	Panelboards	8
262726	Wiring Devices	7
262813	Fuses	3
262816	Enclosed Switches and Circuit Breakers	5
262923	Variable Frequency Drives	9
263213	Engine Generators	16
263600	Transfer Switches	9
264313	Surge Protection Devices (SPD)	9
265100	Interior Lighting	4
265300	Emergency Lighting Fixtures	6
265600	Exterior Lighting	9
270500	Common Work Results for Communications	2
271100	Communications Equipment Room Fittings	2
271500	Communications Horizontal Cabling	4
272500	Cable Tray	5
283100	Fire Alarm System	34

DIVISION 31 – EARTHWORK

311000	Clearing and Grubbing	2
312000	Excavation and Embankment	6
312319	Dewatering	1
312500	Erosion and Sediment Control	6

DIVISION 32 – EXTERIOR IMPROVEMENTS

321123	Crushed Aggregate Base Course	4
321216	Hot-Mix Asphalt Paving	1
321313	Cement Concrete Paving	1
321723	Pavement Markings (Parking Lot)	1
329200	Topsoiling	2
329210	Turf Sodding	6
329220	Turf Seeding	9
329300	Trees Shrubs and Groundcover	11

DIVISION 33 – UTILITIES

331123	Natural Gas Distribution	1
334000	Pipe for Storm Drains and Culverts	4

DIVISION 34 – TRANSPORTATION

344116	Traffic Control	2

VOLUME 4

APPENDIX

Appendix A	2018 Palmerton and Parrish Geotechnical Engineering Report	85
Appendix B	City of Springfield Public Works General Conditions and Technical Specifications	248
Appendix C	City Utilities Technical Specifications	75

END OF TABLE OF CONTENTS

SECTION 000115 – LIST OF DRAWINGS

PART 1 - GENERAL

1.1 RELATED DOCUMENTS

A. Drawings and general provisions of the Contract including General and Supplementary Conditions, Bid Form, and other Division 1 Specification Sections apply to this Section.

1.2 SUMMARY

A. This Section provides a comprehensive list of the drawings that comprise the Bid Documents for this project.

PART 2 - PRODUCTS (NOT APPLICABLE)

PART 3 - EXECUTION

3.1 LIST OF DRAWINGS

A. The following list of drawings is a part of the Bid Documents:

	SHEET #	TITLE	DATE (ALL)
GENERAL			02/26/2020
1.	G000	COVER SHEET	
2.	G001	DRAWING INDEX	
3.	G100	SYMBOLS & ABBREVIATIONS	
4.	G101	STANDARD ACCESSIBLITY DETAILS	
5.	G200	OVERALL CODE PLAN & CODE SUMMARY	
SITE			02/26/2020
6.	C100	EXISTING CONDITIONS AND DEMOLITION	
7.	C200	GENERAL LAYOUT PLAN	
8.	C201	SITE PLAN	
9.	C300	GRADING PLAN	
10.	C400	UTILITY PLAN	
11.	C500	STORM WATER DRAINAGE PLAN	
12.	C501	STORM WATER PLAN AND PROFILE	
13.	C600	CONSTRUCTION ACCESS PLAN	
14.	C700	EROSION CONTROL PLAN	
15.	C701	EROSION CONTROL DETAILS	
16.	C800	SITE DETAILS	
17.	C801	SITE DETAILS	

18.	CU-1	GAS MAIN EXTENSION AND SERVICE	
19.	EX-1	LEED BOUNDARY EXHIBIT	
20.	LP100	LANDSCAPE PLAN	
ARCHITECTURAL			02/26/2020
21.	A001	PARTITION TYPES	
22.	A100	OVERALL FIRST FLOOR PLAN	
23.	A101	OVERALL SECOND FLOOR PLAN	
24.	A110	FIRST FLOOR PLAN - AREA A	
25.	A111	FIRST FLOOR PLAN - AREA B	
26.	A120	SECOND FLOOR PLAN	
27.	A130	ROOF PLAN	
28.	A150	ENLARGED RESTROOM PLANS	
29.	A151	ENLARGED KITCHEN PLAN	
30.	A200	ELEVATIONS	
31.	A250	BUILDING SECTIONS	
32.	A251	BUILDING SECTIONS	
33.	A300	WALL SECTIONS	
34.	A301	WALL SECTIONS	
35.	A302	WALL SECTIONS	
36.	A303	WALL SECTIONS	
37.	A304	WALL SECTIONS & DETAILS	
38.	A305	WALL SECTIONS & DETAILS	
39.	A306	DETAILS	
40.	A400	DOOR SCHEDULE & ELEVATIONS	
41.	A401	STOREFRONT ELEVATIONS	
42.	A402	HEAD, JAMB & SILL DETAILS	
43.	A403	HEAD, JAMB & SILL DETAILS	
44.	A404	HEAD, JAMB & SILL DETAILS	
45.	A450	INTERIOR ELEVATIONS	
46.	A500	VERTICAL CIRCULATION	
47.	A501	VERTICAL CIRCULATION - ELEVATOR	
48.	A502	VERT CIRCULATION DETAILS	
49.	A610	FIRST FLOOR RCP - AREA A	
50.	A611	FIRST FLOOR RCP - AREA B	
51.	A620	SECOND FLOOR RCP	

52.	A700	CASEWORK ELEVATIONS	
53.	A701	CASEWORK SECTIONS	
54.	A810	FIRST FLOOR INTERIOR FINISH PLAN - AREA A	
55.	A811	FIRST FLOOR INTERIOR FINISH PLAN - AREA B	
56.	A820	SECOND FLOOR INTERIOR FINISH PLAN	
57.	A910	FIRST FLOOR SIGNAGE AND FURNITURE PLAN AREA A	
58.	A911	FIRST FLOOR SIGNAGE AND FURNITURE PLAN AREA B	
59.	A920	SECOND FLOOR SIGNAGE AND FURNITURE PLAN AREA A	
STRUCTURAL			02/26/2020
60.	S001	STRUCTURAL GENERAL NOTES	
61.	S002	SPECIAL INSPECTION SCHEDULES	
62.	S100	OVERALL FOUNDATION PLAN	
63.	S101	AREA A - FOUNDATION PLAN	
64.	S102	AREA B - FOUNDATION PLAN	
65.	S201	AREA A - SECOND FLOOR FRAMING PLAN	
66.	S300	OVERALL ROOF FRAMING PLAN	
67.	S301	AREA A - ROOF FRAMING PLAN	
68.	S302	AREA B - ROOF FRAMING PLAN	
69.	S500	FOUNDATION DETAILS	
70.	S501	FOUNDATION DETAILS	
71.	S600	FRAMING DETAILS	
72.	S601	FRAMING DETAILS	
73.	S602	FRAMING DETAILS	
74.	S603	FRAMING DETAILS	
75.	S604	FRAMING DETAILS	
MECHANICAL			02/26/2020
76.	GM100	GENERAL MECHANICAL INFORMATION	
77.	M110	FIRST FLOOR MECHANICAL PLAN - AREA A	
78.	M111	FIRST FLOOR MECHANICAL PLAN - AREA B	
79.	M120	SECOND FLOOR MECHANICAL PLAN	
80.	M130	MECHANICAL ROOF PLAN - AREA A	
81.	M131	MECHANICAL ROOF PLAN - AREA B	
82.	M210	FIRST FLOOR MECHANICAL PIPING PLAN - AREA A	
83.	M211	FIRST FLOOR MECHANICAL PIPING PLAN - AREA B	
84.	M220	SECOND FLOOR PIPING PLAN	

85.	M500	CONTROLS DIAGRAMS	
86.	M501	CONTROLS DIAGRAMS	
87.	M600	MECHANICAL DETAILS	
88.	M601	MECHANICAL DETAILS	
89.	M700	MECHANICAL SCHEDULES	
PLUMBING			02/26/2020
90.	P110	FIRST FLOOR WASTE & VENT PLUMBING PLAN - AREA A	
91.	P111	FIRST FLOOR WASTE & VENT PLUMBING PLAN - AREA B	
92.	P120	SECOND FLOOR WASTE & VENT PLUMBING PLAN	
93.	P210	FIRST FLOOR DOMESTIC WATER PLUMBING PLAN - AREA A	
94.	P211	FIRST FLOOR DOMESTIC WATER PLUMBING PLAN - AREA B	
95.	P220	SECOND FLOOR DOMESTIC PLUMBING PLAN - AREA B	
96.	P400	PLUMBING ENLARGED PLANS	
97.	P500	PLUMBING DIAGRAMS	
98.	P600	PLUMBING DETAILS	
99.	P700	PLUMBING SCHEDULES FIRE PROTECTION	
100.	FA110	FIRE ALARM PLAN FIRST FLOOR AREA A	
101.	FA111	FIRE ALARM PLAN FIRST FLOOR AREA B	
102.	FA120	FIRE ALARM PLAN SECOND FLOOR	
103.	FA200	FIRE ALARM RISER DIAGRAM	
104.	FP110	FIRE PROTECTION PLAN FIRST FLOOR AREA A	
105.	FP111	FIRE PROTECTION PLAN FIRST FLOOR AREA B	
106.	FP120	FIRE PROTECTION PLAN SECOND FLOOR	
ELECTRICAL			02/26/2020
107.	GE100	ELECTRICAL SITE PLAN	
108.	ES100	ELECTRICAL SITE PLAN	
109.	ES101	SITE LIGHTING PHOTOMETRICS PLAN	
110.	E110	FIRST FLOORLIGHTING PLAN - AREA A	
111.	E111	FIRST FLOOR LIGHTING PLAN - AREA B	
112.	E120	SECOND FLOOR LIGHTING PLAN - AREA A	
113.	E210	FIRST FLOOR POWER PLAN - AREA A	
114.	E211	FIRST FLOOR POWER PLAN - AREA B	
115.	E220	SECOND FLOOR POWER PLAN	
116.	E230	ELECTRICAL ROOF PLAN - AREA A	
117.	E231	ELECTRICAL ROOF PLAN AREA B	

118.	E310	FIRST FLOOR SYSTEMS PLAN - AREA A
119.	E311	FIRST FLOOR SYSTEMS PLAN - AREA B
120.	E320	SECOND FLOOR SYSTEMS PLAN
121.	E400	ELECTRICAL ENLARGED PLANS
122.	E401	ELECTRICAL ENLARGED PLANS
123.	E500	ELECTRICAL DIAGRAMS
124.	E501	ELECTRICAL DIAGRAMS
125.	E600	ELECTRICAL DETAILS
126.	E601	ELECTRICAL DETAILS
127.	E602	ELECTRICAL DETAILS
128.	E603	ELECTRICAL DETAILS
129.	E700	ELECTRICAL SCHEDULES
130.	E701	ELECTRICAL SCHEDULES
131.	E702	ELECTRICAL SCHEDULES

END OF SECTION 000115

SECTION 001116 - INVITATION FOR BID

1.0 OWNER:

The State of Missouri
Office of Administration,
Division of Facilities Management, Design and Construction
Jefferson City, Missouri

2.0 PROJECT TITLE AND NUMBER:

TASMG Readiness Center
AVCRAD Facility
Springfield, Missouri
Project No.: T1809-01

3.0 BIDS WILL BE RECEIVED:

A. Until: 1:30 PM, Thursday, May 21, 2020

B. **Only electronic bids on MissouriBUYS shall be accepted: https://missouribuys.mo.gov. Bidder must be registered to bid.**

4.0 DESCRIPTION:

A. Scope: The project includes constructing a new two-story Army Readiness Center, approximately 43,000 SF in size, adjacent to the existing AVCRAD facility. This project will adjoin to the phase 3A project scheduled for completion in summer 2020.

B. Estimate: $8,240,000 to $11,330,000

C. MBE/WBE/SDVE Goals: MBE 10.00%, WBE 10.00%, & SDVE 3.00%. **NOTE: Only MBE/WBE firms certified by a State of Missouri public entity as of the date of bid opening, or SDVE(s) meeting the requirements of Section 34.074, RSMo and 1 CSR 30-5.010, can be used to satisfy the MBE/WBE/SDVE participation goals for this project.**

D. **NOTE: Bidders are provided new Good Faith Effort (GFE) forms on MissouriBUYS.

5.0 PRE-BID MEETING:

A. Place/Time: 10:00 AM, Thursday, April 30, 2020; Corrosion Control Building hangar, 2501 Lester Jones Avenue, Springfield, MO 65803. Attendees shall check in at the facility main gate on Lester Jones Avenue. Concrete sign at the gate reads: "Missouri Army National Guard, 1107th AVCRAD Facility, Springfield, MO." Attendees must have a driver's license or other photo identification with an expiration date. Security personnel at the main gate will give verbal directions of how to get to the Corrosion Control Building. Given the current CDC guidelines limiting gatherings to 10 personnel and 6-foot diameter social distancing requirements, the pre-bid meeting location will be the Corrosion Control building hangar and we plan to use a microphone/speaker if there is a large enough audience. We ask that all attendees adhere to the current CDC guidelines throughout the meeting and site walk-though.

B. Access to State of Missouri property requires presentation of a photo ID by all persons

6.0 HOW TO GET PLANS & SPECIFICATIONS:

A. View Only Electronic bid sets are available at no cost or paper bid sets for a deposit of $200 from American Document Solutions (ADS). MAKE CHECKS PAYABLE TO: American Document Solutions. Mail to: American Document Solutions, 1400 Forum Blvd., Suite 7A, Columbia, Missouri 65203. Phone 573-446-7768, Fax 573-355-5433, https://www.adsplanroom.net. NOTE: Prime contractors will be allowed a maximum of two bid sets at the deposit rate shown above. Other requesters will be allowed only one bid set at this rate. Additional bid sets or parts thereof may be obtained by any bidder at the cost of printing and shipping by request to American Document Solutions at the address shown above. **Bidder must secure at least one bid set to become a planholder.**

B. **Refunds: Return plans and specifications in unmarked condition within 15 working days of bid opening to American Document Solutions, 1400 Forum Blvd., Suite 7A, Columbia, Missouri 65203. Phone 573-446-7768, Fax 573-355-5433. Deposits for plans not returned within 15 working days shall be forfeited.**

C. Information for upcoming bids, including downloadable plans, specifications, Invitation for Bid, bid tabulation, award, addenda, and access to the ADS planholders list, is available on the Division of Facilities Management, Design and Construction's web site: https://oa.mo.gov/facilities/bid-opportunities/bid-listing-electronic-plans.

7.0 POINT OF CONTACT:

A. Designer: Olsson, Cory Wilson, phone # 816-361-1177, cwilson@olsson.com

B. Project Manager: Michael Smith, phone # 573-638-9655, michael.e.smith788.nfg@mail.mil

8.0 GENERAL INFORMATION:

A. The State reserves the right to reject any and all bids and to waive all informalities in bids. No bid may be withdrawn for a period of 20 working days subsequent to the specified bid opening time. The contractor shall pay not less than the prevailing hourly rate of wages for work of a similar character in the locality in which the work is performed, as determined by the Missouri Department of Labor and Industrial Relations and as set out in the detailed plans and specifications.

B. Bid results will be available at https://oa.mo.gov/facilities/bid-opportunities/bid-listing-electronic-plans after it is verified that at least one bid is awardable and affordable.

Very Important MissouriBUYS Instructions to Help Submit a Bid Correctly

A. The bidder shall submit his or her bid and all supporting documentation on MissouriBUYS eProcurement System. No hard copy bids shall be accepted. Go to https://missouribuys.mo.gov and register. The bidder must register before access is granted to the solicitation details and bidding is possible, however, the bidder can review a summary of the project by selecting "Bid Board" and then checking off "Open" under "Status" and "OA-FMDC-Contracts Chapter 8" under "Organization" in the boxes shown on the left margin.

B. Once registered, log in.
1. Under "Solicitation" select "View Current Solicitations." A new screen will open.
2. Under "Filter by Agency" select "OA-FMDC-Contracts Chapter 8."
3. Under "Filter by Opp. No." type in the State Project Number. Select "Submit."
4. Above the dark blue bar, select "Other Active Opportunities."
5. To see the Solicitation Summary, single click the Opp. No. (Project Number) and the summary will open. Single quick click each blue bar to open detailed information.

C. Here are simplified instructions for uploading the bid to MissouriBUYS:
1. Find the solicitation by completing Steps 1 through 4 above.
2. Select the three dots under "Actions." Select "Add New Response."
3. When the Quote box opens, give the response a title and select "OK."
4. The detailed solicitation will open. Select "Check All" for the Original Solicitation Documents, open each document, and select "Accept." If this step is not completed, a bid cannot be uploaded. Scroll to the bottom of the page and select "Add Attachments." If you do not see this command, not all documents have been opened and accepted.
5. The Supplier Attachments box will open. Select "Add Attachment" again.
6. The Upload Documents box will open. Read the instructions for uploading. Disregard the "Confidential" check box.
7. Browse and attach up to 5 files at a time. Scroll to bottom of box and select "Upload." The Supplier Attachments box will open. Repeat Steps 5 through 7 if more than 5 files are to be uploaded.
8. When the Supplier Attachments box opens again and uploading is complete, select "Done." A message should appear that the upload is successful. If it does not, go to the Bidder Response tab and select "Submit."
9. The detailed solicitation will open. At the bottom select "Close."

D. Any time a bidder wants to modify the bid, he or she will have to submit a new one. FMDC will open the last response the bidder submits. The bidder may revise and submit the bid up to the close of the solicitation (bid date and time). Be sure to allow for uploading time so that the bid is successfully uploaded prior to the 1:30 PM deadline; we can only accept the bid if it is uploaded before the deadline.

E. If you want to verify that you are uploading documents correctly, we encourage you to submit a fake bid early. Label the fake bid as such to distinguish it from the real bid. The contracts person you contact will let you know if your "bid" was received successfully. Please contact Kelly Copeland: 573-522-2283, kelly.copeland@oa.mo.gov., or Paul Girouard: 573-751-4797, paul.girouard@oa.mo.gov.

F. If you are experiencing login issues, please contact Web Procure Support (Proactis) at 866-889-8533 anytime from 7:00 AM to 7:00 PM Central Time, Monday through Friday. If you try using a userid or password several times that is incorrect, the system will lock you out. Web Procure Support is the only option to unlock you! If you forget your userid or password, Web Procure Support will provide a temporary userid or password. Also, if it has been a while since your last successful login and you receive an "inactive" message, contact Web Procure (Proactis). If you are having a registration issue, you may contact Cathy Holliday at 573-751-3491 or by email: cathy.holliday@oa.mo.gov.

IMPORTANT INFORMATION REGARDING REQUIREMENT FOR OEO CERTIFICATION

SPECIFICATION CHANGES:

A. SECTION 002113 – INSTRUCTIONS TO BIDDERS: Article 14.0, Section B.1. (bottom of page 6 of 8): Delete: “an MBE or WBE must be certified by the State of Missouri, Office of Equal Opportunity and”.

To allow MBE, WBE, or MBE/WBE contractors, subcontractors, and suppliers to have ample time to register with the Office of Equal Opportunity, this requirement will not take effect until July 1, 2020. Until then, we will continue to accept certifications from the Office of Equal Opportunity and other Missouri certifying agencies.

SECTION 002113 – INSTRUCTIONS TO BIDDERS

1.0 - SPECIAL NOTICE TO BIDDERS

A. If awarded a contract, the Bidder's employees, and the employees of all subcontractors, who perform the work on the project, will be required to undergo a fingerprint background check and obtain a State of Missouri identification badge prior to beginning work on site. The Bidder should review the information regarding this requirement in Section 013513 – Site Security and Health Requirements prior to submitting a bid.

B. The Bidder's prices shall include all city, state, and federal sales, excise, and similar taxes that may lawfully be assessed in connection with the performance of work, and the purchased of materials to be incorporated in the work. THIS PROJECT IS NOT TAX EXEMPT.

2.0 - BID DOCUMENTS

A. The number of sets obtainable by any one (1) party may be limited in accordance with available supply.

B. For the convenience of contractors, sub-contractors and suppliers, copies of construction documents are on file at the office of the Director, Division of Facilities Management, Design and Construction and on the Division's web site - https://oa.mo.gov/facilities/bid-opportunities/bid-listing-electronic-plans.

3.0 - BIDDERS' OBLIGATIONS

A. Bidders must carefully examine the entire site of the work and shall make all reasonable and necessary investigations to inform themselves thoroughly as to the facilities available as well as to all the difficulties involved in the completion of all work in accordance with the specifications and the plans. Bidders are also required to examine all maps, plans and data mentioned in the specifications. No plea of ignorance concerning observable existing conditions or difficulties that may be encountered in the execution of the work under this contract will be accepted as an excuse for any failure or omission on the part of the contractor to fulfill in every detail all of the requirements of the contract, nor accepted as a basis for any claims for extra compensation.

B. Under no circumstances will contractors give their plans and specifications to another contractor. Any bid received from a contractor whose name does not appear on the list of plan holders may be subject to rejection.

4.0 - INTERPRETATIONS

A. No bidder shall be entitled to rely on oral interpretations as to the meaning of the plans and specifications or the acceptability of alternate products, materials, form or type of construction. Every request for interpretation shall be made in writing and submitted with all supporting documents not less than five (5) working days before opening of bids. Every interpretation made to a bidder will be in the form of an addendum and will be sent as promptly as is practicable to all persons to whom plans and specifications have been issued. All such addenda shall become part of the contract documents.

B. Approval for an "acceptable substitution" issued in the form of an addendum as per Paragraph 4A above, and as per Article 3.1 of the General Conditions; ACCEPTABLE SUBSTITUTIONS shall constitute approval for use in the project of the product.

C. An "acceptable substitution" requested after the award of bid shall be approved if proven to the satisfaction of the Owner and the Designer as per Article 3.1, that the product is acceptable in design, strength, durability, usefulness, and convenience for the purpose intended. Approval of the substitution after award is at the sole discretion of the Owner.

D. A request for "Acceptable Substitutions" shall be made on the Section 006325 Substitution Request Form. The request shall be sent directly to the project Designer. A copy of said request should also be mailed to the Owner, Division of Facilities Management, Design and Construction, Post Office Box 809, Jefferson City, Missouri 65102.

5.0 - BIDS AND BIDDING PROCEDURE

A. Bidders shall submit all submission forms and accompanying documents listed in SECTION 004113 – BID FORM, Article 5.0, ATTACHMENTS TO BID by the stated time or their bid will be rejected for being non-responsive.

Depending on the specific project requirements, **the following is a GENERIC list** of all possible bid forms that may be due with bid submittals and times when they may be due. Please check for specific project requirements on the proposal form (Section 004113). ***Not all of the following bid forms may be required to be submitted.***

Bid Submittal – due before stated date and time of bid opening (see IFB):

004113	Bid Form (all pages are always required)
004322	Unit Prices Form
004336	Proposed Subcontractors Form
004337	MBE/WBE/SDVE Compliance Evaluation Form
004338	MBE/WBE/SDVE Eligibility Determination for Joint Ventures
004339	MBE/WBE/SDVE GFE Determination
004340	SDVE Business Form
004541	Affidavit of Work Authorization

B. All bids shall be submitted without additional terms and conditions, modification or reservation on the bid forms with each space properly filled. Bids not on these forms will be rejected.

C. All bids shall be accompanied by a bid bond executed by the bidder and a duly authorized surety company, certified check, cashier's check or bank draft made payable to the Division of Facilities Management, Design and Construction, State of Missouri, in the amount indicated on the bid form, Section 004113. Failure of the contractor to submit the full amount required shall be sufficient cause to reject his bid. The bidder agrees that the proceeds of the check, draft or bond shall become the property of the State of Missouri, if for any reason the bidder withdraws his bid after closing, or if on notification of award refuses or is unable to execute tendered contract, provide an acceptable performance and payment bond, provide evidence of required insurance coverage and/or provide required copies of affirmative action plans within ten (10) working days after such tender.

D. The check or draft submitted by the successful bidder will be returned after the receipt of an acceptable performance and payment bond and execution of the formal contract. Checks or drafts of all other bidders will be returned within a reasonable time after it is determined that the bid represented by same will receive no further consideration by the State of Missouri. Bid bonds will only be returned upon request.

6.0 - SIGNING OF BIDS

A. A bid from an individual shall be signed as noted on the Bid Form.

B. A bid from a partnership or joint venture shall require only one signature of a partner, an officer of the joint venture authorized to bind the venture or an attorney-in-fact. If the bid is signed by an officer of a joint venture or an attorney-in-fact, a document evidencing the individual's authority to execute contracts should be included with the bid form.

C. A bid from a limited liability company (LLC) shall be signed by a manager or a managing member of the LLC.

D. A bid from a corporation shall have the correct corporate name thereon and the signature of an authorized officer of the corporation manually written. Title of office held by the person signing for the corporation shall appear, along with typed name of said individual. Corporate license number shall be provided and, if a corporation organized in a state other than Missouri, a Certificate of Authority to do business in the State of Missouri shall be attached. In addition, for corporate proposals, the President or Vice-President should sign as the bidder. If the signator is other than the corporate president or vice president, the bidder must provide satisfactory evidence that the signator has the legal authority to bind the corporation.

E. A bid should contain the full and correct legal name of the Bidder. If the Bidder is an entity registered with the Missouri Secretary of State, the Bidder's name on the bid form should appear as shown in the Secretary of State's records.

F. The Bidder should include its corporate license number on the Bid Form and, if the corporation is organized in a state other than Missouri, a Certificate of Authority to do business in the State of Missouri shall be attached to the bid form.

7.0 - RECEIVING BID SUBMITTALS

A. It is the bidder's sole responsibility to assure receipt by Owner of bid submittals by the date and time specified in the Invitation for Bid. Bids received after the date and time specified shall not be considered by the Owner.

B. Bids must be submitted through the MissouriBUYS statewide eProcurement system (https://www.missouribuys.mo.gov/) in accordance with the instructions for that system. The Owner shall only accept bids submitted through MissouriBUYS. Bids received by the Owner through any other means, including hard copies, shall not be considered and will be discarded by the Owner unopened.

C. To respond to an Invitation for Bid, the Bidder must first register with MissouriBUYS by going through the MissouriBUYS Home Page (https://www.missouribuys.mo.gov/), clicking the "Register" button at the top of the page, and completing the Vendor Registration. Once registered, the Bidder accesses its account by clicking the "Login" button at the top of the MissouriBUYS Home Page. Enter your USERID and PASSWORD, which the Bidder will select. Under Solicitations, select "View Current Solicitations." A new screen will open. Under "Filter by Agency" select "OA-FMDC-Contracts Chapter 8." Under "Filter by Opp. No." type in the State Project Number. Select "Submit." Above the dark blue bar, select "Other Active Opportunities." To see the Solicitation Summary, single click the Opp. No. (Project Number) and the summary will open. Single quick click each blue bar to open detailed information. The Bidder must read and accept the Original Solicitation Documents and complete all identified requirements. The Bidder should download and save all of the Original Solicitation Documents on its computer so that the Bidder can prepare its response to these documents. The Bidder should upload its completed response to the downloaded documents as an attachment to the electronic solicitation response.

D. Step-by-step instructions for how a registered vendor responds to a solicitation electronically are provided in Section 001116 – Invitation For Bid.

E. The Bidder shall submit its bid on the forms provided by the Owner on MissouriBUYS with each space fully and properly completed, including all amounts required for alternate bids, unit prices, cost accounting data, etc. The Owner may reject bids that are not on the Owner's forms or that do not contain all requested information.

F. No Contractor shall stipulate in his bid any conditions not contained in the specifications or standard bid form contained in the contract documents. To do so may subject the Contractor's bid to rejection.

G. The completed forms shall be without interlineations, alterations or erasures.

8.0 - MODIFICATION AND WITHDRAWAL OF BIDS

A. Bidder may withdraw his bid at any time prior to scheduled closing time for receipt of bids, but no bidder may withdraw his bid for a period of twenty (20) working days after the scheduled closing time for receipt of bids.

B. The Bidder shall modify his or her original bid by submitting a revised bid on MissouriBUYS.

9.0 - AWARD OF CONTRACT

A. The Owner reserves the right to reject any and/or all bids and further to waive all informalities in bidding when deemed in the best interest of the State of Missouri.

B. The Owner reserves the right to let other contracts in connection with the work, including but not by way of limitation, contracts for the furnishing and installation of furniture, equipment, machines, appliances and other apparatus.

C. In awarding the contract the Owner may take into consideration the bidder's skill, facilities, capacity, experience, responsibility, previous work record, financial standing and the necessity of prompt and efficient completion of work herein described. Inability of any bidder to meet the requirements mentioned above may be cause for rejection of his bid. However, no contract will be awarded to any individual,

partnership or corporation, who has had a contract with the State of Missouri declared in default within the preceding twelve months.

D. Award of alternates, if any, will be made in numerical order unless all bids received are such that the order of acceptance of alternates does not affect the determination of the low bidder.

E. No bid shall be considered binding upon the Owner until the written contract has been properly executed, a satisfactory bond has been furnished, evidence of required insurance coverage, submittal of executed Section 004541, Affidavit of Work Authorization form, documentation evidencing enrollment and participation in a federal work authorization program has been received and an affirmative action plan submitted. Failure to execute and return the contract and associated documents within the prescribed period of time shall be treated, at the option of the Owner, as a breach of bidder's obligation and the Owner shall be under no further obligation to bidder.

F. If the successful bidder is doing business in the State of Missouri under a fictitious name, he shall furnish to Owner, attached to the Bid Form, a properly certified copy of the certificate of Registration of Fictitious Name from the State of Missouri, and such certificate shall remain on file with the Owner.

G. Any successful bidder which is a corporation organized in a state other than Missouri shall furnish to the Owner, attached to the Bid Form, a properly certified copy of its current Certificate of Authority to do business in the State of Missouri, such certificate to remain on file with the Owner. No contract will be awarded by the Owner unless such certificate is furnished by the bidder.

H. Any successful bidder which is a corporation organized in the State of Missouri shall furnish at its own cost to the Owner, if requested, a Certificate of Good Standing issued by the Secretary of State, such certificate to remain on file with the Owner.

I. Transient employers subject to Sections 285.230 and 285.234, RSMo, (out-of-state employers who temporarily transact any business in the State of Missouri) may be required to file a bond with the Missouri Department of Revenue. No contract will be awarded by the Owner unless the successful bidder certifies that he has complied with all applicable provisions of Section 285.230-234.

J. Sections 285.525 and 285.530, RSMo, require business entities to enroll and participate in a federal work authorization program in order to be eligible to receive award of any state contract in excess of $5,000. Bidders should submit with their bid an Affidavit of Work Authorization (Section 004541) along with appropriate documentation evidencing such enrollment and participation. Section-004541, Affidavit of Work Authorization is located on the MissouriBUYS solicitation for this project. Bidders must also submit an E-Verify Memorandum before the Owner may award a contract to the Bidder. Information regarding a E-Verify is located at https://www.uscis.gov/e-verify/. The contractor shall be responsible for ensuring that all subcontractors and suppliers associated with this contract enroll in E-Verify.

10.0 - CONTRACT SECURITY

A. The successful bidder shall furnish a performance/payment bond as set forth in General Conditions Article 6.1 on a condition prior to the State executing the contract and issuing a notice to proceed.

11.0 - LIST OF SUBCONTRACTORS

A. If required by "Section 004113 – Bid Form," each bidder must submit as part of their bid a list of subcontractors to be used in performing the work (Section 004336). The list must specify the name of the single designated subcontractor, for each category of work listed in "Section 004336 - Proposed Subcontractors Form." If work within a category will be performed by more than one subcontractor, the bidder must provide the name of each subcontractor and specify the exact portion of the work to be done by each. Failure to list the Bidder's firm, or a subcontractor for each category of work identified on the Bid Form or the listing of more than one subcontractor for any category without designating the portion of work to be performed by each shall be cause for rejection of the bid. If the bidder intends to perform any of the designated subcontract work with the use of his own employees, the bidder shall make that fact clear, by listing his own firm for the subject category. **If any category of work is left vacant, the bid shall be rejected.**

12.0 - WORKING DAYS

A. Contract duration time is stated in working days and will use the following definition in determining the actual calendar date for contract completion:

1. Working days are defined as all calendar days except Saturdays, Sundays and the following State of Missouri observed holidays: New Year's Day, Martin Luther King, Jr. Day, Lincoln Day, Washington's Birthday, Truman Day, Memorial Day, Independence Day, Labor Day, Columbus Day, Veterans Day, Thanksgiving Day and Christmas Day.

13.0 - AMERICAN AND MISSOURI - MADE PRODUCTS AND FIRMS

A. By signing the bid form and submitting a bid on this project, the Bidder certifies that it will use American and Missouri products as set forth in Article 1.7 of the General Conditions. Bidders are advised to review those requirements carefully prior to bidding.

B. A preference shall be given to Missouri firms, corporations or individuals, or firms, corporations or individuals that maintain Missouri offices or places of business, when the quality of performance promised is equal or better and the price quoted is the same or less.

C. Pursuant to Section 34.076, RSMo, a contractor or Bidder domiciled outside the boundaries of the State of Missouri shall be required, in order to be successful, to submit a bid the same percent less than the lowest bid submitted by a responsible contractor or Bidder domiciled in Missouri as would be required for such a Missouri domiciled contractor or Bidder to succeed over the bidding contractor or Bidder domiciled outside Missouri on a like contract or bid being let in the person's domiciliary state and, further, the contractor or Bidder domiciled outside the boundaries of Missouri shall be required to submit an audited financial statement as would be required of a Missouri domiciled contractor or Bidder on a like contract or bid being let in the domiciliary state of that contractor or Bidder.

14.0 - MBE/WBE/SDVE INSTRUCTIONS

A. Definitions:

1. "MBE" means a Minority Business Enterprise.

2. "MINORITY" has the same meaning as set forth in 1 C.S.R. 10-17.010.

3. "MINORITY BUSINESS ENTERPRISE" has the same meaning as set forth in section 37.020, RSMo.

4. "WBE" means a Women's Business Enterprise.

5. "WOMEN'S BUSINESS ENTERPRISE" has the same meaning as set forth in section 37.020, RSMo.

6. "SDVE" means a Service-Disabled Veterans Enterprise.

7. "SERVICE-DISABLED VETERAN" has the same meaning as set forth in section 34.074, RSMo.

8. "SERVICE-DISABLED VETERAN ENTERPRISE" has the same meaning as "Service-Disabled Veteran Business" set forth in section 34.074, RSMo.

B. MBE/WBE/SDVE General Requirements:

1. For all bids greater than $100,000, the Bidder shall obtain MBE, WBE and SDVE participation in an amount equal to or greater than the percentage goals set forth in the Invitation for Bid and the Bid Form, unless the Bidder is granted a Good Faith Effort waiver by the Director of the Division, as set forth below. If the Bidder does not meet the MBE, WBE and SDVE goals, or make a good faith effort to do so, the Bidder shall be non-responsive, and its bid shall be rejected.

2. The Bidder should submit with its bid all of the information requested in the MBE/WBE/SDVE Compliance Evaluation Form for every MBE, WBE, or SDVE subcontractor or material supplier the Bidder intends to use for the contract work. The Bidder is required to submit all appropriate

MBE/WBE/SDVE documentation before the stated time and date set forth in the Invitation for Bid. If the Bidder fails to provide such information by the specified date and time, the Owner shall reject the bid.

3. The Director reserves the right to request additional information from a Bidder to clarify the Bidder's proposed MBE, WBE, and/or SDVE participation. The Bidder shall submit the clarifying information requested by the Owner within two (2) Working Days of receiving the request for clarification.

4. Pursuant to section 34.074, RSMo, a Bidder that is a SDVE doing business as Missouri firm, corporation, or individual, or that maintains a Missouri office or place of business, shall receive a three-point bonus preference in the contract award evaluation process. The bonus preference will be calculated and applied by reducing the bid amount of the eligible SDVE by three percent of the apparent low responsive bidder's bid. Based on this calculation, if the eligible SDVE's evaluation is less than the apparent low responsive bidder's bid, the eligible SDVE's bid becomes the apparent low responsive bid. This reduction is for evaluation purposes only, and will have no impact on the actual amount(s) of the bid or the amount(s) of any contract awarded. In order to be eligible for the SDVE preference, the Bidder must complete and submit with its bid the Missouri Service Disabled Veteran Business Form, and any information required by the form. The form is available on the MissouriBUYS solicitation for this project.

A. Computation of MBE/WBE/SDVE Goal Participation:

1. A Bidder who is a MBE, WBE, or SDVE may count 100% of the contract towards the MBE, WBE or SDVE goal, less any amounts awarded to another MBE, WBE or SDVE. (NOTE: A MBE firm that bids as general contractor must obtain WBE and SDVE participation; a WBE firm that bids as a general contractor must obtain MBE and SDVE participation; and a SDVE firm that bids as general contractor must obtain MBE and WBE participation.) In order for the remaining contract amount to be counted towards the MBE, WBE or SDVE goal, the Bidder must complete the MBE/WBE/SDVE Compliance Evaluation Form (Section 004337) identifying itself as an MBE, WBE or SDVE.

2. The total dollar value of the work granted to a certified MBE, WBE or SDVE by the Bidder shall be counted towards the applicable goal.

3. Expenditures for materials and supplies obtained from a certified MBE, WBE, or SDVE supplier or manufacturer may be counted towards the MBE, WBE and SDVE goals, if the MBE, WBE, or SDVE assumes the actual and contractual responsibility for the provision of the materials and supplies.

4. The total dollar value of the work granted to a second or subsequent tier subcontractor or a supplier may be counted towards a Bidder's MBE, WBE and SDVE goals, if the MBE, WBE, or SDVE properly assumes the actual and contractual responsibility for the work.

5. The total dollar value of work granted to a certified joint venture equal to the percentage of the ownership and control of the MBE, WBE, or SDVE partner in the joint venture may be counted towards the MBE/WBE/SDVE goals.

6. Only expenditures to a MBE, WBE, or SDVE that performs a commercially useful function in the work may be counted towards the MBE, WBE and SDVE goals. A MBE, WBE, or SDVE performs a commercially useful function when it is responsible for executing a distinct element of the work and carrying out its responsibilities by actually performing, managing and supervising the work or providing supplies or manufactured materials.

B. Certification of MBE/WBE/SDVE Subcontractors:

1. In order to be counted towards the goals, an MBE or WBE must be certified by the State of Missouri, Office of Equal Opportunity and an SDVE must be certified by the State of Missouri, Office of Administration, Division of Purchasing and Material Management or by the Department of Veterans Affairs.

2. The Bidder may determine the certification status of a proposed MBE or WBE subcontractor or supplier by referring to the Office of Equal Opportunity (OEO)'s online MBE/WBE directory (https://apps1.mo.gov/oeo/). The Bidder may determine the eligibility of a SDVE subcontractor or supplier by referring to the Division of Purchasing and Materials Management's online SDVE directory (http://oa.mo.gov/purchasing/vendor-information/missouri-service-disabled-veteran-business-enterprise-sdve-information) or the Department of Veterans Affairs' directory (https://www.vip.vetbiz.gov/).

3. Additional information, clarifications, etc., regarding the listings in the directories may be obtained by calling the Division at (573)751-3339 and asking to speak to the Contract Specialist of record as shown in the Supplementary Conditions (Section 007300).

C. Waiver of MBE/WBE/SDVE Participation:

1. If a Bidder has made a good faith effort to secure the required MBE, WBE and/or SDVE participation and has failed, the Bidder shall submit with its bid the information requested in MBE/WBE/SDVE Good Faith Effort (GFE) Determination form. The GFE forms are located on the MissouriBUYS solicitation for this project. The Director will determine if the Bidder made a good faith effort to meet the applicable goals. If the Director determines that the Bidder did not make a good faith effort, the bid shall be rejected as being nonresponsive to the bid requirements. Bidders who demonstrate that they have made a good faith effort to include MBE, WBE, and/or SDVE participation will be determined to be responsive to the applicable participation goals, regardless of the percent of actual participation obtained, if the bid is otherwise acceptable.

2. In determining whether a Bidder has made a good faith effort to obtain MBE, WBE and/or SDVE participation, the Director may evaluate the factors set forth in 1 CSR 30-5.010(6)(C) and the following:

   a. The amount of actual participation obtained;

   b. How and when the Bidder contacted potential MBE, WBE, and SDVE subcontractors and suppliers;

   c. The documentation provided by the Bidder to support its contacts, including whether the Bidder provided the names, addresses, phone numbers, and dates of contact for MBE/WBE/SDVE firms contacted for specific categories of work;

   d. If project information, including plans and specifications, were provided to MBE/WBE/SDVE subcontractors;

   e. Whether the Bidder made any attempts to follow-up with MBE, WBE or SDVE firms prior to bid;

   f. Amount of bids received from any of the subcontractors and/or suppliers that the Bidder contacted;

   g. The Bidder's stated reasons for rejecting any bids;

3. If no bidder has obtained any participation in a particular category (MBE/WBE/SDVE) or made a good faith effort to do so, the Director may waive that goal rather than rebid.

D. Contractor MBE/WBE/SDVE Obligations

1. If awarded a contract, the Bidder will be contractually required to subcontract with or obtain materials from the MBE, WBE, and SDVE firms listed in its bid, in amounts equal to or greater than the dollar amount bid, unless the amount is modified in writing by the Owner.

2. If the Contractor fails to meet or maintain the participation requirements contained in the Contractor's bid, the Contractor must satisfactorily explain to the Director why it cannot comply

with the requirement and why failing meeting the requirement was beyond the Contractor's control. If the Director finds the Contractor's explanation unsatisfactory, the Director may take any appropriate action including, but not limited to:

a. Declaring the Contractor ineligible to participate in any contracts with the Division for up to twelve (12) months (suspension); and/or

b. Declaring the Contractor be non-responsive to the Invitation for Bid, or in breach of contract and rejecting the bid or terminating the contract.

3. If the Contractor replaces an MBE, WBE, or SDVE during the course of this contract, the Contractor shall replace it with another MBE, WBE, or SDVE or make a good faith effort to do so. All MBE, WBE and SDVE substitutions must be approved by the Director.

4. The Contractor shall provide the Owner with regular reports on its progress in meeting its MBE/WBE/SDVE obligations. At a minimum, the Contractor shall report the dollar-value of work completed by each MBE, WBE, or SDVE during the preceding month and the cumulative total of work completed by each MBE, WBE or SDVE to date with each monthly application for payment. The Contractor shall also make a final report, which shall include the total dollar-value of work completed by each MBE, WBE, and SDVE during the entire contract.

SECTION 003132 - GEOTECHNICAL DATA

1.1 GEOTECHNICAL DATA

A. This Document with its referenced attachments is part of the Procurement and Contracting Requirements for Project. They provide information for Bidders' convenience and are intended to supplement rather than serve in lieu of Bidders' own investigations. They are made available for Bidders' convenience and information. This Document and its attachments are not part of the Contract Documents.

B. Because subsurface conditions indicated by the soil borings are a sampling in relation to the entire construction area, and for other reasons, the Contracting Officer, the Architect/Engineer, the Architect's/Engineer's consultants, and the firm reporting the subsurface conditions do not warranty the conditions below the depths of the borings or that the strata logged from the borings are necessarily typical of the entire site. Any party using the information described in the soil borings and geotechnical report shall accept full responsibility for its use.

C. A geotechnical investigation report for Project, prepared by Palmerton & Parrish, Inc., dated February 9, 2018, is available for viewing as appended to this Document.

1. The opinions expressed in this report are those of a geotechnical engineer and represent interpretations of subsoil conditions, tests, and results of analyses conducted by a geotechnical engineer. The Contracting Officer and Architect/Engineer are not responsible for interpretations or conclusions drawn from the data.
2. Any party using information described in the geotechnical report shall make additional test borings and conduct other exploratory operations that may be required to determine the character of subsurface materials that may be encountered.

END OF SECTION 003132

STATE OF MISSOURI
DIVISION OF FACILITIES MANAGEMENT, DESIGN AND CONSTRUCTION
MBE/WBE/SDVE DIRECTORY

The MBE/WBE Directory for goods and services is maintained by the Office of Equal Opportunity (OEO). The current Directory can be accessed at the following web address:

https://apps1.mo.gov/MWBCertifiedFirms/

Please note that you may search by MBE, WBE, or both as well as by region, location of the business by city or state, as well as by commodity or service.

The SERVICE DISABLED VETERAN ENTERPRISE (SDVE) Directory (s) may be accessed at the following web addresses:

https://oa.mo.gov/sites/default/files/sdvelisting.pdf

https://www.vip.vetbiz.va.gov

State of Missouri
Construction Contract

THIS AGREEMENT, made (DATE) by and between:

Contractor Name and Address

hereinafter called the "Contractor,"

and the **State of Missouri**, hereinafter called the **"Owner"**, represented by the Office of Administration, Division of Facilities Management, Design and Construction, on behalf of the Department of Public Safety, Missouri National Guard.

WITNESSETH, that the Contractor and the Owner, for the consideration stated herein agree as follows:

ARTICLE 1. STATEMENT OF WORK

The Contractor shall furnish all labor and materials and perform all work required for furnishing and installing all labor, materials, equipment and transportation and everything necessarily inferred from the general nature and tendency of the plans and specifications for the proper execution of the work for:

Project Name:	**TASMG Readiness Center** **AVCRAD Facility** **Springfield, Missouri**
Project Number:	**T1809-01**

in strict accordance with the Contract Documents as enumerated in Article 7, all of which are made a part hereof.

ARTICLE 2. TIME OF COMPLETION

The contract performance time is **284** working days from the transmittal date of this agreement. The contract completion date is **MONTH, DAY, YEAR**. This time includes ten (10) working days for the Contractor to receive, sign and return the contract form along with required bonding and insurance certificates. Failure of the Contractor to provide correct bonding and insurance within the ten (10) working days shall not be grounds for a time extension. Receipt of proper bonding and insurance is a condition precedent to the formation of the contract and if not timely received, may result in forfeiture of the Contractor's bid security. Work may not commence until the Owner issues a written Notice to Proceed and must commence within seven (7) working days thereafter.

ARTICLE 3. LIQUIDATED DAMAGES

Whenever time is mentioned in this contract, time shall be and is of the essence of this contract. The Owner would suffer a loss should the Contractor fail to have the work embraced in this contract fully completed on or before the time above specified. THEREFORE, the parties hereto realize in order to adjust satisfactorily the damages on account of such failure that it might be impossible to compute accurately or estimate the amount of such loss or damages which the Owner would sustain by reason of failure to complete fully said work within the time required by this contract. The Contractor hereby covenants and agrees to pay the Owner, as and for **liquidated damages, the sum of $1,500** per day for each and every day, Sunday and legal holidays excepted, during which the work remains incomplete and unfinished. Any sum which may be due the Owner for such damages shall be deducted and retained by the Owner from any balance which may be due the Contractor when said work shall have been finished and accepted. But such provisions shall not release the Bond of the Contractor from liability according to its terms. In case of failure to complete, the Owner will be under no obligation to show or prove any actual or specific loss or damage.

ARTICLE 4. CONTRACT SUM

The Owner shall pay the Contractor for the prompt, faithful and efficient performance of the conditions and undertakings of this contract, subject to additions, and deductions as provided herein, in current funds the sum of:

Base Bid: $

The Owner accepts the following Alternate Bids:

Alternate One: $

Alternate Two: $

Alternate Three: $

Alternate Four: $

TOTAL CONTRACT AMOUNT: ($CONTRACT AMOUNT)

UNIT PRICES: The Owner accepts the following Unit Prices:

For changing specified quantities of work from those indicated by the contract drawings and specifications, upon written instructions of Owner, the following unit prices shall prevail. The unit prices include all labor, overhead and profit, materials, equipment, appliances, bailing, shoring, shoring removal, etc., to cover the finished work of the several kinds of work called for. Only a single unit price shall be given and it shall apply for either MORE or LESS work than that shown on the drawings and called for in the specifications or included in the Base Bid. In the event of more or less units than so indicated or included, change orders may be issued for the increased or decreased amount.

ARTICLE 5. PREVAILING WAGE RATE

It is understood and agreed by and between the parties that not less than the prevailing hourly rate of wages shall be paid for work of a similar character in the locality in which the work is performed, and not less than the prevailing hourly rate of wages for legal holiday and overtime work in the locality in which the work is performed, both as determined by the Department of Labor and Industrial Relations or as determined by the court on appeal, to all workmen employed by or on behalf of the Contractor or any subcontractor, exclusive of maintenance work. Only such workmen as are directly employed by the Contractor or his subcontractors, in actual construction work on the site shall be deemed to be employed.

When the hauling of materials or equipment includes some phase of the construction other than the mere transportation to the site of the construction, workmen engaged in this dual capacity shall be deemed to be employed directly on the project and entitled to the prevailing wage.

ARTICLE 6. MINORITY/WOMEN/SERVICE DISABLED VETERAN BUSINESS ENTERPRISE PARTICIPATION

The Contractor has been granted a waiver of the 10% MBE and 10% WBE and 3% SDVE participation goals. The Contractor agrees to secure the MBE/WBE/SDVE participation amounts for this project as follows: (OR)

The Contractor has met the MBE/WBE/SDVE participation goals and agrees to secure the MBE/WBE/SDVE participation amounts for this project as follows:

MBE/WBE/SDVE Firm: Subcontract Amt:$
MBE/WBE/SDVE Firm: Subcontract Amt:$
MBE/WBE/SDVE Firm: Subcontract Amt:$

Total $

MBE/WBE/SDVE assignments identified above shall not be changed without a Contract Change signed by the Owner.

The Director of the Division of Facilities Management, Design and Construction or his Designee shall be the final authority to resolve disputes and disagreements between the Contractor and the MBE/WBE/SDVE firms listed above when such disputes impact the subcontract amounts shown above.

ARTICLE 7. CONTRACT DOCUMENTS

Contract documents shall consist of the following component parts:

1. Division 0, with executed forms
2. Division 1
3. Executed Construction Contract Form
4. The Drawings
5. The Technical Specifications
6. Addenda
7. Contractor's Proposal as accepted by the Owner

By signature below, the parties hereby execute this contract document.

APPROVED:

_____

Mark Hill, P.E., Director
Division of Facilities Management,
Design and Construction

_____

Contractor's Authorized Signature

I, Corporate Secretary, certify that I am Secretary of the corporation named above and that (CONTRACTOR NAME), who signed said contract on behalf of the corporation, was then (TITLE) of said corporation and that said contract was duly signed for and in behalf of the corporation by authority of its governing body, and is within the scope of its corporate powers.

_____

Corporate Secretary

STATE OF MISSOURI
OFFICE OF ADMINISTRATION
DIVISION OF FACILITIES MANAGEMENT, DESIGN AND CONSTRUCTION

AFFIDAVIT FOR AFFIRMATIVE ACTION

PROJECT NUMBER

NAME

First being duly sworn on oath states: that

he/she is the ☐ sole proprietor ☐ partner ☐ officer or ☐ manager or managing member of

NAME

a ☐ sole proprietorship ☐ partnership

☐ limited liability company (LLC)

or ☐ corporation, and as such, said proprietor, partner, or officer is duly authorized to make this

affidavit on behalf of said sole proprietorship, partnership, or corporation; that under the contract known as

PROJECT TITLE

Less than 50 persons in the aggregate will be employed and therefore, the applicable Affirmative Action

requirements as set forth in Article 1.4 of the General Conditions of the State of Missouri have been met.

PRINT NAME & SIGNATURE	DATE

NOTARY INFORMATION

NOTARY PUBLIC EMBOSSER SEAL	STATE OF	COUNTY (OR CITY OF ST. LOUIS)	USE RUBBER STAMP IN CLEAR AREA BELOW
	SUBSCRIBED AND SWORN BEFORE ME, THIS DAY OF YEAR		
	NOTARY PUBLIC SIGNATURE	MY COMMISSION EXPIRES	
	NOTARY PUBLIC NAME (TYPED OR PRINTED)		

MO 300-1401 (05/18) FILE/Construction Contract

Bond No._____

SECTION 006113 - PERFORMANCE AND PAYMENT BOND FORM

KNOW ALL MEN BY THESE PRESENTS, THAT we _____

as principal, and _____

_____as Surety, are held and firmly bound unto the

STATE OF MISSOURI. in the sum of _____ Dollars ($)

for payment whereof the Principal and Surety bind themselves, their heirs, executors, administrators and successors, jointly and severally, firmly by these presents.

WHEREAS, the Principal has, by means of a written agreement dated the _____

day of_____, 20_____, enter into a contract with the State of Missouri for

_____

_____

_____

(Insert Project Title and Number)

NOW, THEREFORE, if the Principal shall faithfully perform and fulfill all the undertakings, covenants, terms, conditions and agreements of said contract during the original term of said contract and any extensions thereof that may be granted by the State of Missouri, with or without notice to the Surety and during the life of any guaranty required under the contract; and shall also faithfully perform and fulfill all undertakings, covenants, terms, conditions and agreements of any and all duly authorized modifications of said contract that may hereafter be made with or without notice to the Surety; and shall also promptly make payment for materials incorporated, consumed or used in connection with the work set forth in the contract referred to above, and all insurance premiums, both compensation and all other kinds of insurance, on said work, and for all labor performed on such work, whether by subcontractor or otherwise, at not less than the prevailing hourly rate of wages for work of a similar character (exclusive of maintenance work) in the locality in which the work is performed and not less than the prevailing hourly rate of wages for legal holiday and overtime work (exclusive of maintenance work) in the locality in which the work is performed both as determined by the Department of Labor and Industrial Relations or determined by the Court of Appeal, as provided for in said contract and in any and all duly authorized modifications of said contract that may be hereafter made, with or without notice to the Surety, then, this obligation shall be void and of no effect, but it is expressly understood that if the Principal should make default in or should fail to strictly, faithfully and efficiently do, perform and comply with any or more of the covenants, agreements, stipulations, conditions, requirements or undertakings, as specified in or by the terms of said contract, and with the time therein named, then this obligation shall be valid and binding upon each of the parties hereto and this bond shall remain in full force and effect; and the same may be sued on at the instance of any material man, laborer, mechanic, subcontractor, individual, or otherwise to whom such payment is due, in the name of the State of Missouri, to the use of any such person.

AND, IT IS FURTHER specifically provided that any modifications which may hereinafter be made in the terms of the contract or in the work to be done under it or the giving by the Owner of any extension of the time for the performance of the contract or any other forbearance on the part of either the Owner or the Principal to the other, shall not in any way release the Principal and the Surety, or either or any of them, their heirs, executors, administrators and successors, from their liability hereunder, notice to the Surety of any such extension, modifications or forbearance being hereby waived.

IN WITNESS WHEREOF, the above bounden parties have executed the within instrument this _____ day of _____, 20 ____.

AS APPLICABLE:

AN INDIVIDUAL

Name: _____

Signature: _____

A PARTNERSHIP

Name of Partner: _____

Signature of Partner: _____

Name of Partner: _____

Signature of Partner: _____

CORPORATION

Firm Name: _____

Signature of President: _____

SURETY

Surety Name: _____

Attorney-in-Fact: _____

Address of Attorney-in-Fact: _____

_____

Telephone Number of Attorney-in-Fact: _____

Signature Attorney-in-Fact: _____

NOTE: Surety shall attach Power of Attorney

STATE OF MISSOURI
OFFICE OF ADMINISTRATION
DIVISION OF FACILITIES MANAGEMENT, DESIGN AND CONSTRUCTION

PRODUCT SUBSTITUTION REQUEST

PROJECT NUMBER

PROJECT TITLE AND LOCATION

CHECK APPROPRIATE BOX

☐ SUBSTITUTION PRIOR TO BID OPENING
(Minimum of (5) working days prior to receipt of Bids as per Article 4 – Instructions to Bidders)

☐ SUBSTITUTION FOLLOWING AWARD
(Maximum of (20) working days from Notice to Proceed as per Article 3 – General Conditions)

FROM: BIDDER/CONTRACTOR (PRINT COMPANY NAME)

TO: ARCHITECT/ENGINEER (PRINT COMPANY NAME)

Bidder/Contractor hereby requests acceptance of the following product or systems as a substitution in accordance with provisions of Division One of the Bidding Documents:

SPECIFIED PRODUCT OR SYSTEM

SPECIFICATION SECTION NO.

SUPPORTING DATA

☐ Product data for proposed substitution is attached (include description of product, standards, performance, and test data)

☐ Sample ☐ Sample will be sent, if requested

QUALITY COMPARISON

	SPECIFIED PRODUCT	SUBSTITUTION REQUEST
NAME, BRAND		
CATALOG NO.		
MANUFACTURER		
VENDOR		

PREVIOUS INSTALLATIONS

PROJECT	ARCHITECT/ENGINEER	
LOCATION		DATE INSTALLED

SIGNIFICANT VARIATIONS FROM SPECIFIED PRODUCT

REASON FOR SUBSTITUTION

_____

_____

_____

_____

_____

_____

DOES PROPOSED SUBSTITUTION AFFECT OTHER PARTS OF WORK?

☐ YES ☐ NO

IF YES, EXPLAIN _____

_____

_____

_____

_____

_____

SUBSTITUTION REQUIRES DIMENSIONAL REVISION OR REDESIGN OF STRUCTURE OR A/E WORK

☐ YES ☐ NO

BIDDER'S/CONTRACTOR'S STATEMENT OF CONFORMANCE OF PROPOSED SUBSTITUTION TO CONTRACT REQUIREMENT:

We have investigated the proposed substitution. We believe that it is equal or superior in all respects to specified product, except as stated above; that it will provide the same Warranty as specified product; that we have included complete implications of the substitution; that we will pay redesign and other costs caused by the substitution which subsequently become apparent; and that we will pay costs to modify other parts of the Work as may be needed, to make all parts of the Work complete and functioning as a result of the substitution.

BIDDER/CONTRACTOR	DATE

REVIEW AND ACTION

☐ Resubmit Substitution Request with the following additional information:

_____

☐ Substitution is accepted.

☐ Substitution is accepted with the following comments:

_____

☐ Substitution is not accepted.

ARCHITECT/ENGINEER	DATE

STATE OF MISSOURI
OFFICE OF ADMINISTRATION
DIVISION OF FACILITIES MANAGEMENT, DESIGN AND CONSTRUCTION

FINAL RECEIPT OF PAYMENT AND RELEASE

PROJECT NUMBER

KNOW ALL MEN BY THESE PRESENT THAT: hereinafter called "Subcontractor" who heretofore entered into an agreement with hereinafter called "Contractor", for the performance of work and/or furnishing of material for the construction of the project entitled

(PROJECT TITLE, PROJECT LOCATION, AND PROJECT NUMBER)

at

(ADDRESS OF PROJECT)

for the State of Missouri (Owner) which said subcontract is by this reference incorporated herein, in consideration of such final payment by Contractor.

DOES HEREBY:

1. ACKNOWLEDGE that they have been **PAID IN FULL** all sums due for work and materials contracted or done by their Subcontractors, Material Vendors, Equipment and Fixture Suppliers, Agents and Employees, or otherwise in the performance of the Work called for by the aforesaid Contract and all modifications or extras or additions thereto, for the construction of said project or otherwise.
2. RELEASE and fully, finally, and forever discharge the Owner from any and all suits, actions, claims, and demands for payment for work performed or materials supplied by Subcontractor in accordance with the requirements of the above referenced Contract.
1. REPRESENT that all of their Employees, Subcontractors, Material Vendors, Equipment and Fixture Suppliers, and everyone else has been **paid in full** all sums due them, or any of them, in connection with performance of said Work, or anything done or omitted by them, or any of them in connection with the construction of said improvements, or otherwise.

DATED this day of , 20 .

NAME OF SUBCONTRACTOR

BY (TYPED OR PRINTED NAME)

SIGNATURE

TITLE

ORIGINAL: FILE/Closeout Documents

STATE OF MISSOURI
OFFICE OF ADMINISTRATION
DIVISION OF FACILITIES MANAGEMENT, DESIGN AND CONSTRUCTION

MBE/WBE/SDVE PROGRESS REPORT

SUBMIT WITH **ALL** INVOICES: (PLEASE CHECK APPROPRIATE BOX BELOW)

☐CONSULTANT ☐CONSTRUCTION

INVOICE NO.	PROJECT NUMBER
CHECK IF FINAL ☐**FINAL**	DATE

PROJECT TITLE

PROJECT LOCATION

FIRM

TOTAL CONTRACT AMOUNT

$

THE PERCENTAGE AND DOLLAR AMOUNT OF THIS PROJECT THAT ARE TO BE MBE/WBE/SDVE AS INDICATED IN THE ORIGINAL CONTRACT: **%** and **$** **.**

CHECK MBE WBE SDVE	ITEM OF WORK	TOTAL AMOUNT OF SUBCONTRACT	$ AMOUNT & % COMPLETE (PAID-TO-DATE)	CONSULTANT/SUBCONSULTANT OR CONTRACTOR/SUBCONTRACTOR/SUPPLIER NAME, ADDRESS, CONTACT, AND PHONE NUMBER
MBE ☐ WBE ☐ SDVE☐		$	$ %	- -
MBE ☐ WBE ☐ SDVE☐		$	$ %	- -
MBE ☐ WBE ☐ SDVE☐		$	$ %	- -
MBE ☐ WBE ☐ SDVE☐		$	$ %	- -
MBE ☐ WBE ☐ SDVE☐		$	$ %	- -

ORIGINAL: Attach to ALL Progress and Final Payments

STATE OF MISSOURI
OFFICE OF ADMINISTRATION
DIVISION OF FACILITIES MANAGEMENT, DESIGN AND CONSTRUCTION
AFFIDAVIT – COMPLIANCE WITH PREVAILING WAGE LAW

PROJECT NUMBER

Before me, the undersigned Notary Public, in and for the County of _____

State of _____ personally came and appeared _____
(NAME)

_____ of the _____
(POSITION) (NAME OF THE COMPANY)

(a corporation) (a partnership) (a proprietorship) and after being duly sworn did depose and say that all provisions and requirements set out in Chapter 290, Sections 290.210 through and including 290.340, Missouri Revised Statutes, pertaining to the payment of wages to workmen employed on public works project have been fully satisfied and there has been no exception to the full and completed compliance with said provisions and requirements and with Wage Determination No: _____ issued by the Department of Labor and Industrial Relations, State of Missouri on the _____ day of _____ 20 __ in carrying out the contract and working in connection with _____
(NAME OF PROJECT)

Located at _____ in _____ County
(NAME OF THE INSTITUTION)

Missouri, and completed on the _____ day of _____ 20 __

SIGNATURE

NOTARY INFORMATION

NOTARY PUBLIC EMBOSSER OR BLACK INK RUBBER STAMP SEAL	STATE		COUNTY (OR CITY OF ST. LOUIS)
	SUBSCRIBED AND SWORN BEFORE ME, THIS DAY OF YEAR		**USE RUBBER STAMP IN CLEAR AREA BELOW**
	NOTARY PUBLIC SIGNATURE	MY COMMISSION EXPIRES	
	NOTARY PUBLIC NAME (TYPED OR PRINTED)		

FILE: Closeout Documents

GENERAL CONDITIONS

INDEX

ARTICLE:

1. General Provisions

1.1. Definitions

1.2. Drawings and Specifications

1.3. Compliance with Laws, Permits, Regulations and Inspections

1.4. Nondiscrimination in Employment

1.5. Anti-Kickback

1.6. Patents and Royalties

1.7. Preference for American and Missouri Products and Services

1.8. Communications

1.9. Separate Contracts and Cooperation

1.10. Assignment of Contract

1.11. Indemnification

1.12. Disputes and Disagreements

2. Owner/Designer Responsibilities

3. Contractor Responsibilities

3.1. Acceptable Substitutions

3.2. Submittals

3.3. As-Built Drawings

3.4. Guaranty and Warranties

3.5. Operation and Maintenance Manuals

3.6. Other Contractor Responsibilities

3.7. Subcontracts

4. Changes in the Work

4.1. Changes in the Work

4.2. Changes in Completion Time

5. Construction and Completion

5.1. Construction Commencement

5.2. Project Construction

5.3. Project Completion

5.4. Payments

6. Bond and Insurance

6.1. Bond

6.2. Insurance

7. Termination or Suspension of Contract

7.1. For Site Conditions

7.2. For Cause

7.3. For Convenience

SECTION 007213 - GENERAL CONDITIONS

A. These General Conditions apply to each section of these specifications. The Contractor is subject to the provisions contained herein.

B. The General Conditions are intended to define the relationship of the Owner, the Designer and the Contractor thereby establishing certain rules and provisions governing the operation and performance of the work so that the work may be performed in a safe, orderly, expeditious and workmanlike manner.

ARTICLE 1 – GENERAL PROVISIONS

ARTICLE 1.1 - DEFINITIONS

A. As used in these contract documents, the following terms shall have the meanings and refer to the parties designated in these definitions.

1. **"COMMISSIONER":** The Commissioner of the Office of Administration.
2. **"CONSTRUCTION DOCUMENTS":** The "Construction Documents" shall consist of the Project Manual, Drawings and Addenda.
3. **"CONSTRUCTION REPRESENTATIVE:"** Whenever the term "Construction Representative" is used, it shall mean the Owner's Representative at the work site.
4. **"CONTRACTOR"**: Party or parties who have entered into a contract with the Owner to furnish work under these specifications and drawings.
5. **"DESIGNER"**: When the term "Designer" is used herein, it shall refer to the Architect, Engineer, or Consultant of Record specified and defined in Paragraph 2.0 of the Supplemental Conditions, or his duly authorized representative. The Designer may be either a consultant or state employee.
6. **"DIRECTOR"**: Whenever the term "Director" is used, it shall mean the Director of the Division of Facilities Management, Design and Construction or his Designee, representing the Office of Administration, State of Missouri. The Director is the agent of the Owner.
7. **"DIVISION":** Shall mean the Division of Facilities Management, Design and Construction, State of Missouri.
8. **"INCIDENTAL JOB BURDENS":** Shall mean those expenses relating to the cost of work, incurred either in the home office or on the job-site, which are necessary in the course of doing business but are incidental to the job. Such costs include office supplies and equipment, postage, courier services, telephone expenses including long distance, water and ice and other similar expenses.
9. **"JOINT VENTURE"**: An association of two (2) or more businesses to carry out a single business enterprise for profit for which purpose they combine their property, capital, efforts, skills and knowledge.
10. **"OWNER"**: Whenever the term "Owner" is used, it shall mean the State of Missouri.
11. **"PROJECT"**: Wherever the term "Project" is used, it shall mean the work required to be completed by the construction contract.
12. **"PROJECT MANUAL"**: The "Project Manual" shall consist of Introductory Information, Invitation for Bid, Instructions to Bidders, Bid Documents, Additional Information, Standard Forms, General Conditions, Supplemental General Conditions, General Requirements and Technical Specifications.
13. **"SUBCONTRACTOR"**: Party or parties who contract under, or for the performance of part or this entire Contract between the Owner and Contractor. The subcontract may or may not be direct with the Contractor.
14. **"WORK"**: Labor, material, supplies, plant and equipment required to perform and complete the service agreed to by the Contractor in a safe, expeditious, orderly and workmanlike manner so that the project shall be complete and finished in the best manner known to each respective trade.
15. "**WORKING DAYS**": are all calendar days except Saturdays, Sundays and the following holidays: New Year's Day, Martin Luther King, Jr. Day, Lincoln Day, Washington's Birthday (observed), Truman Day, Memorial Day, Independence Day, Labor Day, Columbus Day, Veterans Day (observed), Thanksgiving Day, Christmas Day.

ARTICLE 1.2 DRAWINGS AND SPECIFICATIONS

A. In case of discrepancy between drawings and specifications, specifications shall govern. Should discrepancies in architectural drawings, structural drawings and mechanical drawings occur, architectural drawings shall govern and, in case of

conflict between structural and mechanical drawings, structural drawings shall govern.

B. Specifications are separated into titled divisions for convenience of reference only and to facilitate letting of contracts and subcontracts. The Contractor is responsible for establishing the scope of work for subcontractors, which may cross titled divisions. Neither the Owner nor Designer will establish limits and jurisdiction of subcontracts.

C. Figured dimensions take precedence over scaled measurements and details over smaller scale general drawings. In the event of conflict between any of the documents contained within the contract, the documents shall take precedence and be controlling in the following sequence: addenda, supplementary general conditions, general conditions, division 1 specifications, technical division specifications, drawings, bid form and instructions to bidders.

D. Anything shown on drawings and not mentioned in these specifications or vice versa, as well as any incidental work which is obviously necessary to complete the project within the limits established by the drawings and specifications, although not shown on or described therein, shall be performed by the Contractor at no additional cost as a part of his contract.

E. Upon encountering conditions differing materially from those indicated in the contract documents, the Contractor shall promptly notify the Designer and Construction Representative in writing before such conditions are disturbed. The Designer shall promptly investigate said conditions and report to the Owner, with a recommended course of action**.** If conditions do materially differ and cause an increase or decrease in contract cost or time required for completion of any portion of the work, a contract change will be initiated as outlined in Article 4 of these General Conditions.

E. Only work included in the contract documents is authorized, and the Contractor shall do no work other than that described therein or in accordance with appropriately authorized and approved contract changes.

ARTICLE 1.3 - COMPLIANCE WITH LAWS, PERMITS, REGULATIONS AND INSPECTIONS

A. Since the Owner is the State of Missouri, municipal or political subdivisions, zoning ordinances, construction codes (other than licensing of trades), and other like ordinances are not applicable to construction on Owner's property, and Contractor will not be required to submit drawings and specifications to any municipal or political subdivision, authority, obtain construction permits or any other licenses (other than licensing of trades) or permits from or submit to inspections by any municipality or political subdivision relating to the construction for this project. All permits or licenses required by municipality or political subdivision for operation on <u>property not belonging</u> to Owner shall be obtained by and paid for by Contractor. Each Contractor shall comply with all <u>applicable</u> laws, ordinances, rules and regulations that pertain to the work of this contract.

B. Contractors, subcontractors and their employees engaged in the businesses of electrical, mechanical, plumbing, carpentry, sprinkler system work, and other construction related trades shall be licensed to perform such work by the municipal or political subdivision where the project is located, if such licensure is required by local code. Local codes shall dictate the level (master, journeyman, and apprentice) and the number, type and ratio of licensed tradesmen required for this project within the jurisdiction of such municipal or political subdivision.

C. Equipment and controls manufacturers and their authorized service and installation technicians that do not maintain an office within the jurisdiction of the municipal or political subdivision but are a listed or specified contractor or subcontractor on this project are exempt from Paragraph 1.3 B above.

D. The Contractor shall post a copy of the wage determination issued for the project and included as a part of the contract documents, in a prominent and easily accessible location at the site of construction for the duration of the project.

E. Any contractor or subcontractor to such contractor at any tier signing a contract to work on this project shall provide a ten-hour Occupational Safety and Health Administration (OSHA) construction safety program for their on-site employees which includes a course in construction safety and health approved by OSHA or a similar program approved by the Department of Labor and Industrial Relations which is at least as stringent as an approved OSHA program. The contractor shall forfeit as a penalty to the public body on whose behalf the contract is made or awarded, two thousand five hundred dollars plus one hundred dollars for each employee employed by the contractor or subcontractor, for each calendar day, or portion thereof, such employee is employed without the required training.

ARTICLE 1.4 - NONDISCRIMINATION IN EMPLOYMENT

A. The Contractor and his subcontractors will not discriminate against individuals based on race, color, religion, national origin, sex, disability, or

age, but may use restrictions which relate to bona fide occupational qualifications. Specifically, the Contractor and his subcontractors shall not discriminate:

1. Against recipients of service on the basis of race, color, religion, national origin, sex, disability or age.
2. Against any employee or applicant, for employment on the basis of race, color, religion, national origin, sex or otherwise qualified disability status.
3. Against any applicant for employment or employee on the basis of age, where such applicant or employee is between ages 40 and 70 and where such Contractor employs at least 20 persons.
4. Against any applicant for employment or employee on the basis of that person's status as a disabled or Vietnam-era veteran.

The Contractor and his Subcontractors will take affirmative action to insure applicants for employment and employees are treated equally without regard to race, color, religion, national origin, sex, disability, or age. Such action shall include, but not be limited to, the following: employment, upgrading, demotion and transfer; recruitment or recruitment advertising; and selection for training, including apprenticeship. The Contractor and his Subcontractors will give written notice of their commitments under this clause to any labor union with which they have bargaining or other agreements.

B. The Contractor and his Subcontractors shall develop, implement, maintain and submit in writing to the Owner an affirmative action program if at least fifty (50) persons in the aggregate are employed under this contract. If less than fifty (50) persons in the aggregate are to be employed under this contract, the Contractor shall submit, in lieu of the written affirmative action program, a properly executed Affidavit for Affirmative Action in the form included in the contract specifications. For the purpose of this section, an "affirmative action program" means positive action to influence all employment practices (including, but not limited to, recruiting, hiring, promoting and training) in providing equal employment opportunity regardless of race, color, sex, national origin, religion, age (where the person affected is between age 40 and 70), disabled and Vietnam-era veteran status, and disability. Such "affirmative action program" shall include:

1. A written policy statement committing the total organization to affirmative action and assigning management responsibilities and procedures for evaluation and dissemination;
2. The identification of a person designated to handle affirmative action;
3. The establishment of non-discriminatory selection standards, objective measures to analyze recruitment, an upward mobility system, a wage and salary structure, and standards applicable to lay-off, recall, discharge, demotion and discipline;
4. The exclusion of discrimination from all collective bargaining agreements; and
5. Performance of an internal audit of the reporting system to monitor execution and to provide for future planning.

In the enforcement of this non-discrimination clause, the Owner may use any reasonable procedures available, including, but not limited to: requests, reports, site visits and inspection of relevant documents of contractors and subcontractors.

C. In the event of the Contractor's or his subcontractor's noncompliance with any provisions of this Article of the Contract, the Owner may cancel this contract in whole or in part or require the Contractor to terminate his contract with the subcontractor.

ARTICLE 1.5 - ANTI-KICKBACK

A. No employee of the division, shall have or acquire any pecuniary interest, whether direct or indirect, in this contract or in any part hereof. No officer, employee, designer, attorney, or administrator of or for the Owner who is authorized in such capacity and on behalf of the Owner to exercise any legislative, executive, supervisory or other similar functions in connection with the construction of the project, shall have or acquire any pecuniary interest, whether direct or indirect, in this contract, any material supply contract, subcontract, insurance contract, or any other contract pertaining to the project.

ARTICLE 1.6 - PATENTS AND ROYALTIES

A. The Contractor shall hold and save the Owner and its officers, agents, servants and employees harmless from liabilities of any nature or kind, including cost and expenses, for, or on account of, any patented or unpatented invention, process, article or appliance manufactured or used in the performance of this contract, including its use by the Owner, unless otherwise specifically stipulated in the contract documents.

B. If the Contractor uses any design, device or materials covered by letters, patent or copyright,

the Contractor shall provide for such use by suitable agreement with the Owner of such patented or copyrighted design, device or material. It is mutually agreed and understood, without exception, that the contract prices shall include all royalties or costs arising from the use of such design, device or materials, in any way involved in the work. The Contractor and/or his sureties shall indemnify and save harmless the Owner of the project from any and all claims for infringement by reason of the use of such patented or copyrighted design, device or materials or any trademark or copyright in connection with work agreed to be performed under this contract and shall indemnify the Owner for any cost, expense or damage it may be obliged to pay by reason of such infringement at any time during the prosecution of the work or after completion of the work.

ARTICLE 1.7 - PREFERENCE FOR AMERICAN AND MISSOURI PRODUCTS AND SERVICES

A. By virtue of statutory authority a preference will be given to Missouri labor and to products of mines, forests and quarries of the state of Missouri when they are found in marketable quantities in the state, and all such materials shall be of the best quality and suitable character that can be obtained at reasonable market prices, all as provided for in Section 8.280, Missouri Revised Statutes and Cumulative Supplements.

B. Furthermore, pursuant to Section 34.076 Missouri Revised Statutes and Cumulative Supplements, a preference shall be given to those persons doing business as Missouri firms, corporations, or individuals, or which maintain Missouri offices or places of business, when the quality of performance promised is equal or better and the price quoted is the same or less. In addition, in order for a non-domiciliary bidder to be successful, his bid must be that same percentage lower than a domiciliary Missouri bidder's bid, as would be required for a Missouri bidder to successfully bid in the non-domiciliary state.

C In accordance with the Missouri Domestic Products Procurement Act Section 34.350 RSMo and Cumulative Supplements any manufactured goods or commodities used or supplied in the performance of this contract or any subcontract thereto shall be manufactured, assembled or produced in the United States, unless the specified products are not manufactured, assembled or produced in the United States in sufficient quantities to meet the agency's requirements or cannot be manufactured, assembled or produced in the United States within the necessary time in sufficient quantities to meet the contract requirements, or if obtaining the specified products manufactured, assembled or produced in the United States would increase the cost of this contract for purchase of the product by more than ten percent.

ARTICLE 1.8 - COMMUNICATIONS

A. All notices, requests, instructions, approvals and claims must be in writing and shall be delivered to the Designer and copied to the Construction Representative for the project except as required by Article 1.12 Disputes and Disagreements, or as otherwise specified by the Owner in writing as stated in Section 012600. Any such notice shall be deemed to have been given as of the time of actual receipt.

B. The Contractor shall attend on-site progress and coordination meetings, as scheduled by the Construction Representative, no less than once a month.

C. The Contractor shall ensure that major subcontractors and suppliers shall attend monthly progress meetings as necessary to coordinate the work, and as specifically requested by the Construction Representative.

ARTICLE 1.9 - SEPARATE CONTRACTS AND COOPERATION

A. The Owner reserves the right to let other contracts in connection with this work. The Contractor shall afford other contractors reasonable opportunity for the introduction and storage of their materials and the execution of their work and shall properly connect and coordinate his work with theirs.

B. The Contractor shall consult the drawings for all other contractors in connection with this work. Any work conflicting with the above shall be brought to the attention of the Owner's Representative before the work is performed. If the Contractor fails to do this, and constructs any work which interferes with the work of another contractor, the Contractor shall remove any part so conflicting and rebuild same, as directed by the Owner's Representative at no additional cost to the Owner.

C. Each contractor shall be required to coordinate his work with other contractors so as to afford others reasonable opportunity for execution of their work. No contractor shall delay any other contractor by neglecting to perform contract work at the proper time. If any contractor causes delay to another, they shall be liable directly to that contractor for such delay in addition to any liquidated damages which might be due the Owner.

D. Should the Contractor or project associated subcontractors refuse to cooperate with the instructions and reasonable requests of other Contractors or other subcontractors in the overall

coordinating of the work, the Owner may take such appropriate action and issue directions, as required, to avoid unnecessary and unwarranted delays.

E. Each Contractor shall be responsible for damage done to Owner's or other Contractor's property by him/her or workers in his employ through their fault or negligence.

F. Should a Contractor sustain any damage through any act or omission of any other Contractor having a contract with the Owner, the Contractor so damaged shall have no claim or cause of action against the Owner for such damage, but shall have a claim or cause of action against the other Contractor to recover any and all damages sustained by reason of the acts or omissions of such Contractor. The phrase "acts or omissions" as used in this section shall be defined to include, but not be limited to, any unreasonable delay on the part of any such contractors.

ARTICLE 1.10 - ASSIGNMENT OF CONTRACT

A. No assignment by Contractor of any amount or any part of this contract or of the funds to be received there under will be recognized unless such assignment has had the written approval of the Director and the surety has been given due notice of such assignment and has furnished written consent thereto. In addition to the usual recitals in assignment contracts, the following language must be set forth: "It is agreed that the funds to be paid to the assignee under this assignment are subject to performance by the Contractor of this contract and to claims or liens for services rendered or materials supplied for the performance of the work called for in said contract in favor of all persons, firms or corporations rendering such services or supplying such materials."

ARTICLE 1.11 - INDEMNIFICATION

A. Contractor agrees to indemnify and save harmless Owner and its respective commissioners, officers, officials, agents, consultants and employees and Designer, their agents, servants and employees, from and against any and all liability for damage arising from injuries to persons or damage to property occasioned by any acts or omissions of Contractor, any subcontractors, agents, servants or employees, including any and all expense, legal or otherwise, which may be incurred by Owner or Designer, its agents, servants or employees, in defense of any claim, action or suit.

B. The obligations of the Contractor under this paragraph shall not extend to the liability of the Designer, his agents or employees, arising out of (1) the preparation or approval of maps, drawings, opinions, reports, surveys, contract changes, design or specifications, or (2) giving of or the failure to give directions or instructions by the Designer, his agents or employees as required by this contract documents provided such giving or failure to give is the primary cause of the injury or damage.

ARTICLE 1.12 - DISPUTES AND DISAGREEMENTS

A. It is hereby expressly agreed and understood that in case any controversy or difference of opinion arises during construction, best efforts will be given to resolution at the field level. Should those efforts be unsuccessful, the Contractor has the right to appeal in writing, the decision of the Director's Designee to the Director at Room 730 Truman Building, P.O. Box 809, Jefferson City, Missouri 65102. The decision of the Director shall be final and binding on all parties.

ARTICLE 2 -- OWNER/DESIGNER RESPONSIBILITIES

A. The Owner shall give all orders and directions contemplated under this contract relative to the execution of the work. During progress of work the Owner will be represented at the project site by the Construction Representative and/or Designer, whose responsibilities are to see that this contract is properly fulfilled.

B. The Owner shall at all times have access to the work whenever it is in preparation or progress. The Contractors shall provide proper facilities for such access and for inspection and supervision.

C. All materials and workmanship used in the work shall be subject to the inspection of the Designer and Construction Representative, and any work which is deemed defective shall be removed, rebuilt or made good immediately upon notice. The cost of such correction shall be borne by the Contractor. Contractor shall not be entitled to an extension of the contract completion date in order to remedy defective work. All rejected materials shall be immediately removed from the site of the work.

D. If the Contractor fails to proceed at once with the correction of rejected defective materials or workmanship, the Owner may, by separate contract or otherwise, have the defects remedied or rejected. Materials removed from the site and charge the cost of the same against any monies which may be due the Contractor, without prejudice to any other rights or remedies of the Owner.

E. Failure or neglect on the part of Owner to observe faulty work, or work done which is not in accordance with the drawings and specifications shall not relieve the Contractor from responsibility

for correcting such work without additional compensation.

F. The Owner shall have the right to direct the Contractor to uncover any completed work.

1. If the Contractor fails to adequately notify the Construction Representative and/or Designer of an inspection as required by the Contract Documents, the Contractor shall, upon written request, uncover the work. The Contractor shall bear all costs associated with uncovering and again covering the work exposed.

2. If the Contractor is directed to uncover work, which was not otherwise required by the Contract Documents to be inspected, and the work is found to be defective in any respect, no compensation shall be allowed for this work. If, however, such work is found to meet the requirements of this contract, the actual cost of labor and material necessarily involved in the examination and replacement plus 10% shall be allowed the Contractor.

G. The Designer shall give all orders and directions contemplated under this contract relative to the scope of the work and shall give the initial interpretation of the contract documents.

H. The Owner may file a written notice to the Contractor to dismiss immediately any subcontractors, project managers, superintendents, foremen, workers, watchmen or other employees whom the Owner may deem incompetent, careless or a hindrance to proper or timely execution of the work. The Contractor shall comply with such notice as promptly as practicable without detriment to the work or its progress.

I. If in the Owner's judgment it becomes necessary at any time to accelerate work, when ordered by the Owner in writing, the Contractor shall redirect resources to such work items and execute such portions of the work as may be required to complete the work within the current approved contract schedule.

ARTICLE 3 -- CONTRACTOR RESPONSIBILITIES

ARTICLE 3.1 -- ACCEPTABLE SUBSTITUTIONS

A. The Contractor may request use of any article, device, product, material, fixture, form or type of construction which in the judgment of the Owner and Designer is equal in all respects to that named. Standard products of manufacturers other than those specified will be accepted when, prior to the ordering or use thereof, it is proven to the satisfaction of the Owner and Designer that they are equal in design, strength, durability, usefulness and convenience for the purpose intended.

B. Any changes required in the details and dimensions indicated on the drawings for the substitution of products other than those specified shall be properly made at the expense of the Contractor requesting the substitution or change.

C. The Contractor shall submit a request for such substitutions in writing to the Owner and Designer within twenty (20) working days after the date of the "Notice to Proceed." Thereafter no consideration will be given to alternate forms of accomplishing the work. This Article does not preclude the Owner from exercising the provisions of Article 4 hereof.

D. Any request for substitution by the Contractor shall be submitted in accordance with SECTION 002113 - INSTRUCTIONS TO BIDDERS.

E. When a material has been approved, no change in brand or make will be permitted unless:

1. Written verification is received from the manufacturer stating they cannot make delivery on the date previously agreed, or

2. Material delivered fails to comply with contract requirements.

ARTICLE 3.2 -- SUBMITTALS

A. The Contractor's submittals must be submitted with such promptness as to allow for review and approval so as not to cause delay in the work. The Contractor shall coordinate preparation and processing of submittals with performance of construction activities.

Coordinate each submittal with fabrication, purchasing, testing, delivery, other submittals, and related activities that require sequential activity.

Submit four (4) copies to the Designer and additional copies as required for the subcontractors and material suppliers. Also provide copies to meet the requirements for maintenance manuals.

B. All subcontractors' shop drawings and schedules shall be submitted by the Contractor and shall bear evidence that Contractor has received, reviewed, and approved them. Any shop drawings and schedules submitted without this evidence will be returned to the Contractor for resubmission.

C. The Contractor shall include with the shop drawing, a letter indicating any and all deviations from the drawings and/or specifications. Failure to notify the Designer of such deviations will be grounds for subsequent rejection of the related work or materials. If, in the opinion of the Designer, the deviations are not acceptable, the Contractor will be required to furnish the item as specified and indicated on the drawings.

D. The Designer shall check shop drawings and schedules with reasonable promptness and approve them only if they conform to the design concept of the project and comply with the information given in the contract documents. The approval shall not relieve the Contractor from the responsibility to comply with the drawings and specifications, unless the Contractor has called the Designer's attention to the deviation, in writing, at the time of submission and the Designer has knowingly approved thereof. An approval of any such modification will be given only under the following conditions:

1. It is in the best interest of the Owner
2. It does not increase the contract sum and/or completion time
3. It does not deviate from the design intent
4. It is without prejudice to any and all rights under the surety bond.

E. No extension of time will be granted because of the Contractor's failure to submit shop drawings and schedules in ample time to allow for review, possible resubmission, and approval. Fabrication of work shall not commence until the Contractor has received approval. The Contractor shall furnish prints of approved shop drawings and schedules to all subcontractors whose work is in any way related to the work under this contract. Only prints bearing this approval will be allowed on the site of construction

F. The Contractor shall maintain a complete file on-site of approved shop drawings available for use by the Construction Representative.

ARTICLE 3.3 – AS-BUILT DRAWINGS

A. The Contractor shall update a complete set of the construction drawings, shop drawings and schedules of all work monthly by marking changes, and at the completion of their work (prior to submission of request for final payment) note all changes and turn the set over to the Construction Representative. The updates shall show all addenda, all field changes that were made to adapt to field conditions, changes resulting from contract changes or supplemental instructions, and all locations of structures, buried installations of piping, conduit, and utility services. All buried and concealed items both inside and outside shall be accurately located as to depth and referenced to permanent features such as interior or exterior wall faces and dimensions shall be given in a neat and legible manner in a contrasting colored pencil or ink. If approved by the Designer, an electronic file format may be provided.

ARTICLE 3.4 – GUARANTY AND WARRANTIES

A. General Guaranty

1. Neither the final certificate of payment nor any provision in the contract documents nor partial use or occupancy of the premises by the Owner shall constitute an acceptance of work not done in accordance with contract requirements.
2. The Contractor or surety shall remedy any defects in the work and pay for any damage to property resulting there from which shall appear within a period of one (1) year from the date of substantial completion unless a longer period is otherwise specified or a differing guaranty period has been established in the substantial completion certificate. The Owner will give notice of observed defects with reasonable promptness.
3. In case of default on the part of the Contractor in fulfilling this part of this contract, the Owner may correct the work or repair the damage and the cost and expense incurred in such event shall be paid by or recoverable from the Contractor or surety.
4. The work will be free from defects not inherent in the quality required or permitted, and that the Work will conform to the requirements of the Contract Documents. Work not conforming to these requirements, including substitutions not properly approved and authorized, may be considered defective. The Contractor's guaranty excludes remedy for damage or defect caused by abuse, modifications not executed by the Contractor, improper or insufficient maintenance, improper operation, or normal wear and tear under normal usage. If required by the Owner, the Contractor shall furnish satisfactory evidence as to the kind and quality of materials and equipment

B. Extended Warranty

Manufacturer's certificates of warranty shall be obtained for all major equipment. Warranty shall be obtained for at least one year. Where a longer period is offered at no additional cost or called for in the specific equipment specifications, the longer period shall govern.

ARTICLE 3.5 -- OPERATION AND MAINTENANCE MANUALS

A. Immediately after equipment submittals are approved and no later than ten (10) working days prior to the substantial completion inspection, the Contractor shall provide to the Designer three (3)

copies of operating instructions and service manuals, containing the following:

1. Start-up and Shut-down Procedures: Provide a step-by-step write up of all major equipment. When manufacturer's printed start-up, trouble shooting and shut-down procedures are available; they may be incorporated into the operating manual for reference.
2. Operating Instructions: Written operating instructions shall be included for the efficient and safe operation of all equipment.
3. Equipment List: List of all major equipment as installed shall be prepared to include model number, capacities, flow rate, name place data, shop drawings and air and water balance reports.
4. Service Instructions: Provide the following information for all pieces of equipment.
   a. Recommended spare parts including catalog number and name of local supplier or factory representative.
   b. Belt sizes, types, and lengths.
   c. Wiring diagrams.
5. Manufacturer's Certificate of Warranty as described in Article 3.4.
6. Prior to the final payment, furnish to the Designer three (4) copies of parts catalogs for each piece of equipment furnished by him/her on the project with the components identified by number for replacement ordering.

B. Submission of operating instructions shall be done in the following manner.

1. Manuals shall be in quadruplicate, and all materials shall be bound into volumes of standard 8½" x 11" hard binders. Large drawings too bulky to be folded into 8½" x 11" shall be separately bound or folded and in envelopes, cross referenced and indexed with the manuals.
2. The manuals shall identify project name, project number, and include the name and address of the Contractor, subcontractors and manufacturers who were involved with the activity described in that particular manual.
3. Internally subdivide the binder contents with permanent page dividers, logically organized with tab titles clearly printed under reinforced laminated plastic tabs.
4. Contents: Prepare a Table of Contents for each volume, with each product or system description identified.

ARTICLE 3.6 – OTHER CONTRACTOR RESPONSIBILITIES

A. The Contractor shall keep on site, during progress of the work, a competent superintendent satisfactory to the Construction Representative. The superintendent shall represent the Contractor and all agreements made by the superintendent shall be binding. The superintendent shall carefully study and compare all drawings, specifications and other instructions and shall promptly notify the Construction Representative and Designer, in writing, any error, inconsistency or omission which may be discovered. The superintendent shall coordinate all work on the project. Any change of the superintendent shall be approved by the Construction Representative.

B. Contractor shall, at all times, enforce strict discipline and good order among his employees, and shall not employ on the work any unfit person or anyone not skilled in the work assigned to him/her.

C. The Contractor shall supply sufficient labor, material, plant and equipment and pay when due any laborer, subcontractor or supplier for supplies furnished and otherwise prosecute the work with diligence to prevent work stoppage and insure completion thereof within the time specified.

D. The Contractor and each of his subcontractors shall submit to the Construction Representative, through the Designer such schedules of quantities and costs, progress schedules, payrolls, reports, estimates, records and other data as the Owner may request concerning work performed or to be performed under this contract.

E. The Contractor, subcontractors, and material suppliers shall upon written request, give the Owner access to all time cards, material invoices, payrolls, estimates, profit and loss statements, and all other direct or indirect costs related to this work.

F. The Contractor shall be responsible for laying out all contract work such as layout of architectural, structural, mechanical and electrical work, which shall be coordinated with layouts of subcontractors for general construction work. The Contractor is also responsible for unloading, uncrating and handling of all materials and equipment to be erected or placed by him/her, whether furnished by Contractor or others. No extra charges or compensation will be allowed as a result of failure to verify dimensions before ordering materials or fabricating items.

G. The Contractor must notify the Construction Representative at least one working day before

placing concrete or burying underground utilities, pipelines, etc.

H. Contractors shall prearrange time with the Construction Representative for the interruption of any facility operation. Unless otherwise specified in these documents, all connections, alterations or relocations as well as all other portions of the work will be performed during normal working hours.

I. The Contractor shall coordinate all work so there will not be prolonged interruptions of existing equipment operation. Any existing plumbing, heating, ventilating, air conditioning or electrical disconnections necessary for the project, which affect portions of this construction or building or any other building must be scheduled with the Construction Representative to minimize or avoid any disruption of facility operations. In no case, unless previously approved in writing by the Construction Representative, shall utilities be left disconnected at the end of a work day or over a weekend. Any interruption of utilities either intentionally or accidentally shall not relieve the Contractor responsible for the interruption from the responsibility to repair and restore the utility to normal service. Repairs and restoration shall be made before the workers responsible for the repair and restoration leave the job.

J. Contractors shall limit operations and storage of materials to the area within the project, except as necessary to connect to existing utilities, and shall not encroach on neighboring property. The Contractor shall be responsible for repair of their damage to property on or off the project site occurring during construction of project. All such repairs shall be made to the satisfaction of the property owner.

K. Unless otherwise permitted, all materials shall be new and both workmanship and materials shall be of the best quality.

L. Unless otherwise provided and stipulated within these specifications, the Contractor shall furnish, construct, and/or install and pay for materials, devices, mechanisms, equipment, all necessary personnel, utilities including, but not limited to water, heat, light and electric power, transportation services, applicable taxes of every nature, and all other facilities necessary for the proper execution and completion of the work.

M. Contractor shall carefully examine the plans and drawings and shall be responsible for the proper fitting of his material, equipment and apparatus into the building.

N. The Contractor or subcontractors shall not overload, or permit others to overload, any part of any structure during the performance of this contract.

O. All temporary shoring, bracing, etc., required for the removal of existing work and/or for the installation of new work shall be included in this contract. The Contractor shall make good, at no cost to the Owner, any damage caused by improper support or failure of shoring in any respect. Each Contractor shall be responsible for shoring required to protect his work or adjacent property and improvements of Owner and shall be responsible for shoring or for giving written notice to adjacent property owners. Shoring shall be removed only after completion of permanent supports.

P. The Contractor shall provide at the proper time such material as is required for support of the work. If openings are required, whether shown on drawings or not, the Contractor shall see that they are properly constructed.

Q. During the performance of work the Contractor shall be responsible for providing and maintaining warning signs, lights, signal devices, barricades, guard rails, fences and other devices appropriately located on site which will give proper and understandable warning to all persons of danger of entry onto land, structure or equipment.

R. The Contractor shall be responsible for protection, including weather protection, and proper maintenance of all equipment and materials.

S. The Contractor shall be responsible for care of the finished work and shall protect same from damage or defacement until substantial completion by the Owner. If the work is damaged by any cause, the Contractor shall immediately begin to make repairs in accordance with the drawings and specifications. Contractor shall be liable for all damage or loss unless attributable to the acts or omissions of the Owner or Designer. Any claim for reimbursement shall be submitted in accordance with Article 4. After substantial completion the Contractor will only be responsible for damage resulting from acts or omissions of the Contractor or subcontractors through final warranty.

T. In the event the Contractor encounters an unforeseen hazardous material, the Contractor shall immediately stop work in the area affected and report the condition to the Owner and Designer in writing. The Contractor shall not be required, pursuant to Article 4, to perform, any work relating to hazardous materials.

U. In an emergency affecting safety of persons or property, the Contractor shall act, at the Contractor's discretion, to prevent threatened damage, injury or loss. Additional compensation

or extension of time claimed by the Contractor on account of an emergency shall be determined as provided in Article 4.

V. Before commencing work, Contractors shall confer with the Construction Representative and facility representative and review any facility rules and regulations which may affect the conduct of the work.

W. Project signs will only be erected on major projects and only as described in the specifications. If no sign is specified, none shall be erected.

ARTICLE 3.7 -- SUBCONTRACTS

A. Subcontractor assignments as identified in the bid form shall not be changed without written approval of the Owner. The Owner will not approve changes of a listed subcontractor unless the Contractor documents, to the satisfaction of the Owner that the subcontractor cannot or will not perform the work as specified.

B. The Contractor is fully responsible to the Owner for the acts and omissions of all subcontractors and of persons either directly or indirectly employed by them.

C. Every subcontractor shall be bound by the applicable terms and provisions of these contract documents, but no contractual relationship shall exist between any subcontractor and the Owner unless the right of the Contractor to proceed with the work is suspended or this contract is terminated as herein provided, and the Owner in writing elects to assume the subcontract.

D. The Contractor shall upon receipt of "Notice to Proceed" and prior to submission of the first payment request, notify the Designer and Construction Representative in writing of the names of any subcontractors to be used in addition to those identified in the bid form and all major material suppliers proposed for all parts of the work.

ARTICLE 4 -- CHANGES IN THE WORK

4.1 CHANGES IN THE WORK

A. The Construction Representative, without giving notice to the surety and without invalidating this contract, may order extra work or make changes by altering, adding to or deducting from the work, this contract sum being adjusted accordingly. All such work shall be executed under the conditions of the original contract. A claim for extension of time caused by any change must be adjusted at the time of ordering such change. No future request for time will be considered.

B. Each Contract Change shall include all costs required to perform the work including all labor, material, equipment, overheads and profit, delay, disruptions, or other miscellaneous expenses. No subsequent requests for additional compensation including claims for delay, disruption, or reduced efficiency as a result of each change will be considered. Values from the Schedule of Values will not be binding as a basis for additions to or deductions from the contract price.

C. The amount of any adjustment in this contract price for authorized changes shall be agreed upon before such changes become effective and shall be determined, through submission of a request for proposal, as follows:

1. By an acceptable fixed price proposal from the Contractor. Breakdowns shall include all takeoff sheets of each Contractor and subcontractor. Breakdown shall include a listing of each item of material with unit prices and number of hours of labor for each task. Labor costs per hour shall be included with labor burden identified, which shall be not less than the prevailing wage rate, etc. Overhead and profit shall be shown separately for each subcontractor and the Contractor.

2. By a cost-plus-fixed-fee (time and material) basis with maximum price, total cost not to exceed said maximum. Breakdown shall include a listing of each item of material with unit prices and number of hours of labor for each task. Labor costs per hour shall be included with labor burden identified, which shall be not less than the prevailing wage rate, etc. Overhead and profit shall be shown separately for each subcontractor and the Contractor.

3. By unit prices contained in Contractor's original bid form and incorporated in the construction contract.

D. Overhead and Profit on Contract Changes shall be applied as follows:

1. The overhead and profit charge by the Contractor and all subcontractors shall be considered to include, but is not limited to: incidental job burdens, small truck (under 1 ton) expense, mileage, small hand tools, warranty costs, company benefits and general office overhead. Project supervision including field supervision and job site office expense shall be considered a part of overhead and profit unless a compensable time extension is granted.

2. The percentages for overhead and profit charged on Contract Changes shall be negotiated, and may vary according to the nature, extent, and complexity of the work

involved. However, the overhead and profit for the Contractor or subcontractor actually performing the work shall not exceed 14%. When one or more tiers of subcontractors are used, in no event shall any Contractor or subcontractor receive as overhead and profit more than 3% of the cost of the work performed by any of his subcontractors. In no case shall the total overhead and profit paid by the Owner on any Contract Changes exceed twenty percent (20%) of the cost of materials, labor and equipment (exclusive of Contractor or any Subcontractor overhead and profit) necessary to put the contract change work in place.

3. The Contractor will be allowed to add the cost of bonding and insurance to their cost of work. This bonding and insurance cost shall not exceed 2% and shall be allowed on the total cost of the added work, including overhead and profit.

4. On proposals covering both increases and decreases in the amount of this contract, the application of overhead and profit shall be on the net change in the cost of the work.

5. The percentage for overhead and profit to be credited to the Owner on Contract Changes that are solely decreases in the quantity of work or materials shall be negotiated, and may vary according to the nature, extent and complexity of the work involved, but in no case shall be less than ten percent (10%). If the percentage for overhead and profit charged for work added by Contract Changes for this contract has been negotiated to less than 10%, the negotiated rate shall then apply to credits as well.

E. No claim for an addition to this contract sum shall be valid unless authorized as aforesaid in writing by the Owner. In the event that none of the foregoing methods are agreed upon, the Owner may order the Contractor to perform work on a time and material basis. The cost of such work shall be determined by the Contractor's actual labor and material cost to perform the work plus overhead and profit as outlined herein. The Designer and Construction Representative shall approve the Contractor's daily time and material invoices for the work involved.

F. If the Contractor claims that any instructions involve extra cost under this contract, the Contractor shall give the Owner's Representative written notice thereof within a reasonable time after the receipt of such instructions, and in any event before proceeding to execute the work. No such claim shall be valid unless so made and authorized by the Owner, in writing.

G. In an emergency affecting the safety of life or of the structure or of adjoining property, the Contractor, without special instruction or authorization from the Construction Representative, is hereby permitted to act at their discretion to prevent such threatened loss or injury. The Contractor shall submit a claim for compensation for such emergency work in writing to the Owner's Representative.

ARTICLE 4.2 – CHANGES IN COMPLETION TIME

A. Extension of the number of work days stipulated in the Contract for completion of the work with compensation may be made when:

1. The contractor documents that proposed Changes in the work, as provided in Article 4.1, extends construction activities critical to contract completion date, OR

2. The Owner suspends all work for convenience of the Owner as provided in Article 7.3, OR

3. An Owner caused delay extends construction activities critical to contract completion (except as provided elsewhere in these General Conditions). The Contractor is to review the work activities yet to begin and evaluate the possibility of rescheduling the work to minimize the overall project delay.

B. Extension of the number of work days stipulated in the Contract for completion of the work <u>without</u> compensation may be made when:

1. Weather-related delays occur, subject to provisions for the inclusion of a specified number of "bad weather" days when provided for in Section 012100-Allowances, OR

2. Labor strikes or acts of God occur, OR

3. The work of the Contractor is delayed on account of conditions which were beyond the control of the Contractor, subcontractors or suppliers, and were not the result of their fault or negligence.

C. No time extension or compensation will be provided for delays caused by or within the control of the Contractor, subcontractors or suppliers and for concurrent delays caused by the Owner.

D. The Contractor shall notify the Owner promptly of any occurrence or conditions which in the Contractor's opinion results in a need for an extension of time. The notice shall be in writing and shall include all necessary supporting materials with details of any resultant costs and be submitted in time to permit full investigation and

evaluation of the Contractor's claim. The Owner shall promptly acknowledge the Contractor's notice and, after recommendation from the Owner's Representative and/or Designer, shall provide a decision to the Contractor. Failure on the part of the Contractor to provide such notice and to detail the costs shall constitute a waiver by the Contractor of any claim. Requests for extensions of time shall be for working days only.

ARTICLE 5 - CONSTRUCTION AND COMPLETION

ARTICLE 5.1 – CONSTRUCTION COMMENCEMENT

A. Upon receipt of the "Intent to Award" letter, the Contractor must submit the following properly executed instruments to the Owner:

1. Contract;
2. Performance/payment bond as described in Article 6.1;
3. Certificates of Insurance, or the actual policies themselves, showing that the Contractor has obtained the insurance coverage required by Article 6.2.
4. Written Affirmative Action Plans as required in Article 1.4.

Above referenced items must be received by the Owner within ten (10) working days after the effective date of the contract. If not received, the Owner may treat the failure to timely submit them as a refusal by the Contractor to accept a contract for this work and may retain as liquidated damages the Contractor's bid bond, cashier's check or certified check as provided in the Instructions to Bidders. Upon receipt the Owner will issue a "Notice to Proceed" with the work to the Contractor.

B. Within the time frame noted in Section 013200 - Schedules, following receipt of the "Notice to Proceed", the Contractor shall submit to the Owner a progress schedule and schedule of values, showing activities through the end of the contract period. Should the Contractor not receive written notification from the Owner of the disapproval of the schedule of values within fifteen (15) working days, the Contractor may consider it approved for purpose of determining when the first monthly Application and Certification for Payment may be submitted.

C. The Contractor may commence work upon receipt of the Division of Facilities Management, Design and Construction's "Notice to Proceed" letter. Contractor shall prosecute the work with faithfulness and energy, and shall complete the entire work on or before the completion time stated in the contract documents or pay to the Owner the damages resulting from the failure to timely complete the work as set out within Article 5.4.

ARTICLE 5.2 -- PROJECT CONSTRUCTION

A. Each Contractor shall submit for the Owner's approval, in reproducible form, a progress schedule showing the rate of progress and the order of the work proposed to carry on various phases of the project. The schedule shall be in conformance with the requirements outlined in Section 013200 – Schedules.

B. Contractor shall employ and supply a sufficient force of workers, material, and equipment and shall pay when due, any worker, subcontractor or supplier and otherwise prosecute the work with such diligence so as to maintain the rate of progress indicated on the progress schedule, prevent work stoppage, and insure completion of the project within the time specified.

ARTICLE 5.3 -- PROJECT COMPLETION

A. Substantial Completion. A Project is substantially complete when construction is essentially complete and work items remaining to be completed can be done without interfering with the Owner's ability to use the Project for its intended purpose.

1. Once the Contractor has reached what they believe is Substantial Completion, the Contractor shall notify the Designer and the Construction Representative of the following:
   a. That work is essentially complete with the exception of certain listed work items. The list shall be referred to as the "Contractor's Punch."
   b. That all Operation and Maintenance Manuals have been assembled and submitted in accordance with Article 3.5A.
   c. That the Work is ready for inspection by the Designer and Construction Representative. The Owner shall be entitled to a minimum of ten working days notice before the inspection shall be performed.
2. If the work is acceptable, the Owner shall issue a Certificate of Substantial Completion, which shall set forth the responsibilities of the Owner and the Contractor for utilities, security, maintenance, damage to the work and risk of loss. The Certificate shall also identify those remaining items of work to be

performed by the Contractor. All such work items shall be complete within 30 working days of the date of the Certificate, unless the Certificate specifies a different time. If the Contractor shall be required to perform tests that must be delayed due to climatic conditions, it is understood that such tests and affected equipment will be identified on the Certificate and shall be accomplished by the Contractor at the earliest possible date. Performance of the tests may not be required before Substantial Completion can be issued. The date of the issuance of the Certificate of Substantial Completion shall determine whether or not the work was completed within the contract time and whether or not Liquidated Damages are due.

3. If the work is not acceptable, and the Owner does not issue a Certificate of Substantial Completion, the Owner shall be entitled to charge the Contractor with the Designer's and Owner's costs of re-inspection, including time and travel.

B. Partial Occupancy. Contractor agrees that the Owner shall be permitted to occupy and use any completed or partially completed portions of the Project, when such occupancy and use is in the Owner's best interest. Owner shall notify Contractor of its desire and intention to take Partial Occupancy as soon as possible but at least ten (10) working days before the Owner intends to occupy. If the Contractor believes that the portion of the work the Owner intends to occupy is not ready for occupancy, the Contractor shall notify the Owner immediately. The Designer shall inspect the work in accordance with the procedures above. If the Contractor claims increased cost of the project or delay in completion as a result of the occupancy, he shall notify the Owner immediately but in all cases before occupancy occurs.

C. Final Completion. The Project is finally complete when the Certificate of Substantial Completion has been issued and all work items identified therein as incomplete have been completed, and when all administrative items required by the contract have been completed. Final Completion entitles the Contractor to payment of the outstanding balance of the contract amount including all change orders and retainage. Within five (5) working days of the date of the Certificate of Substantial Completion, the Contractor shall identify the cost to complete any outstanding items of work. The Designer shall review the Contractor's estimate and either approve it or provide an independent estimate for all such items. If the Contractor fails to complete the remaining items within the time specified in the Certificate, the Owner may terminate the contract and go to the surety for project completion in accordance with Article 7.2 or release the contract balance to the Contractor less 150% of the approved estimate to complete the outstanding items. Upon completion of the outstanding items, when a final cost has been established, any monies remaining shall be paid to the Contractor. Failure to complete items of work does not relieve the Contractor from the obligation to complete the administrative requirements of the contract, such as the provisions of Article 5.3 FAILURE TO COMPLETE ALL ITEMS OF WORK UNDER THE CONTRACT SHALL BE CONSIDERED A DEFAULT AND BE GROUNDS FOR CONTRACT TERMINATION AND DEBARMENT.

D. Liquidated Damages. Contractor agrees that the Owner may deduct from the contract price and retain as liquidated damages, and not as penalty or forfeiture, the sum stipulated in this contract for each work day after the Contract Completion Day on which work is not Substantially Complete. Assessment of Liquidated Damages shall not relieve the Contractor or the surety of any responsibility or obligation under the Contract. In addition, the Owner may, without prejudice to any other rights, claims, or remedies the Owner may have including the right to Liquidated Damages, charge the Contractor for all additional expenses incurred by the Owner and/or Designer as the result of the extended contract period through Final Completion. Additional Expenses shall include but not be limited to the costs of additional inspections.

E. Early Completion. The Contractor has the right to finish the work before the contract completion date; however, the Owner assumes no liability for any hindrances to the Contractor unless Owner caused delays result in a time extension to the contract completion date. The Contractor shall not be entitled to any claims for lost efficiencies or for delay if a Certificate of Substantial Completion is given on or before the Contract Completion Date.

ARTICLE 5.4 -- PAYMENT TO CONTRACTOR

A. Payments on account of this contract will be made monthly in proportion to the work which has been completed. Request for payment must be submitted on the Owner's forms. No other pay request will be processed. Supporting breakdowns must be in the same format as Owner's forms and must provide the same level of detail. The Designer will, within 5 working days from receipt of the contractor's request for payment either issue a Certificate for Payment to the Owner, for such amount as the Designer determines is properly due, or notify the Contractor in writing of reasons for withholding a Certificate. The Owner shall make

payment within 30 calendar days after the "Application and Certification for Payment" has been received and certified by the Designer. The following items are to be attached to the contractor's pay request:

1. Updated construction schedule
2. Certified payrolls consisting of name, occupation and craft, number of hours worked and actual wages paid for each individual employee, of the Contractor and all subcontractors working on the project

B. The Owner shall retain 5 percent of the amount of each such payment application, except as allowed by Article 5.4, until final completion and acceptance of all work covered by this contract.

C. Each payment made to Contractor shall be on account of the total amount payable to Contractor and all material and work covered by paid partial payment shall thereupon become the sole property of Owner. This provision shall not be construed as relieving Contractor from sole responsibility for care and protection of materials and work upon which payments have been made or restoration of any damaged work or as a waiver of the right of Owner to require fulfillment of all terms of this contract.

D. Materials delivered to the work site and not incorporated in the work will be allowed in the Application and Certification for Payment on the basis of one hundred (100%) percent of value, subject to the 5% retainage providing that they are suitably stored on the site or in an approved warehouse in accordance with the following requirements:

1. Material has previously been approved through submittal and acceptance of shop drawings conforming to requirements of Article 3.2 of General Conditions.
2. Delivery is made in accordance with the time frame on the approved schedule.
3. Materials, equipment, etc., are properly stored and protected from damage and deterioration and remain so - if not, previously approved amounts will be deleted from subsequent pay applications.
4. The payment request is accompanied by a breakdown identifying the material equipment, etc. in sufficient detail to establish quantity and value.

E. The Contractor shall be allowed to include in the Application and Certification for Payment, one hundred (100%) of the value, subject to retainage, of major equipment and material stored off the site if all of the following conditions are met:

1. The request for consideration of payment for materials stored off site is made at least 15 working days prior to submittal of the Application for Payment including such material. Only materials inspected will be considered for inclusion on Application for Payment requests.
2. Materials stored in one location off site are valued in excess of $25,000.
3. That a Certificate of Insurance is provided indicating adequate protection from loss, theft conversion or damage for materials stored off site. This Certificate shall show the State of Missouri as an additional insured for this loss.
4. The materials are stored in a facility approved and inspected, by the Construction Representative.
5. Contractor shall be responsible for, Owner costs to inspect out of state facilities, and any delays in the completion of the work caused by damage to the material or for any other failure of the Contractor to have access to this material for the execution of the work.

F. The Owner shall determine the amount, quality and acceptability of the work and materials which are to be paid for under this contract. In the event any questions shall arise between the parties, relative to this contract or specifications, determination or decision of the Owner or the Construction Representative and the Designer shall be a condition precedent to the right of the Contractor to receive any money or payment for work under this contract affected in any manner or to any extent by such question.

G. Payments Withheld: The Owner may withhold or nullify in whole or part any certificate to such extent as may be necessary to protect the Owner from loss on account of:

1. Defective work not remedied. When a notice of noncompliance is issued on an item or items, corrective action shall be undertaken immediately. Until corrective action is completed, no monies will be paid and no additional time will be allowed for the item or items. The cost of corrective action(s) shall be borne by the Contractor.
2. A reasonable doubt that this contract can be completed for the unpaid balance.
3. Failure of the Contractor to update as-built drawings monthly for review by the Construction Representative.
4. Failure of the Contractor to update the construction schedule.

When the Construction Representative is satisfied the Contractor has remedied above deficiencies, payment shall be released.

H. Final Payment: Upon receipt of written notice from the Contractor to the Designer and Project Representative that the work is ready for final inspection and acceptance, the Designer and Project Representative, with the Contractor, shall promptly make such inspection. If the work is acceptable and the contract fully performed, the Construction Representative shall complete a final acceptance report and the Contractor will be directed to submit a final Application and Certification for Payment. If the Owner approves the same, the entire balance shall be due and payable, with the exception of deductions as provided for under Article 5.4.

1. Where the specifications provide for the performance by the Contractor of (certain tests for the purpose of balancing and checking the air conditioning and heating equipment and the Contractor shall have furnished and installed all such equipment in accordance with the specifications, but said test cannot then be made because of climatic conditions, such test shall may be considered as required under the provisions of the specifications, Section 013300 and this contract may be substantial Full payment will not be made until the tests have been made and the equipment and system is finally accepted. If the tests are not completed when scheduled, the Owner may deduct 150% of the value of the tests from the final payment.

2. The final payment shall not become due until the Contractor delivers to the Construction Representative:
   a) A complete file of releases, on the standard form included in the contract documents as "Final Receipt of Payment and Release Form", from subcontractors and material suppliers evidencing payment in full for services, equipment and materials, as the case may require, if the Owner approves, or a consent from the Surety to final payment accepting liability for any unpaid amounts.
   b) An Affidavit of Compliance with Prevailing Wage Law, in the form as included in this contract specifications, properly executed by each subcontractor, and the Contractor
   c) Certified copies of all payrolls
   d) As-built drawings

3. If any claim remains unsatisfied after all payments are made, the Contractor shall refund to the Owner all monies that the latter may be compelled to pay in discharging such a claim including all costs and a reasonable attorney's fee.

4. Missouri statute requires prompt payment from the Owner to the Contractor within thirty calendar days and from the Contractor to his subcontractors within fifteen calendar days. Failure to make payments within the required time frame entitles the receiving party to charge interest at the rate of one and one half percent per month calculated from the expiration of the statutory time period until paid.

5. The value of all unused unit price allowances and/or 150% of the value of the outstanding work items, and/or liquidated damages may be deducted from the final pay request without executing a Contract Change. Any unit price items which exceed the number of units in the contract may be added by Contract Change.

ARTICLE 6 -- INSURANCE AND BONDS

ARTICLE 6.1 -- BOND

A. Contractor shall furnish a performance/payment bond in an amount equal to 100% of the contract price to guarantee faithful performance of the contract and 100% of the contract price to guarantee the payment of all persons performing labor on the project and furnishing materials in connection therewith under this contract as set forth in the standard form of performance and payment bond included in the contract documents. The surety on such bond shall be issued by a surety company authorized by the Missouri Department of Insurance to do business in the state of Missouri.

B. All Performance/Payment Bonds furnished in response to this provision shall be provided by a bonding company with a rating of B+ or higher as established by A.M. Best Company, Inc. in their most recent publication.

ARTICLE 6.2 – INSURANCE

A. The successful Contractor shall procure and maintain for the duration of the contract issued a policy or policies of insurance for the protection of both the Contractor and the Owner and their respective officers, officials, agents, consultants and employees. The Owner requires certification of insurance coverage from the Contractor prior to commencing work.

B. Minimum Scope and Extent of Coverage

1. General Liability

   Commercial General Liability, ISO coverage form number or equivalent CG 00 01 ("occurrence" basis), or I-SO coverage form number CG 00 02, or ISO equivalent.

   If ISO equivalent or manuscript general liability coverage forms are used, minimum coverage will be as follows: Premises/Operations;Independent Contractors; Products/Completed Operations; personal Injury; Broad Form Property Damage including Completed Operations; Broad Form Contractual Liability Coverage to include Contractor's obligations under Article 1.11 Indemnification and any other Special Hazards required by the work of the contract.

2. Automobile Liability

   Business Automobile Liability Insurance, ISO Coverage form number or equivalent CA 00 01 covering automobile liability, code 1 "ANY AUTO".

3. Workers' Compensation and Employer's Liability

   Statutory Workers' Compensation Insurance for Missouri and standard Employer's Liability Insurance, or the authorization to self-insure for such liability from the Missouri Division of Workers' Compensation.

4. Builder's Risk or Installation Floater Insurance

   Insurance upon the work and all materials, equipment, supplies, temporary structures and similar items which may be incident to the performance of the work and located at or adjacent to the site, against loss or damage from fire and such other casualties as are included in extended coverage in broad "All Risk" form, including coverage for Flood and Earthquake, in an amount not less than the replacement cost of the work or this contact price, whichever is greater, with loss payable to Contractor and Owner as their respective interests may appear.

   Contractor shall maintain sufficient insurance to cover the full value of the work and materials as the work progresses, and shall furnish Owner copies of all endorsements. If Builder's Risk Reporting- Form of Endorsement is used, Contractor shall make all reports as required therein so as to keep in force an amount of insurance which will equal the replacement cost of the work, materials, equipment, supplies, temporary structures, and other property covered thereby; and if, as a result of Contractor's failure to make any such report, the amount of insurance so recoverable shall be less than such replacement cost, Contractor's interest in the proceeds of such insurance, if any, shall be subordinated to Owner's interest to the end that Owner may receive full reimbursement for its loss.

C. Minimum Limits of Insurance

   1. General Liability

      Contractor

      $2,000,000 combined single limit per occurrence for bodily injury, personal injury, and property damage

      $2,000,000 annual aggregate

   2. Automobile Liability

      $2,000,000 combined single limit per occurrence for bodily injury and property damage

   3. Workers'Compensation and Employers Liability

      Workers' Compensation limits as required by applicable State Statutes (generally unlimited) and minimum of $1,000,000 limit per accident for Employer's Liability.

      General Liability and Automobile Liability insurance may be arranged under individual policies for the full limits required or by a combination of underlying policies with the balance provided by a form-following Excess or Umbrella Liability policy.

D. Deductibles and Self-Insured Retentions

   All deductibles, co-payment clauses, and self-insured retentions must be declared to and approved by the Owner. The Owner reserves the right to request the reduction or elimination of unacceptable deductibles or self-insured retentions, as they would apply to the Owner, and their respective officers, officials, agents, consultants and employees. Alternatively, the Owner may request Contractor to procure a bond guaranteeing payment of losses and related investigations, claims administration, and defense expenses.

E. Other Insurance Provisions and Requirements

   The respective insurance policies and coverage, as specified below, must contain, or be endorsed to contain the following conditions or provisions:

   1. General Liability

      The Owner, and its respective commissioners, officers, officials, agents, consultants and employees shall be endorsed as additional insured's by ISO form CG 20 26 Additional

Insured - Designated Person or Organization. As additional insured's, they shall be covered as to work performed by or on behalf of the Contractor or as to liability which arises out of Contractor's activities or resulting from the performance of services or the delivery of goods called for by the Contract.

Contractor's insurance coverage shall be primary with respect to all additional insured's. Insurance of self-insurance programs maintained by the designated additional -insured's shall be excess of the Contractor's insurance and shall not contribute with it.

Additionally, the Contractor and Contractor's general liability insurer shall agree to waive all rights of subrogation against the Owner and any of their respective officers, officials, agents, consultants or employees for claims, losses, or expenses which arise out of Contractor's activities or result from the performance of services or the delivery of goods called for by the Contract.

Contractor's failure to comply with the terms and conditions of these insurance policies shall not affect or abridge coverage for the Owner, or for any of their officers, officials, agents, consultants or employees.

2. Automobile Insurance

The Owner, and their respective officers, officials, agents, consultants and employees shall be endorsed as additional insured's by ISO form CG 20 26 - Additional Insured Designated Person or Organization. As additional insured's, they shall be covered as to work performed by or on behalf of the Contractor or as to liability which arises out of Contractor's activities or resulting from the performance of services or the delivery of goods called for by the Contract.

Contractor's insurance coverage shall be primary with respect to all additional insured's. Insurance or self-insurance programs maintained by the designated additional insured's shall be in excess of the Contractor's insurance and shall not contribute with it.

Additionally, the Contractor and Contractor's automobile insurer shall agree to waive all rights of subrogation against the Owner and any of their respective officers, officials, agents, consultants or employees for claims, losses, or expenses which arise out of Contractor's activities or result from the performance of services or the delivery of goods called for by the Contract.

Contractor's failure to comply with the terms and conditions of these insurance policies shall not affect or abridge coverage for the Owner or for any of its officers, officials, agents, consultants or employees.

3. Workers' Compensation/Employer's Liability

Contractor's workers' compensation insurance shall be endorsed with NCCI form WC 00 03 01 A - Alternative Employer Endorsement. The Alternative Employer Endorsement shall designate the Owner as "alternate employers."

4. All Coverages

Each insurance policy required by this section of the Contract shall contain a stipulation, endorsed if necessary, that the Owner will receive a minimum of a thirty (30) calendar day advance notice of any policy cancellation. Ten (10) calendar days advance notice is required for policy cancellation due to non-payment of premium.

F. Insurer Qualifications and Acceptability

Insurance required hereunder shall be issued by an A.M. Best, "B+" rated, Class IX insurance company approved to conduct insurance business in the state of Missouri.

G. Verification of Insurance Coverage

Prior to Owner issuing a Notice to Proceed, the Contractor-shall furnish the Owner with Certificate(s) of Insurance and with any applicable original endorsements evidencing the required insurance coverage. The insurance certificates and endorsements are to be signed by a person authorized by that insurer to bind coverage on its behalf. All certificates and endorsements received by the Owner are subject to review and approval by the Owner. The Owner reserves the right to require certified copies of all required policies at any time. If the scope of this contract will exceed one (1) year - or, if any of Contractor's applicable insurance coverage expires prior to completion of the work or services required under this contract - the Contractor will provide a renewal or replacement certificate before continuing work or services hereunder. If the Contractor fails to provide documentation of required insurance coverage, the Owner may issue a stop work order and no additional contract completion time and/or compensation shall be granted as a result thereof.

ARTICLE 7 – SUSPENSION OR TERMINATION OF CONTRACT

ARTICLE 7.1 - FOR SITE CONDITIONS

A. When conditions at the site of the proposed work are considered by the Owner to be unsatisfactory for prosecution of the work, the Contractor may be ordered in writing to suspend the work or any part thereof until reasonable conditions exist. When such suspension is not due to fault or negligence of the Contractor, time allowed for completion of such suspended work will be extended by a period of time equal to that lost due to delay occasioned by ordered suspension. This will be a no cost time extension.

ARTICLE 7.2 - FOR CAUSE

A. Termination or Suspension for Cause:

1. If the Contractor shall file for bankruptcy, or should make a general assignment for the benefit of the creditors, or if a receiver should be appointed on account of insolvency, or if the contractor should persistently or repeatedly refuse or fail to supply enough properly skilled workers or proper materials, or if the contractor should fail to make prompt payment to subcontractors or for material or labor, or persistently disregard laws, ordinances or the instructions of the Owner, or otherwise be guilty of a substantial violation of any provision of this contract, then the Owner may serve notice on the Contractor and the surety setting forth the violations and demanding compliance with this contract. Unless within ten (10) consecutive calendar days after serving such notice, such violations shall cease and satisfactory arrangements for correction be made, the Owner may suspend the Contractor's right to proceed with the work or terminate this contract.

2. In the event the Owner suspends Contractor's right to proceed with the work or terminates the contract, the Owner may demand that the Contractor's surety take over and complete the work on this contract, after the surety submits a written proposal to the Owner and receives written approval and upon the surety's failure or refusal to do so within ten (10) consecutive calendar days after demand therefore, the Owner may take over the work and prosecute the same to completion by bid or negotiated contract, or the Owner may elect to take possession of and utilize in completing the work such materials, supplies, appliances and plant as may be on the site of the work, and all subcontractors, if the Owner elects, shall be bound to perform their contracts.

B. The Contractor and its surety shall be and remain liable to the Owner for any excess cost or damages occasioned to the Owner as a result of the actions above set forth.

C. The Contractor in the event of such suspension or termination shall not be entitled to receive any further payments under this contract until the work is wholly finished. Then if the unpaid balance under this contract shall exceed all expenses of the Owner as certified by the Director, such excess shall be paid to the Contractor; but, if such expenses shall exceed the unpaid balance as certified by the Director, the Contractor and their surety shall be liable for and shall pay the difference and any damages to the Owner.

D. In exercising Owner's right to secure completion of the work under any of the provisions hereof, the Director shall have the right to exercise Owner's sole discretion as to the manner, methods and reasonableness of costs of completing the work.

E. The rights of the Owner to suspend or terminate as herein provided shall be cumulative and not exclusive and shall be in addition to any other remedy provided by law.

F. The Contractor in the event of such suspension or termination may be declared ineligible for Owner contracts for a minimal period of twelve (12) months. Further, no contract will be awarded to any Contractor who lists in their bid form any subcontractor whose prior performance has contributed, as determined by the Owner, to a breach of a contract. In order to be considered for state-awarded contracts after this period, the Contractor/subcontractor will be required to forward acceptance reports to the Owner regarding successful completion of non-state projects during the intervening twelve (12) months from the date of default. No contracts will be awarded to a subcontractor/Contractor until the ability to perform responsibly in the private sector has been proven to the Owner.

ARTICLE 7.3 -- FOR CONVENIENCE

A. The Owner may terminate or suspend the Contract or any portion of the Work without cause at any time, and at the Owner's convenience. Notification of a termination or suspension shall be in writing and shall be given to the Contractor and their surety. If the Contract is suspended, the notice will contain the anticipated duration of the suspension or the conditions under which work will be permitted to resume. If appropriate, the Contractor will be requested to demobilize and re-mobilize and will be reimbursed time and costs associated with the suspension.

B. Upon receipt of notification, the Contractor shall:

1. Cease operations when directed.
2. Take actions to protect the work and any stored materials.
3. Place no further subcontracts or orders for material, supplies, services or facilities except as may be necessary to complete the portion of the Contract that has not been terminated. No claim for payment of materials or supplies ordered after the termination date shall be considered.
4. Terminate all existing subcontracts, rentals, material, and equipment orders.
5. Settle all outstanding liabilities arising from termination with subcontractors and suppliers.
6. Transfer title and deliver to the Owner, work in progress, completed work, supplies and other material produced or acquire for the work terminated, and completed or partially completed plans, drawings information and other property that, if the Contract had been completed, would be required to be furnished to the Owner.

C. For termination without cause and at the Owner's convenience, in addition to payment for work completed prior to date of termination, the Contractor may be entitled to payment of other documented costs directly associated with the early termination of the contract. Payment for anticipated profit and unapplied overhead will not be allowed.

SECTION 007300 - SUPPLEMENTARY CONDITIONS

1.0 GENERAL:

A. These Supplementary General Conditions clarify, add, delete, or otherwise modify standard terms and conditions of DIVISION 0, BIDDING AND CONTRACTING REQUIREMENTS.

2.0 CONTACTS:

Designer:

Cory Wilson
Olsson
1301 Burlington St,
Kansas City, MO 64116
Telephone: 816-361-1177
Email: cwilson@olsson.com

Project Manager /
Construction Representative:

Michael Smith
Missouri National Guard-CFMO Office, 6819a North Boundary Road,
Jefferson City, MO 65101
Telephone: 573-638-9655
Email: michael.e.smith788.nfg@mail.mil

Contract Specialist:

Paul Girouard
Division of Facilities Management, Design and Construction
301 West High Street, Room 730
Jefferson City, Missouri 65102
Telephone: 573-751-4797
Email: paul.girouard@oa.mo.gov

3.0 NOTICE: ALL BID MATERIALS ARE DUE AT THE TIME OF BID SUBMITTAL. THERE IS NO SECOND SUBMITTAL FOR THIS PROJECT.

4.0 FURNISHING CONSTRUCTION DOCUMENTS:

A. The Owner will furnish the Contractor with approximately 10 complete sets of drawings and specifications at no charge.
B. The Owner will furnish the Contractor with approximately 10 sets of explanatory or change drawings at no charge.
C. The Contractor may make copies of the documents as needed with no additional cost to the Owner.

5.0 ILLEGAL IMMIGRATION REFORM AND IMMIGRANT RESPONSIBILITY ACT

The Contractor understands and agrees that by signing a contract for this project, they certify the following:

A. The Contractor shall only utilize personnel authorized to work in the United States in accordance with applicable federal and state laws. This includes but is not limited to the Illegal Immigration Reform and Immigrant Responsibility Act (IIRIRA) and INA Section 274A.
B. If the Contractor is found to be in violation of this requirement or the applicable laws of the state, federal and local laws and regulations, and if the State of Missouri has reasonable cause to believe that the Contractor has knowingly employed individuals who are not eligible to work in the United States, the state shall have the right to cancel the contract immediately without penalty or recourse and suspend or debar the contractor from doing business with the state.
C. The Contractor agrees to fully cooperate with any audit or investigation from federal, state or local law enforcement agencies.

6.0 SAFETY REQUIREMENTS

Contractor and subcontractors at any tier shall comply with RSMo 292.675 and Article 1.3, E, of Section 007213, General Conditions.

7.0 ENVIRONMENTAL MANAGEMENT SYSTEM (eMS):

The Missouri Army National Guard (MOARNG) has implemented an Environmental Management System (eMS). One of the key components of the eMS is the establishment of an Environmental Policy

that must be communicated to all persons working for or on behalf of the organization including all suppliers and contractors. This policy stresses commitment to compliance with accepted environmental practices, and meeting or exceeding applicable environmental requirements, legal and otherwise. This policy also stresses commitment to waste minimization, pollution prevention, and management of personnel, processes, real property, and materials in a manner to reduce environmental impacts. The policy is available upon request to all parties by contacting the Environmental Management Office at (573) 638-9514.

8.0 OFF-SITE BORROW & SPOIL DEPOSIT SITES FOR FEDERALLY FUNDED PROJECTS:

A. All Federally funded projects which involve off-site borrow and/or off-site spoil deposit sites will require written certification that the site(s) are in compliance with the National Environmental Protection Act and all related applicable Federal and State laws and regulations. If the need for off-site borrow and/or spoil sites is stipulated in the Contract Documents, the following applies:

The Contractor is required to use only the designated site described in the Contract Documents. If another off-site area is proposed by the Contractor, the Contractor must provide written certification to the Division of Facilities Management, Design and Construction Project Representative that the proposed borrow or spoil site has been cleared of environmental concerns in accordance with all applicable Federal and State laws and regulations. These include but are not limited to the following: Clean Water Act; the Endangered Species Act; the National Historic Preservation Act (NHPA) (The site must have Section 106 Clearance); the Farmland Protection Act; Resource Conservation and Recovery Act; Comprehensive Environmental Response; Compensation and Liability Act; and RSMo Chapter 194, Section 194.400, Unmarked Human Burial Sites. Certifications shall include clearance letters and other evidence of coordination with the appropriate regulatory agencies. The Missouri Historic Preservation Office, PO Box 176 Jefferson City, MO 65102, may be contacted to provide assistance with the NHPA and cultural resource issues pertaining to the borrow and spoil site regulations. The Missouri State Historic Preservation Office can provide a list of qualified and certified archaeologists to assist in borrow and spoil site investigations.

If project conditions require off-site borrow or off-site deposit of spoils, the Contractor will be required to provide written certification to the Division of Facilities Management, Design and Construction Project Representative that the proposed borrow or spoil site has been cleared of environmental concerns in accordance with all applicable Federal and State laws and regulations. These include but are not limited to the following: Clean Water Act; the Endangered Species Act; the National Historic Preservation Act (NHPA) (The site must have Section 106 Clearance); the Farmland Protection Act; Resource Conservation and Recovery Act; Comprehensive Environmental Response; Compensation and Liability Act; and RSMo Chapter 194, Section 194.400, Unmarked Human Burial Sites. Certifications shall include clearance letters and other evidence of coordination with the appropriate regulatory agencies. The Missouri Historic Preservation Office, PO Box 176 Jefferson City, MO 65102, may be contacted to provide assistance with the NHPA and cultural resource issues pertaining to the borrow and spoil site regulations. The Missouri State Historic Preservation Office can provide a list of qualified and certified archaeologists to assist in borrow and spoil site investigations.

B. The Owner recognizes that additional time (beyond what is allowed in the Construction Contract) may be required in order to secure the aforementioned certifications and approvals. Should more time be required, the Owner will consider approval of a no-cost time extension contract change. The Contractor will be required to provide documentation that substantiates the need for the time extension.

Missouri
Division of Labor Standards
WAGE AND HOUR SECTION

MICHAEL L. PARSON, Governor

Annual Wage Order No. 26

Section 039
GREENE COUNTY

In accordance with Section 290.262 RSMo 2000, within thirty (30) days after a certified copy of this Annual Wage Order has been filed with the Secretary of State as indicated below, any person who may be affected by this Annual Wage Order may object by filing an objection in triplicate with the Labor and Industrial Relations Commission, P.O. Box 599, Jefferson City, MO 65102-0599. Such objections must set forth in writing the specific grounds of objection. Each objection shall certify that a copy has been furnished to the Division of Labor Standards, P.O. Box 449, Jefferson City, MO 65102-0449 pursuant to 8 CSR 20-5.010(1). A certified copy of the Annual Wage Order has been filed with the Secretary of State of Missouri.

Original Signed by
Taylor Burks, Director
Division of Labor Standards

Filed With Secretary of State: **March 8, 2019**

Last Date Objections May Be Filed: **April 8, 2019**

Prepared by Missouri Department of Labor and Industrial Relations

OCCUPATIONAL TITLE	** Date of Increase	Basic Hourly Rates
Asbestos Worker		$28.59
Boilermaker		$24.94*
Bricklayer		$47.71
Carpenter		$42.40
Lather		
Linoleum Layer		
Millwright		
Pile Driver		
Cement Mason		$29.59
Plasterer		
Communications Technician		$38.42
Electrician (Inside Wireman)		$41.94
Electrician Outside Lineman		$38.51
Lineman Operator		
Lineman - Tree Trimmer		
Groundman		
Groundman - Tree Trimmer		
Elevator Constructor		$24.94*
Glazier		$58.89
Ironworker		$56.55
Laborer		$34.86
General Laborer		
First Semi-Skilled		
Second Semi-Skilled		
Mason		$48.10
Marble Mason		
Marble Finisher		
Terrazzo Worker		
Terrazzo Finisher		
Tile Setter		
Tile Finisher		
Operating Engineer		$40.57
Group I		
Group II		
Group III		
Group III-A		
Group IV		
Group V		
Painter		$33.84
Plumber		$46.13
Pipe Fitter		
Roofer		$38.11
Sheet Metal Worker		$46.31
Sprinkler Fitter		$55.76
Truck Driver		$24.94*
Truck Control Service Driver		
Group I		
Group II		
Group III		
Group IV		

*The Division of Labor Standards received less than 1,000 reportable hours as required by RSMo 290.257.4(b). Public works contracting minimum wage is established for this occupational title using data provided by Missouri Economic Research and Information Center, in accordance with RSMo 290.257.2.

Heavy Construction Rates for
GREENE County

Section 039

OCCUPATIONAL TITLE	** Date of Increase	Basic Hourly Rates
Carpenter		$55.02
Millwright		
Pile Driver		
Electrician (Outside Lineman)		$38.51
Lineman Operator		
Lineman - Tree Trimmer		
Groundman		
Groundman - Tree Trimmer		
Laborer		$40.05
General Laborer		
Skilled Laborer		
Operating Engineer		$47.45
Group I		
Group II		
Group III		
Group IV		
Truck Driver		$43.54
Truck Control Service Driver		
Group I		
Group II		
Group III		
Group IV		

Use Heavy Construction Rates on Highway and Heavy construction in accordance with the classifications of construction work established in 8 CSR 30-3.040(3).

Use Building Construction Rates on Building construction in accordance with the classifications of construction work established in 8 CSR 30-3.040(2).

If a worker is performing work on a heavy construction project within an occupational title that is not listed on the Heavy Construction Rate Sheet, use the rate for that occupational title as shown on the Building Construction Rate Sheet.

*The Division of Labor Standards received less than 1,000 reportable hours as required by RSMo 290.257.4(b). Public works contracting minimum wage is established for this occupational title using data provided by Missouri Economic Research and Information Center, in accordance with RSMo 290.257.2.

OVERTIME
and
HOLIDAYS

OVERTIME

For all work performed on a Sunday or a holiday, not less than twice (2x) the prevailing hourly rate of wages for work of a similar character in the locality in which the work is performed or the public works contracting minimum wage, whichever is applicable, shall be paid to all workers employed by or on behalf of any public body engaged in the construction of public works, exclusive of maintenance work.

For all overtime work performed, not less than one and one-half (1½) the prevailing hourly rate of wages for work of a similar character in the locality in which the work is performed or the public works contracting minimum wage, whichever is applicable, shall be paid to all workers employed by or on behalf of any public body engaged in the construction of public works, exclusive of maintenance work or contractual obligation. For purposes of this subdivision, **"overtime work"** shall include work that exceeds ten hours in one day and work in excess of forty hours in one calendar week; and

A thirty-minute lunch period on each calendar day shall be allowed for each worker on a public works project, provided that such time shall not be considered as time worked.

HOLIDAYS

January first;
The last Monday in May;
July fourth;
The first Monday in September;
November eleventh;
The fourth Thursday in November; and
December twenty-fifth;

If any holiday falls on a Sunday, the following Monday shall be considered a holiday.

SECTION 010000 - SUMMARY OF WORK

PART 1 - GENERAL

1.1 MISCELLANEOUS PROJECT INFORMATION

A. The location of the project:

1. Aviation Classification Repair Activity Depot
   Existing Buildings located at:
   2501 N. Lester Jones Ave.
   Springfield, MO 65803

B. The owner of this building is the following:

1. State of Missouri
   Michael L. Parson, Governor
   Missouri National Guard
   Office of the Adjutant General
   Facilities Management Office
   6301 Militia Drive
   Jefferson City, MO 65101

1.2 BUILDING DESIGNER INFORMATION

A. Architect:

1. Sapp Design Architects
   3750 S. Fremont
   Springfield, MO 65804

B. Civil Engineer:

1. Olsson, Inc.
   550 East St Louis St.
   Springfield, MO 65806

C. MEP and Structural Engineer:

1. Olsson, Inc.
   1301 Burlington St.
   North Kansas City, MO 64116

1.3 SCOPE OF WORK

A. The general scope is to construction a new army readiness center, 2-stories, approximately 43,000 SF, adjacent to the existing AVCRAD facility. This project will adjoin to the phase 3A project scheduled for completion in summer 2020.

B. Various work to be performed shall include any and all items in the following categories:

1. General Requirements
2. Site work, grading, parking lots, utilities, stormwater, etc.
3. General Construction Work
4. Masonry, structural steel, foundations, concrete pathways, concrete base pads, and painting.
5. New envelope systems for walls, roof, glass systems, finishes.
6. Mechanical Work
7. Electrical Work

8. Fire Protection
9. Control and Monitoring Work

C. The Contractor agrees to complete the work under this contract within a maximum time period of 284 working days (or less as dictated by submitted schedule), starting from date Notice Of Intent To Award has been issued.

1.4 DESIGNERS ESTIMATE RANGE:

A. The following is the Designer's estimate range**:**

1. Base bid - $8,240,000.00 - $11,330,000.00
2. Bid Add Alternate #1 - $160,000.00 - $220,000.00
3. Bid Add Alternate #2 - $158,000.00 - $217,000.00
4. Bid Add Alternate #3 - $155,000.00 - $213,000.00
5. Bid Add Alternate #4 - $234,000.00 - $321,000.00

1.5 WORK UNDER OTHER CONTRACTS

A. The following work below is related to this project is being completed under separate contract. This work must be coordinated with but is not included in this contract.

1. Furniture and Systems Furniture Purchase and Installation
2. Kitchen Equipment and Installation
3. Non-affixed equipment, i.e. televisions, audio/visual equipment, whiteboards, etc.

1.6 DUTIES OF THE CONTRACTOR

A. Except as specifically noted, provide and pay for:

1. Labor, materials and equipment
2. Tools, construction equipment and machinery
3. Other facilities and services necessary for proper execution and completion of the work

B. Pay all legally required sales, consumer and use taxes.

C. Unless noted otherwise, secure and pay for, as necessary, the execution and completion of the work as follows:

1. Permits
2. Government fees
3. Licenses
4. Construction easements
5. Rental of adjacent properties

D. Give required notices.

E. Comply with codes, ordinances, rules, regulations, orders and other legal requirements of public authorities which bear on performance of the work.

F. Promptly submit to the Owner's Representative written notice of any observed variance of the Contract Documents from legal requirements. It is not the Contractor's responsibility to make certain these documents comply with applicable codes and regulations.

G. Enforce good order among employees and employ only persons skilled in assigned tasks.

1.7 CONTRACTORS USE OF PREMISES

A. General: Limit use of the premises to construction activities in areas indicated; allow for Owner occupancy and use by the public.

1. Contractor shall be limited to areas of work only, which include vestibules, main lobbies, electrical rooms, and conference room.

B. Confine operations to areas as required by laws, ordinances, permits, and within Contract limits indicated. Portions of the site beyond areas in which construction operations are indicated are not to be disturbed.

1. Do not unreasonably encumber site with materials or equipment.
2. Do not load structure with weight that will endanger structure.
3. Assume full responsibility for protection and safekeeping of products stored on premises.
4. Obtain and pay for use of additional storage or work areas needed for operations.
5. Limit use of site for work, storage, loading, parking, and temporary offices.

C. Keep driveways and entrances serving the premises clear and available to the Owner and the Owner's employees at all times. Do not use these areas for parking or storage of materials. Schedule deliveries to minimize space and time requirements for storage of materials and equipment on site.

D. Safety: The Contractor shall provide a comprehensive safety package, consistent with Owner's site safety program, for coordination with all subcontractors and project personnel under his supervision. Safety program shall be submitted to Owner for approval prior to construction initiation. All Contractors are required to comply with all of the safety and health regulations of federal, state, local laws, OSHA and Owner's safety policies. Further details on safety requirements are included in specification section 013101, which contains occupational safety requirements that are required of all Contractors and their employees while on Owner's property.

1.8 OWNER OCCUPANCY

A. Full Owner Occupancy: The Owner will occupy the site and existing building during the entire construction period. Cooperate with the Owner during construction operations to minimize conflicts and facilitate Owner usage. Perform the Work so as not to interfere with the Owner's operations.

B. A Certificate of Substantial Completion will be executed for each specific portion of the Work to be occupied prior to Owner occupancy.

C. Prior to partial Owner occupancy, mechanical and electrical systems shall be fully operational. Required inspections and tests shall have been successfully completed. Coordinate final acceptance with commissioning agent for acceptance. Upon occupancy the Owner will provide operation and maintenance of mechanical and electrical systems in occupied portions of the building.

1.9 SEQUENCE OF CONSTRUCTION

A. All methods of procedure, phasing, scheduling, and sequencing of work shall be submitted to owner and engineer prior to the start of any work.

1.10 SEQUENCE OF WORK

A. Coordinate the work with the Owner so that it will not interfere with Owner's operation of the building.

B. The Contractor shall be responsible for a scheduled sequence in performing the work, so that it will not interfere with the Owner's operation in the building. The Contractor shall make temporary alterations and connections as required to execute the work so that all operations and services in the building are maintained with minimum possible interruption. Temporary shutdowns shall be

segregated and shall be of the shortest possible duration. All facilities and services shall be kept in continuous operation unless specific permission to the contrary is granted by the Owner. Discussion of any service interruption can only occur with written approval from Bluebird. SMOPs, controls, sequences shall be approved.

C. Generators shall be used as much as possible to avoid any building outages. The contractor shall include in his bid all fuel required to maintain duration on stand-by power.

D. Where the work on any system, systems, or equipment is performed by more than one trade or where the work on multiple systems or equipment performed by different trades effects the Owner's operation in the same space, the work of all the trades shall be scheduled, sequenced, and coordinated to the greatest possible extent so as to provide for the least number of interruptions, the shortest possible interruption in equipment and system operation, and to prevent interference with the Owner's operation. Discussion of any service interruption can only occur with written approval from Bluebird. SMOPs, controls, sequences shall be approved.

E. Down-time of all equipment and/or systems shall be coordinated with the Owner's Authorized Representative and shall require a detail "Method of Procedure" elsewhere in these specifications. No interruption shall occur in the operation of equipment or systems unless approved by the Owner's Authorized Representative. Olsson and owner shall have right to review and approve any MOP prior to initiating work.

F. The performance of work in this facility which requires the interruption of critical equipment shall only occur during normal business hours with parties from Bluebird, Olsson, and others available for attendance and via emergency response.

G. This work shall be coordinated fully with the Owner's Authorized Representative and shall be performed under conditions approved by the Owner's Representative. A "Method of Procedure will be submitted and approved by the Owner. Where work requires more than one work shift (6:00 P.M. to 6:00 A.M.), the contractor shall pay no extras and should include this off-shift hours within his bid should work go into these timeframes.

H. During the term of the contract it may be necessary to perform certain other portions of the original contract work (for certain systems or equipment or in certain spaces as directed by the Owner) between the hours of 6:00 P.M. and 6:00 A.M. or during other hours other than normal work hours. Should this occur, the Owner will need notice at least 5 working days prior to this off-shift work.

1. The schedule and sequence shall be as approved by the Owner's Representative and shall be documented by the Contractors approved "MOP".

I. When any work is to be performed during hours other than the normal hours of the Building, the Contractor shall make prior arrangements with the Owner for entrance into the Building and the space where work is to be performed. If any work is to be performed during a weekend, arrangements must be made with the Owner not latter than Wednesday preceding the weekend.

J. Certain equipment areas of this building require cooling continuously and cannot be brought offline for a period greater than 15 minutes for any reason. Therefore, the contractor shall provide any temporary cooling equipment required to maintain the environmental control in these areas.

K. In general, this building contains a great deal of high-tech equipment which requires cooling to remain operational. The Contractor shall take all necessary precautions to ensure that the Owner’s equipment which is heat sensitive remains operational. Employment of portable fans and portable cooling equipment shall be utilized when cooling systems must be shut down for periods greater than 15 minutes.

L. Where work is performed on equipment, or systems, or a part of a system and other associated work or associated control cannot be completed until a later date, temporary connections, controls, and measures shall be provided for the proper operation and control to at least provide operation and control equal to that which is existing.

END OF SECTION 010000

SECTION 010270 - APPLICATIONS FOR PAYMENT

PART 1 - GENERAL

1.1 SUMMARY

A. This Section specifies administrative and procedural requirements governing the Contractor's Applications for Payment.

B. The Contractor's Construction Schedule and Submittal Schedule are included in Section "Submittals".

1.2 SCHEDULE OF VALUES

A. Coordinate preparation of the Schedule of Values with preparation of the Contractor's Construction Schedule.

B. Correlate line items in the Schedule of Values with other required administrative schedules and forms, including:

1) Contractor's construction schedule.
2) Application for Payment form.
3) List of subcontractors.
4) Schedule of allowances.
5) Schedule of alternates.
6) List of products.
7) List of principal suppliers and fabricators.
8) Schedule of submittals.

C. Submit the Schedule of Values to the owners representative/engineer at the earliest feasible date, but in no case later than seven days before the date scheduled for submittal of the initial Application for Payment.

D. Sub-Schedules: Where the Work is separated into phases that require separately phased payments, provide sub-schedules showing values correlated with each phase of payment.

E. Format and Content: The Contractor shall submit a format for the Schedule of Values to the Owner or Owner’s Representative for approval.

F. Identification: Include the following Project identification on the Schedule of Values:

1) Project name and location.
2) Name of the Architect/Engineer.
3) Project number.
4) Contractor's name and address.
5) Date of submittal.

G. Arrange the Schedule of Values in a tabular form with separate columns to indicate the following for each item listed:

1) Generic name.
2) Related Specification Section.

3) Name of subcontractor.

4) Name of manufacturer or fabricator.

5) Name of supplier.

6) Change Orders (numbers) that have affected value.

7) Dollar value.

8) Percentage of Contract Sum to the nearest one-hundredth percent, adjusted to total 100 percent.

H. Provide a breakdown of the Contract Sum in sufficient detail to facilitate continued evaluation of Applications for Payment and progress reports. Break principal subcontract amounts down into several line items.

1) Round amounts off to the nearest whole dollar: the total shall equal the Contract Sum.

I. For each part of the Work where an Application for Payment may include materials or equipment, purchased or fabricated and stored, but not yet installed, provide separate line items on the Schedule of Values for initial cost of the materials, for each subsequent stage of completion, and for total installed value of that part of the Work.

J. Unit Cost Allowances: Show line item value of unit cost allowances as a product of unit cost times measured quantity as estimated from the best indication in the Contract Documents.

K. Margins of Cost: Show line items for indirect costs, and margins on actual costs, only to the extent that such items will be listed individually in Applications for Payment. Each item in the Schedule of Values and Applications for Payment shall be complete including its total cost and proportionate share of general overhead and profit margin.

1) At the Contractor's option, temporary facilities and other major cost items that are not direct cost of actual work-in-place may be shown as separate line items in the Schedule of Values or distributed as general overhead expense.

L. Schedule Updating: Update and resubmit the Schedule of Values when Change Orders or Construction Change Directives result in a change in the Contract Sum.

1.3 APPLICATIONS FOR PAYMENT

A. Each Application for Payment shall be consistent with previous applications and payments as certified by the Owner’s Representative and paid for by the Owner.

1) The initial Application for Payment, the Application for Payment at time of Substantial Completion, and the final Application for Payment involve additional requirements.

B. Payment Application Times: The date for each progress payment is the 15TH day of each month. The period of construction Work covered by each Application for Payment is the period ending 15 days prior to the date for each progress payment and starting the day following the end of the preceding period.

C. Payment Application Forms: Use AIA Document G 702 and Continuation Sheets G 703 as the form for Application for Payment.

D. Payment Application Forms: Use AIA forms.

E. Application Preparation: Complete every entry on the form, including notarization and execution by person authorized to sign legal documents on behalf of the Owner. Incomplete applications will be returned without action.

1) Entries shall match data on the Schedule of Values and Contractor's Construction Schedule. Use updated schedules if revisions have been made.

2) Include amounts of Change Orders and Construction Change Directives issued prior to the last day of the construction period covered by the application.

F. Transmittal: Submit three executed copies of each Application for Payment to the Owner's Representative by means ensuring receipt within 24 hours; one copy shall be complete, including waivers of lien and similar attachments, when required.

1) Transmit each copy with a transmittal form listing attachments, and recording appropriate information related to the application in a manner acceptable to the Architect.

G. Waivers of Mechanics Lien: With each Application for Payment submit waivers of mechanics liens from subcontractors or sub-subcontractors and suppliers for the construction period covered by the previous application.

1) Submit partial waivers on each item for the amount requested, prior to deduction for retainage, on each item.

2) When an application shows completion of an item, submit final or full waivers.

3) The Owner reserves the right to designate which entities involved in the Work must submit waivers.

H. Waiver Forms: Submit waivers of lien on forms, and executed in a manner, acceptable to Owner.

1) Initial Application for Payment: Administrative actions and submittals that must precede or coincide with submittal of the first Application for Payment include the following:

(a) List of subcontractors.

(b) List of principal suppliers and fabricators.

(c) Schedule of Values.

(d) Contractor's Construction Schedule (preliminary if not final).

(e) Schedule of principal products.

(f) Schedule of unit prices.

(g) Submittal Schedule (preliminary if not final).

(h) List of Contractor's staff assignments.

(i) List of Contractor's principal consultants.

(j) Copies of building permits.

(k) Copies of authorizations and licenses from governing authorities for performance of the Work.

(l) Initial progress report.

(m) Report of preconstruction meeting.

(n) Certificates of insurance and insurance policies.

(o) Performance and payment bonds (if required).

(p) Data needed to acquire Owner's insurance.

(q) Initial settlement survey and damage report, if required.

I. Application for Payment at Substantial Completion: Following issuance of the Certificate of Substantial Completion, submit an Application for Payment; this application shall reflect any

Certificates of Partial Substantial Completion issued previously for Owner occupancy of designated portions of the Work.

J. Administrative actions and submittals that shall proceed or coincide with this application include:

1) Occupancy permits and similar approvals.
2) Warranties (guarantees) and maintenance agreements.
3) Test/adjust/balance records.
4) Maintenance instructions.
5) Meter readings;.
6) Start-up performance reports.
7) Change-over information related to Owner's occupancy, use, operation and maintenance.
8) Final cleaning.
9) Application for reduction of retainage, and consent of surety.
10) List of incomplete work, recognized as exceptions to the Owner Representative's Certificate of Substantial Completion.

K. Final Payment Application: Administrative actions and submittals which must precede or coincide with submittal of the final payment Application for Payment include the following:

1) Completion of Project closeout requirements.
2) Completion of items specified for completion after Substantial Completion.
3) Assurance that unsettled claims will be settled.
4) Assurance that work not complete and accepted will be completed without undue delay.
5) Transmittal of required Project construction records to Owner.
6) Certified property survey.
7) Proof that taxes, fees and similar obligations have been paid.
8) Removal of temporary facilities and services.
9) Removal of surplus materials, rubbish and similar elements.
10) Change of door locks to Owner's access.

PART 2 - PRODUCTS (NOT APPLICABLE)

PART 3 - EXECUTION (NOT APPLICABLE)

END OF SECTION 010270

SECTION 010350 - MODIFICATION PROCEDURES

PART 1 - GENERAL

1.1 SUMMARY

A. This section specifies administrative and procedural requirements for handling and processing Contract modifications.

B. Related Sections: The following sections contain requirements that relate to this section:

1) Division 1 Section “Submittals” for requirements for the Contractor's Construction Schedule.

2) Division 1 Section “Application for Payment” for administrative procedures governing applications for payment.

3) Division 1 Section “Product Substitutions” for administrative procedures for handling requests for substitutions made after award of the Contract.

1.2 MINOR CHANGES IN THE WORK

A. Supplemental instructions authorizing minor changes in the Work, not involving an adjustment to the Contract Sum or Contract Time, will be issued by the Owner’s Representative on an Owner approved amendment form. Alternatively, the Contractor may elect to use AIA form G710, Architect’s Supplemental Instructions, to authorize these changes.

1.3 CHANGE ORDER PROPOSAL REQUEST

A. Owner-Initiated Proposal Requests: Proposed changes in the Work that will require adjustment to the Contract Sum or Contract Time will be issued by the Owner’s Representative, with a detailed description of the proposed change and supplemental or revised Drawings and Specifications, if necessary.

1) Proposal requests issued by the Owner’s Representative are for information only. Do not consider them an instruction either to stop work in progress, or to execute the proposed change.

2) Unless otherwise indicated in the proposal request, submit to the Owner’s Representative for the Owner's review an estimate of cost necessary to execute the proposed change.

3) Include a list of quantities of products to be purchased and unit costs, along with the total amount of purchases to be made. Where requested, furnish survey data to substantiate quantities.

4) Indicate applicable taxes, delivery charges, equipment rental, and amounts of trade discounts. Include a statement indicating the effect the proposed change in the Work will have on the Contract Time.

B. Contractor-Initiated Change Order Proposal Requests: When latent or other unforeseen conditions require modifications to the Contract, the Contractor may propose changes by submitting a request for a change to the Owner’s Representative.

1) Include a statement outlining the reasons for the change and the effect of the change on the Work. Provide a complete description of the proposed change. Indicate the effect of the proposed change on the Contract Sum and Contract Time.

2) Include a list of quantities of products to be purchased and unit costs along with the total amount of purchases to be made. Where requested, furnish survey data to substantiate quantities.

3) Indicate applicable taxes, delivery charges, equipment rental, and amounts of trade discounts.

4) Comply with requirements in Section "Product Substitutions" if the proposed change in the Work requires the substitution of one product or system for a product or system specified.

C. Proposal Request Form: The Contractor shall submit Change Order Proposal Requests on a Change Order Request form approved by Owner and Owner's Representative. Alternatively, the Contractor may elect to use AIA Document G 709 for Change Order Proposal Requests.

1.4 CONSTRUCTION CHANGE DIRECTIVE

A. Construction Change Directive: When the Owner and Contractor are not in total agreement on the terms of a Change Order Proposal Request, the Architect/Engineer may issue a Construction Change Directive, instructing the Contractor to proceed with a change in the Work, for subsequent inclusion in a Change Order. The Architect/Engineer shall use an Owner Approved form provided by the Construction Manager. Alternatively, the Owner and Construction Manager may elect to use AIA Form G714 to issue Construction Change Directives.

1) The Construction Change Directive will contain a complete description of the change in the Work and designate the method to be followed to determine change in the Contract Sum or Contract Time.

B. Documentation: Maintain detailed records on a time and material basis of work required by the Construction Change Directive.

1) After completion of the change, submit an itemized account and supporting data necessary to substantiate cost and time adjustments to the Contract.

1.5 CHANGE ORDER PROCEDURES

A. Upon the Owner's approval of a Change Order Proposal Request, the Owner's Representative will issue a Change Order for signatures of the Owner and Contractor on an Owner Approved form, as provided in the Conditions of the Contract. Alternatively, the Owner may elect to handle Change Orders on AIA Form G701

PART 2 - PRODUCTS (NOT APPLICABLE)

PART 3 - EXECUTION

A. Contractor shall submit document forms for approval by Owner and Owner's Representative which cover the following items in this Section: Minor Changes in Work, Change Order Proposal Request, Construction Change Directive and Change Order Procedures. The Contractor and Owner will use AIA Forms for any or all of these documents.

END OF SECTION 010350

SECTION 010400 - PROJECT COORDINATION

PART 1 - GENERAL

1.1 SUMMARY

A. This Section specifies administrative and supervisory requirements necessary for Project coordination including, but not necessarily limited to:

1) Coordination
2) Administrative and supervisory personnel
3) General installation provisions
4) Cleaning and protection.

B. Progress meetings, coordination meetings and preinstallation conferences are included in Section "Construction Progress".

C. Requirements for the Contractor's Construction Schedule are included in Section "Submittals".

1.2 GENERAL

A. The Contractor has full responsibility and authority regarding the scheduling and coordination of work.

B. All Subcontractors under and not under contract with the Contractor, shall abide by the project schedules and coordination requests made by the Contractor.

C. The Contractor shall have a competent superintendent at the site at all times when there is an employee of the Contractor or an employee of any subcontractor on the site. Due to the nature of this project, there will be no exceptions to this rule.

D. The Owner's Representative has full authority and responsibility for the work. All dealings and decisions regarding execution of the work shall be through him.

E. The Contractor communicates directly with the Owner's Representative, Subcontractors, vendors, and suppliers.

F. The Subcontractors shall coordinate with the Contractor who has the overall responsibility for coordination of the work.

1.3 COORDINATION

A. Coordination: Coordinate construction activities included under various Sections of these Specifications to assure efficient and orderly installation of each part of the Work. Coordinate construction operations included under different Sections of the Specifications that are dependent upon each other for proper installation, connection, and operation.

1) Where installation of one part of the Work is dependent on installation of other components, either before or after its own installation, schedule construction activities in the sequence required to obtain the best results.
2) Where availability of space is limited, coordinate installation of different components to assure maximum accessibility for required maintenance, service and repair.

B. Make adequate provisions to accommodate items scheduled for later installation.

C. Where necessary, prepare memoranda for distribution to each party involved outlining special procedures required for coordination. Include such items as required notices, reports, and attendance at meetings.

1) Prepare similar memoranda for the Owner and separate Contractors where coordination of their Work is required.

D. Project Meetings: Prepare and submit a detailed plan for approval by Owner which specifies administrative and procedural requirements for project meetings. At a minimum project meetings should include Pre-Construction Conferences, Pre-Installation Conferences, Coordination Meetings and Progress Meetings. The plan should include detailed descriptions for each meeting type consisting of a list of typical agenda items, attendees list, meeting schedules, utilization of meeting minutes, report generation and schedule updates.

E. Schedules: Prepare and submit a detailed plan for approval by Owner which specifies the development of project schedules and details the administrative and procedural requirements for generating reports. The construction schedule should be developed based on the Critical Path Method (CPM) and shall include as a minimum such critical items as:

1) Long lead time procurement activities;
2) Contract phasing activities;
3) Activation and testing activities;
4) Milestone dates for contract phasing requirements;
5) Buyer-furnished equipment activities;
6) Logic restraints reflecting the flow of manpower;
7) Utility tie-in activities;
8) Clean-up and punchlist activities
9) Activity durations in working days;
10) Shop drawing, submittals and approval;
11) Inspections and Tests.

F. Administrative Procedures: Coordinate scheduling and timing of required administrative procedures with other construction activities to avoid conflicts and ensure orderly progress of the Work. Such administrative activities include, but are not limited to, the following:

1) Preparation of schedules. Installation and removal of temporary facilities. Delivery and processing of submittals. Progress meetings. Project Close-out activities.

1.4 SUBMITTALS

A. Coordination Drawings: Prepare and submit coordination Drawings where close and careful coordination is required for installation of products and materials fabricated off-site by separate entities, and where limited space availability necessitates maximum utilization of space for efficient installation of different components.

1) Show the interrelationship of components shown on separate Shop Drawings.
2) Indicate required installation sequences.
3) Comply with requirements contained in Section "Submittals."

B. Staff Names: Within 15 days of Notice to Proceed, submit a list of the Contractor's principal staff assignments, including the Superintendent and other personnel in attendance at the site; identify individuals, their duties and responsibilities; list their addresses and telephone numbers.

1) Post copies of the list in the construction trailer.

PART 2 - PRODUCTS (NOT APPLICABLE)

PART 3 - EXECUTION

1.5 GENERAL INSTALLATION PROVISIONS

A. Inspection of Conditions: Require the Installer of each major component to inspect both the substrate and conditions under which Work is to be performed. Do not proceed until unsatisfactory conditions have been corrected in an acceptable manner.

B. Manufacturer's Instructions: Comply with manufacturer's installation instructions and recommendations, to the extent that those instructions and recommendations are more explicit or stringent than requirements contained in Contract Documents.

C. Inspect materials or equipment immediately upon delivery and again prior to installation. Reject damaged and defective items.

D. Provide attachment and connection devices and methods necessary for securing Work. Secure Work true to line and level. Allow for expansion and building movement.

E. Visual Effects: Provide uniform joint widths in exposed Work. Arrange joints in exposed Work to obtain the best visual effect Refer questionable choices to the Architect for final decision.

F. Recheck measurements and dimensions, before starting each installation.

G. Install each component during weather conditions and Project status that will ensure the best possible results. Isolate each part of the completed construction from incompatible material as necessary to prevent deterioration.

H. Coordinate temporary enclosures with required inspections and tests, to minimize the necessity of uncovering completed construction for that purpose.

I. Mounting Heights: Where mounting heights are not indicated, install individual components at standard mounting heights recognized within the industry for the particular application indicated. Refer questionable mounting height decisions to the Architect for final decision.

1.6 CLEANING AND PROTECTION

A. During handling and installation, clean and protect construction in progress and adjoining materials in place. Apply protective covering where required to ensure protection from damage or deterioration at Substantial Completion.

B. Clean and maintain completed construction as frequently as necessary through the remainder of the construction period. Adjust and lubricate operable components to ensure operability without damaging effects.

C. Limiting Exposures: Supervise construction activities to ensure that no part of the construction, completed or in progress, is subject to harmful, dangerous, damaging, or otherwise deleterious exposure during the construction period. Where applicable, such exposures include, but are not limited to, the following:

1) Excessively high or low temperatures.

2) Thermal shock.

3) Excessively high or low humidity.

4) Air contamination or pollution.
5) Water or ice.
6) Solvents.
7) Chemicals.
8) Light.
9) Puncture.
10) Abrasion.
11) Heavy traffic.
12) Soiling, Staining and Corrosion
13) Rodent and insect infestation.
14) Electrical current.
15) High speed operation,
16) Improper lubrication,
17) Unusual wear or other misuse.
18) Contact between incompatible materials.
19) Destructive testing.
20) Misalignment.
21) Excessive weathering.
22) Unprotected storage.
23) Improper shipping or handling.
24) Theft.
25) Vandalism.

END OF SECTION 010400

REQUEST FOR INFORMATION

Project Name: **DESIGN AND CONSTRUCT TASMG READINESS CENTER**

Project No.: **T1809-01**

Request From:

Name _____

Company _____

Address _____

_____

Phone _____

Fax _____

Email _____

RFI # _____

Please Clarify the Following:
Drawing #: _____

Specification Section: _____

Request Response By: _____

QUESTIONS (Number each one):

ANSWER (List answers with same number as question):

SECTION 01 21 00 - ALLOWANCES

PART 1 - GENERAL

1.1 RELATED DOCUMENTS

A. Drawings and general provisions of the Contract including General and Supplementary Conditions and other Division 01 Specification Sections apply to this Section.

1.2 SUMMARY

A. This Section includes administrative and procedural requirements governing allowances.

1. Certain items are specified in the Contract Documents by allowances. Allowances have been established in lieu of additional requirements and to defer selection of actual materials and equipment to a later date when additional information is available for evaluation. If necessary, additional requirements will be issued by Contract Change.

B. Types of allowances include the following:

1. Lump-sum allowances.
2. Weather allowances.

C. Related Sections include the following:

1. Division 01 Section "Contract Modification Procedures" for procedures for submitting and handling Contract Changes for allowances.
2. Division 01 Section "Unit Prices" for procedures for using unit prices.

1.3 WEATHER ALLOWANCE

A. Included within the completion period for this project are a specified number of “bad weather” days (see Schedule of Allowances).

B. The Contractor’s progress schedule shall clearly indicate the bad weather day allowance as an “activity” or “activities”. In the event weather conditions preclude performance of critical work activities for 50% or more of the Contractor’s scheduled workday, that day shall be declared unavailable for work due to weather (a “bad weather” day) and charged against the above allowance. Critical work activities will be determined by review of the Contractor’s current progress schedule.

C. The Contractor’s Representative and the Construction Representative shall agree monthly on the number of “bad weather” days to be charged against the allowance. This determination will be documented in writing and be signed by the Contractor and the Construction Representatives. If there is a failure to agree on all or part of the “bad weather” days for a particular month, that disagreement shall be noted on this written document and signed by each party’s representative. Failure of the Contractor’s representative to sign the “bad weather” day documentation after it is presented, with or without the notes of disagreement, shall constitute agreement with the “bad weather” day determination contained in that document.

D. There will be no modification to the time of contract performance due solely to the failure to deplete the “bad weather” day allowance.

E. Once this allowance is depleted, a no cost Contract Change time extension will be executed for “bad weather” days, as defined above, encountered during the remainder of the Project.

1.4 SELECTION AND PURCHASE

A. At the earliest practical date after award of the Contract, Designer of the date when final selection and purchase of each product or system described by an allowance must be completed to avoid delaying the Work.

B. At Designer's request, obtain proposals for each allowance for use in making final selections. Include recommendations that are relevant to performing the Work.

C. Purchase products and systems selected by Designer from the designated supplier.

1.5 SUBMITTALS

A. Submit proposals for purchase of products or systems included in allowances, in the form specified for Contract Changes.

B. Submit invoices or delivery slips to show actual quantities of materials delivered to the site for use in fulfillment of each allowance.

C. Coordinate and process submittals for allowance items in same manner as for other portions of the Work.

1.6 COORDINATION

A. Coordinate allowance items with other portions of the Work. Furnish templates as required to coordinate installation.

1.7 LUMP-SUM ALLOWANCES

1. Lump sum in the amount of **$27,343.25** for City Utilities gas main extension and service contract per the following documents.

1.8 No Equal Products

1. Division 7 – Insulated Metal Wall Panels - Centria
2. Division 7 – Standing Seam Roof Panels – Centria Architectural Systems
3. Division 9 – Sound Absorbing Ceiling System – Turf Design “Slice”
4. Division 10 - Locksets/Cores/Hardware - Best
5. Division 23 – Direct Digital Controls – Automated Logic Company
6. Division 26 – Interior Lighting (Connecting Lobby) – Tech Lighting
7. Division 28 – Mass Notification Fire Alarm System – Simplex Grinnell (JCI)

PART 2 - PRODUCTS (Not Used)

PART 3 - EXECUTION

3.1 EXAMINATION

A. Examine products covered by an allowance promptly on delivery for damage or defects. Return damaged or defective products to manufacturer for replacement.

3.2 PREPARATION

A. Coordinate materials and their installation for each allowance with related materials and installations to ensure that each allowance item is completely integrated and interfaced with related work.

3.3 SCHEDULE OF ALLOWANCES

A. Weather Allowance: Included within the completion period for this Project four-teen (14) “bad weather” days.

END OF SECTION 01 21 00

EXTENSION CONTRACT

BETWEEN

CITY UTILITIES OF SPRINGFIELD, MISSOURI

AND

MO AVCRAD

3025 N LESTER JONES AVE

APPLICATION NO. **B90842**

CONTRACT DATE **08-02-19**

Form 768
Rev. 6-96

EXTENSION CONTRACT
GAS – WATER - ELECTRIC
CITY UTILITIES OF SPRINGFIELD, MISSOURI

ELECTRIC		GAS		WATER		GAS/WATER JOINT TRENCH	
Appl. #	**B90842**	Appl. #	**B90842**	Appl. #	**B90842**	Appl. #	**B90842**
Appl. Date	**04-16-19**	Appl. Date	**04-16-19**	Appl. Date	**04-16-19**	Appl. Date	**04-16-19**
Payment Date	**N/A**	Payment Date		Payment Date	**N/A**	Payment Date	**N/A**

THIS CONTRACT AND AGREEMENT, made this _____ day of _____, 20_____, between **MO AVCRAD** herein called Developer, and the BOARD OF PUBLIC UTILITIES OF THE CITY OF SPRINGFIELD, MISSOURI.

WITNESSETH:

WHEREAS, Developer desires to have gas made available to serve certain real estate located in Greene County, Missouri, as designated on City Utilities Drawing(s) Numbered:

Gas and Water Drawing No. **80258** attached hereto and made a part hereof, said real estate being described as follows: Located at **3025 N LESTER JONES AVE, 01-29-23.**

WHEREAS, City Utilities is willing and able to make such extensions upon the terms and conditions herein set forth. THEREFORE, it is mutually agreed as follows:

1. Developer will pay an amount in cash for the extension of the **GAS** distribution system as required by the effective resolutions adopted by the Board of Public Utilities governing such extension, the amount of said payment to be as hereinafter stated. Said payment shall not be subject to refund, except as provided in Paragraphs 12 and 13. The type of extension and footage called for in this contract is as follows:

Electric Overhead		Water	
Gas	**369**	Gas/Water Joint Trench	
Electric Underground			

2. Developer will execute and convey without cost to City Utilities all easements necessary for electric, gas and/or water main extensions specified herein and all easements as may be needed to serve premises adjacent to or beyond those served by this extension.

3. Developer shall have the following completed prior to the installation of electric, gas and/or water by City Utilities if necessary for the extension: a) sanitary sewer work, b) the entire right-of-way to be within plus or minus one (1) foot of the finished grade, c) areas adjacent to the right-of-way where underground electric is to be installed shall be cleared and graded to within two (2) inches of final grade, d) property pins established, e) centerline and elevation staking per Paragraph 5, f) tree trimming, g) all excess dirt shall be removed from the right-of-way.

4. In undeveloped subdivisions, the developer shall, at his own expense, install centerline and elevation stakes for gas and water main extensions and electric line extensions conforming to plans and guidelines provided by City Utilities.

5. Developers shall reimburse City Utilities for all cost, damage and expense incurred by City Utilities which results from the relocation, adjustment or repair of any City Utilities property occasioned by (1) any change in the plan incorporated in the contract for utility service other than a change required by City Utilities, or (2) any act of the developer, his contractors or their subcontractors.

6. Developer shall acquire no title or rights whatever in the electric line, gas main extension or water main extension described in this Contract, by reason of payment made or other consideration furnished such title and rights belonging only to City Utilities.

7. Developer and any customers subsequently connected to said electric, gas and/or water main extension shall be subject to City Utilities' Rules and Regulations and Resolutions of the Board of Public Utilities in effect at the time or as later amended and shall have no preferential rate or rights. Electric, gas and water service at all times is subject to availability of electricity, gas, and water and no guarantee of quantity, pressure, or voltage is made or intended.

8. The Applicants name and authorize the Developer as their agent to represent them in all matters of this Contract. The Developer shall not assign his privileges or duties of said Contract without written consent by the General Manager of City Utilities and all applicants hereto.

9. This Contract contains the entire agreement between the Parties for said electric, gas and/or water extension(s) and the obligations hereof shall be binding upon the heirs, executors, or successors of the respective parties.

10. SUMMARY OF PAYMENT: Total Cost of Main Extension

Electric Overhead	$	0.00
Electric Underground	$	
Gas/Water Joint Trench	$	
Gas	$	27,343.25
Water	$	0.00
Paving Costs	$	0.00
Other Costs	$	0.00
TOTAL	$	27,343.25

Developer has paid to City Utilities **$27,343.25** in cash, which is the cost to the Developer, hereinabove referred to as Total Payment, determined in accordance with the Rules and Regulations of City Utilities, and the effective Resolutions of the Board of Public Utilities pertaining to extension of the distribution system(s) called for in this contract.

11. Developer understands and agrees that in the event the Developer cancels this Contract for any reason before construction commences, ten percent (10%) of said Total Payment or $250.00 for each type of extension, whichever is less, shall be retained by City Utilities as liquidated damages and the remainder of said Total Payment shall be refunded to Developer by City Utilities.

12. Developer understands and agrees that in the event commencement of construction on this project is delayed for any reason by Developer beyond one hundred twenty (120) days from the date of this Contract, this Contract shall be automatically canceled and ten percent (10%) of said Total Payment or $250.00, whichever is less, shall be retained by City Utilities as liquidated damages and the remainder of said Total Payment shall be refunded to Developer by City Utilities.

13. Developer understands and agrees that in the event this Contract or the associated specific authorization, if such be applicable, requires approval by the Board of Public Utilities and said approval is not granted, this Contract shall be automatically canceled and the Total Payment shall be refunded to Developer by City Utilities.

IN WITNESS WHEREOF, the parties hereto have signed their names below.

_____

MO AVCRAD
6819 N BOUNDARY RD
JEFFERSON CITY, MO 65105

BOARD OF PUBLIC UTILITIES OF THE CITY OF SPRINGFIELD, MISSOURI

By _____

PAM NELSON
MANAGER – DEVELOPER SERVICES
CITY UTILITIES OF SPRINGFIELD, MISSOURI

Developer Services
2655 S. Blackman Road
Springfield, MO 65809
Phone: 417-831-8888
developer_services@cityutilities.net

Cost Memorandum

August 2, 2019

To: Jane Earhart – Olsson Associates

Re: 3025 N Lester Jones Ave / B90842 / Roy Blunt Readiness Center

Our Customer Engineering department has determined costs for the utility services at your project site as follows:

WORK CODE – SERVICE TYPE	COST
G01 – Gas Main Extension (CU installed)	$20,411.85
G10 – 2" Gas Service	$3,774.58
G13 – Gas Meterset	$3,156.82
Total	***$27,343.25***

We accept checks and Visa/MC/Discover. Credit card payments may be made over the phone or in-person at the address above. Checks should be made out to **City Utilities** and mailed to **City Utilities of Springfield ATTN: Developer Services, PO Box 551, Springfield, MO 65801** or hand delivered to the address above. If you have any questions, please contact me.

Thanks,

Josh Casey
Developer Services
O: 417-831-8816
Josh.casey@cityutilities.net

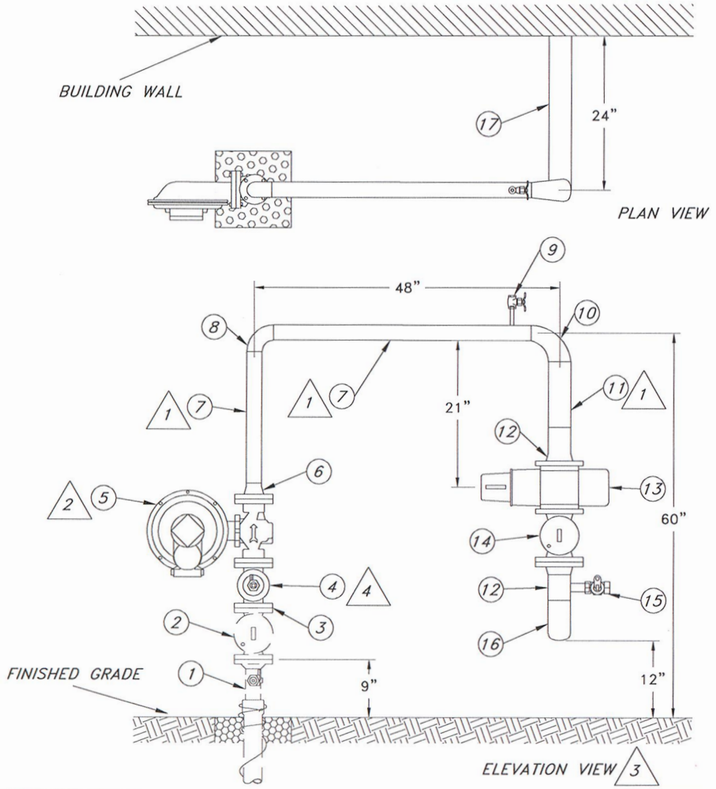

MATERIAL LIST

	QTY	DESCRIPTION	STOCK NO.
1	1	2" FLANGED ANODELESS RISER (SEE GS-250)	
2	1	2" FLANGED PLUG VALVE (SEE GS-250)	
3	1	2" FLANGED INSULATION KIT (SEE GS-420)	204216
4	1	2" T-STRAINER WITH 100 MESH SCREEN	205245
5	1	2" x 2" FLANGED ITRON B38R REGULATOR WITH 3/8" ORIFICE. SEE NOTE 2	211858
6	1	2" WELD NECK FLANGE	204196
7	6	2" BLACK STEEL PIPE	201010
8	1	2" 90° WELD ELL	205050
9	1	1/4" GAUGE TAP (SEE GS-510)	
10	1	3" x 2" 90° WELD ELL	205057
11	1	3" BLACK STEEL PIPE	201015
12	2 2	3" STUB ENDS 3" LAP JOINT FLANGES (SEE GS-500)	204111 204110
13	1	5M OR 7M FLANGED ROTARY METER	
14	1	3" NON-LUBRICATED FLANGED VALVE	204400
15	1	1-1/2" BYPASS VALVE TAP (SEE GS-514)	
16	1	3" 90° WELD ELL	205055
17		3" CUSTOMER PIPING STUBBED OUT 24" BEYOND THE BUILDING WALL AND 12" ABOVE GRADE	

GENERAL NOTES

1. LENGTH MAY VARY TO ADJUST ELEVATION OR RUN OF METER SET.
2. REGULATOR COMES WITH MAXIMUM ALLOWABLE ORIFICE SIZE. ORIFICE SIZE MAY BE SMALLER BUT NOT LARGER THAN STATED TO MATCH ACTUAL LOAD CONDITIONS. PAINT SPRING CAP RED TO INDICATE ELEVATED PRESSURE. ADD BRASS TAG.
3. INSTALLATION OF METER SET MAY BE MIRRORED RIGHT TO LEFT. ROTATE THE METER AS REQUIRED.
4. INSTALL STRAINER DISCHARGE AWAY FROM THE WALL OF THE BUILDING.

CONSTRUCTION STANDARD
CITY UTILITIES OF
SPRINGFIELD, MISSOURI

5M OR 7M
ROTARY METER SET
HP DISTRICT
2 PSI DELIVERY

LATEST REV. DATE	STANDARD NO.	PAGE:
–	GS–	

LOAD SHEET - COMMERCIAL GAS METER

NEW SERVICE X ADDING LOAD _____ OTHER _____ DATE: 7/24/19

OWNER/CONTACT: MO AVCRAD PHONE:

ARCHITECT/ENGINEER: OLSSON ASSOCATES PHONE: 417-890-8802

PLUMBER: PHONE:

EQUIPMENT	CFH	ACTIVITY NUMBER:	787093
KITCHEN LOAD	660	METER STANDARD:	NONE
GENERATOR	2983	METER LOCATION:	EAST SIDE
		METER BRAND:	ROOTS
		METER SIZE:	5M
		METER NUMBER:	
		SIZE CHANGE:	YES
		REGULATOR BRAND:	ITRON
		REGULATOR MODEL:	B38R
		ORIFICE SIZE:	3/8"
		SPRING COLOR:	SILVER / RED
		DELIVERY PRESSURE:	2 PSI
		MAIN PRESSURE:	58 PSI
		DESIGNER:	MARK LOGAN
		PHONE NUMBER:	831-8540
		METER SET DATE:	
		TECHNICIAN:	
		NOTES:	
		OVERPRESSURE LIMIT	3.5 PSI
TOTAL	3643	SPID:	

STATE OF MISSOURI
MARK A. LOGAN
NUMBER E-2002004364
8/1/19
REGISTERED PROFESSIONAL ENGINEER

Mark A. Logan – Professional Engineer MO# E-2002004364

NATURAL GAS & WATER ENGINEERING

City Utilities
Connecting Our Community

3025 E. LESTER JONES AVENUE
BLUNT READINESS CENTER
6" GAS MAIN EXT. &
2" SERVICE W/ 5M METER

DESIGNER	APPROVED BY:	MAP NO.:
MARK LOGAN	SLB 8-1-19	NW-G-09
PLOT DATE: 8/1/2019	APPLICATION NO.: B90842	SCALE: NTS
CONSTRUCTED BY: CITY UTILITIES / CONSTRUCTION COMPLETE DATE:	SHEET 2 OF 2	DRAWING NO.: 80258-D

SECTION 012300 - ALTERNATES

PART 1 - GENERAL

1.1 RELATED DOCUMENTS

A. Drawings and general provisions of the Contract, including General and Supplementary Conditions, Bid Form and other Division 1 Specification Sections, apply to this Section.

1.2 SUMMARY

A. This Section includes administrative and procedural requirements governing Alternates.

1.3 DEFINITIONS

A. Definition: An alternate is an amount proposed by bidders and stated on the Bid Form for certain work defined in the Bidding Requirements that may be added to the Base Bid amount if the Owner decides to accept a corresponding change in either the amount of construction to be completed, or in the products, materials, equipment, systems, or installation methods described in the Contract Documents..

1. The cost for each alternate is the net addition to the Contract Sum to incorporate the Alternate into the Work. No other adjustments are made to the Contract Sum.

B. No additional time will be allowed for alternate work unless the number of calendar days is so stated on the bid form.

1.4 PROCEDURES

A. Coordination: Modify or adjust affected adjacent Work as necessary to completely and fully integrate the Alternate Work into the Project.

1. Include as part of each alternate, miscellaneous devices, accessory objects, and similar items incidental to or required for a complete installation whether or not mentioned as part of the Alternate.

B. Notification: The award of the Contract will indicate whether alternates have been accepted or rejected.

C. Execute accepted alternates under the same conditions as other Work of this Contract.

PART 2 - PRODUCTS (Not Applicable)

PART 3 - EXECUTION

3.1 SCHEDULE OF ALTERNATES

A. Alternate No. 1: *Install machine room-less electric traction elevator per bid alternate sheets. Refer to division 14 specifications for elevator and required components. Also include all required electrical power work including elevator power module, fire alarm relays, elevator recall control and fire alarm detection, emergency raise/lower.*

B. Alternate No. 2: *Install new 250 KW Natural Gas Generator with level 1 sound enclosure. Include generator housekeeping pad, Electrical Wiring to/from ATS to generator pad, Generator control*

interlocks to Automatic transfer switch, painted natural gas piping with supports, gas shutoff valve and gas regulator, and Building automation monitoring of generator via Bacnet interface card. Include programming/graphics within Automated Logic DDC control system.

C. Alternate No. 3: *Install Epic Accoustic metal decking on second floor sloped roof in lieu of steel decking. Refer to specifications division 05 and bid alternate sheets for acoustic steel deck requirements.*

D. Alternate No. 4: *For additional LEED points on submittal, the following Bid Add Alternate Work shall be included:*

1. *Concrete Parking Lot in lieu of Asphalt base bid*
2. *Installation of two (2) dual electric car charging stations for four (4) designated energy efficient vehicle parking stalls.*
3. *Contractor including with his bid using an external consultant in order to assist them with building life-cycle impact reduction analysis. (M&R credit 1)*
4. *Contractor including with his bid building product disclosure and optimization on material ingredients (M&R credit 4)*
5. *Contractor including with his bid for indoor air quality assessment completed by third party agent (IEQ credit 4)*

END OF SECTION 01 23 00

SECTION 012600 - CONTRACT MODIFICATION PROCEDURES

PART 1 - GENERAL

1.1 RELATED DOCUMENTS

A. Drawings and general provisions of the Contract, including General and Supplementary Conditions and other Division 1 Specification Sections, apply to this Section.

1.2 SUMMARY

A. This Section specifies administrative and procedural requirements for handling and processing Contract modifications.

B. Related Sections include the following:
   1. Division 0 Section 00700, Article 3.1 "Acceptable Substitutions" for administrative procedures for handling requests for substitutions made after Contract award.
   2. Division 0 Section 00700, Article 4.0 "Changes in the Work" for Contract Change requirements.

1.3 REQUESTS FOR INFORMATION

A. In the event that the Contractor or subcontractor, at any tier, determines that some portion of the drawings, specifications, or other contract documents requires clarification or interpretation, the contractor shall submit a “Request for Information” (RFI) in writing to the Designer. A RFI may only be submitted by the Contractor and shall only be submitted on the RFI forms provided by the Owner. The Contractor shall clearly and concisely set forth the issue for which clarification or interpretation is sought and why a response is needed. In the RFI, the Contractor shall set forth an interpretation or understanding of the requirement along with reasons why such an understanding was reached.

B. Responses to RFI shall be issued within 5 working days of receipt of the request from the contractor unless the Designer determines that a longer time is necessary to provide an adequate response. If a longer time is determined necessary by the Designer, the Designer will, within 5 working days of receipt of the request, notify the Contractor of the anticipated response time. If the Contactor submits a RFI on a time sensitive activity on the current project schedule, the Contractor shall not be entitled to any time extension due to the time it takes the Designer to respond to the request provided that the Designer responds within the 10 working days set forth above.

C. Responses from the Designer will not change any requirement of the contract documents. In the event the Contractor believes that a response to a RFI will cause a change to the requirements of the contract document, the Contractor shall give written notice to the Designer requesting a Contract Change for the work. Failure to give such written notice within 10 working days, shall waive the Contractor’s right to seek additional time or cost under Article 4, “Changes in the Work” of the General Conditions.

1.4 MINOR CHANGES IN THE WORK

A. Designer will issue supplemental instructions authorizing Minor Changes in the Work, not involving adjustment to the Contract Amount or the Contract Time, on ”Designer’s Supplemental Instructions” (DSI).

1.5 PROPOSAL REQUESTS

A. The Designer or Owner representative will issue a detailed description of proposed changes in the Work that may require adjustment to the Contract Sum or the Contract Time. The proposed change description will be issued using the “Request for Proposal” (RFP) form. If necessary, the description will include supplemental or revised Drawings and Specifications.

1. Proposal Requests issued by the Designer or Owner representative are for information only. Do not consider them instructions either to stop work in progress or to execute the proposed change.
2. Within 10 working days after receipt of Proposal Request, submit a quotation estimating cost adjustments to the Contract Sum and the Contract Time necessary to execute the change. Include:

a. A detailed breakdown of costs per Article 4.1 of the General Conditions.
b. If requesting additional time per Article 4.2 of the General Conditions, include an updated Contractor's Construction Schedule that indicates the effect of the change, including, but not limited to, changes in activity duration, start and finish times, and activity relationship.

1.6 CONTRACT CHANGE PROCEDURES

A. On Owner's approval of a Proposal Request, the Designer or Owner representative will issue a Contract Change for signatures of Owner and Contractor on the “Contract Change” form.

PART 2 - PRODUCTS (Not Used)

PART 3 - EXECUTION

3.1 ACCESSING FORMS

A. All forms are available at the Facilities Management, Design and Construction website: http://oa.mo.gov/fmdc/dc/contractorforms.htm

END OF SECTION 012600

SECTION 013100 – COORDINATION

PART 1 - GENERAL

1.1 RELATED DOCUMENTS

A. Drawings and general provisions of the Contract, including General and Supplementary Conditions, Bid Form and other Division 1 Specification Sections, apply to this Section.

1.2 SUMMARY

A. This Section includes administrative and supervisory requirements necessary for coordinating construction operations including, but not necessarily limited to, the following:

1. Coordination with facility personnel.
2. Coordination with personnel from other agencies.
3. Coordination with other contracts let by the Owner in connection with this work.
4. Coordination with the Construction Representative concerning special requirements in connection with this work.

1.3 COORDINATION

A. Partnering: The Owner desires to create a partnering relationship with the Contractor, principal subcontractors, major suppliers and the Consultant. This relationship will be structured to draw on the strengths of each organization to identify and achieve reciprocal goals. The objectives are the effective and efficient contract performance and project completion within budget and schedule –all in accordance with the drawings and specifications.

1. This partnering relationship will be bilateral in makeup and participation. Expenses for the Facilitator and facilities shall be paid by the Owner. No additional costs shall be allowed to the Contractor.
2. To implement this partnering initiative, project representatives for the Contractor, Consultant and Owner will meet to make arrangements for a seminar/team building workshop. These individuals will make arrangements to determine attendees at the workshop. The Owner will provide a staff member to act as a facilitator or hire an independent facilitator. With the facilitator, the agenda of the workshop, duration and location of the workshop will be finalized. People required to be in attendance at the workshop will be key site personnel from the Contractor, Consultant and Owner. The management of these individuals will also be in attendance at the workshop.
3. Follow-up workshops may be held periodically throughout the duration of the contract as agreed by the Contractor, Consultant and Owner.
4. The establishment of a partnering charter on this project will not alter the terms and conditions of the contract.

B. The Contractor shall coordinate construction operations for this project with the Construction Representative and facility personnel to assure efficient and orderly completion of the Work.

1. Schedule construction operations in the sequence required to obtain the best results.
2. Coordinate construction operations to allow existing facility to remain in operation while the Work is being performed.
3. Coordinate construction operations to accommodate construction operations of other contracts let by the Owner.

C. The Contractor shall, where necessary, prepare memoranda for distribution to each party involved, outlining special procedures required for coordination. Include such items as required notices, reports and attendance at meetings.

1. Prepare similar memoranda for the Owner and separate contractors where coordination of their work is required.

D. Administrative Procedures: The Contractor shall coordinate scheduling and timing of required administrative procedures with other construction activities to avoid conflicts and assure orderly progress of the Work. Such administrative activities include, but are not limited to, the following:

1. Preparation of schedules.
2. Installation and removal of temporary facilities.
3. Delivery and processing of submittals.
4. Progress meetings.
5. Project closeout activities.

1.4 SUBMITTALS

A. Staff Names: Within eighteen (18) calendar days of commencement of construction operations, the Contractor shall submit a list of the Contractor's principal staff assignments, including the superintendent and other personnel in attendance at the Project Site. The list shall identify individuals, their duties, responsibilities, addresses and telephone numbers.

1. Post copies of the list in the temporary field office

B. Schedule: Within eighteen (18) calendar days of commencement of construction operations, the Contractor shall submit a schedule which coordinates the construction activities of this work with the work of other contracts. See Division 01320-Construction Progress for specific requirements.

PART 2 - PRODUCTS (Not Applicable)

PART 3 - EXECUTION

3.1 GENERAL COORDINATION PROVISIONS

A. A pre-construction conference will be held prior to beginning of construction. The date, time and exact place of this meeting will be determined after contract award and notification of all interested parties. The Contractor shall arrange to have the job superintendent and all prime subcontractors present at the meeting. During the pre-construction conference, the construction procedures and information necessary for submitting payment requests will be discussed and materials distributed, along with any other pertinent information.

B. Coordination drawings of the various trade's work as applicable shall be executed prior to commencement of the work.

END OF SECTION 013100

SECTION 013101 - CONTRACTOR SAFETY & SPECIAL INSTRUCTIONS

PART 1. GENERAL

1.1 RELATED DOCUMENTS

A. Drawings and general provisions of the Contract Documents and other Division 1 Specification Sections apply to this section

PART 2. COORDINATION OF WORK

A. All Contractors are required to comply with all of the safety and health regulations of federal, state, local laws, OSHA and Owner's safety policies.

B. This specification section contains occupational safety requirements that are required of all Contractors and their employees while on Owner's property. This section is written so that the Contractor may know that he is ultimately responsible for all safety of employees under his supervision. While it is not possible to specify all rules of OSHA, federal and state regulations, this section does set forth the policy through which the Contractor and Owner will resolve issues regarding the safety of employees. Any time a new or different safety hazard arises, Owner's Project Administrator, Safety Representatives, and the Contractor shall review the situation and establish additional rules that will minimize the risk to all employees.

PART 3. GENERAL CONDITIONS

A. The Owner may have its own Contractor Safety Program. Where the provisions of this Section differ from the Owner’s Contractor Safety Program, the more stringent provisions shall govern.

B. Contractor will be provided space allotment for a limited number of trailers. Contractors shall submit the number and size for Owner approval.

C. Contractors are to provide for their own portable toilets and their own ladders.

D. All Contractors are to use the designated entrance.

E. MSD (Material Safety Data) must be issued prior to use for each material in this project by the General Contractor.

F. No trash accumulation will be allowed on site. All trash must be removed daily.

G. All materials must be protected during storage on site to prevent damage, accumulation of dirt or dust, and vermin infestation.

H. Project work areas are designated non-smoking areas.

I. Construction workers will be allowed access to the facility through the security gate during approved working hours. Construction workers who violate these requirements will not be allowed back to the facility the day of their first warning, and subsequent violations will result in a construction worker never being allowed access to the facility.

J. All construction workers are required to have their own safety glasses and hard hats. No one is allowed access to the facility without safety glasses.

K. The Contractor will coordinate all safety requirements through the Owner's Project Administrator.

L. The Contractor, prior to the start of this project, will meet with all subcontractors and their employees and notify them of all requirements herein stated.

M. The General Contractor shall appoint a representative from among his employees, who will act as a safety representative in the absence of the Contractor's project manager.

N. The Contractor is ultimately responsible for all safety policy procedures regarding all construction employees.

O. The Contractor's employees must remain in their job site area and use only prescribed routes to and from project areas. The Owner's Administrator shall define approved routes, break areas, and toilet rooms (if any may be used.) Contractors or employees shall furnish their own tools. Under no condition will a non-employee be allowed to use any of the Owners tools or facilities without written approval.

3.2 PARKING

A. Construction worker parking will be provided by the Owner. Location will be provided upon award of Contract.

B. Owner assumes no responsibility for any personal effects, articles or property of any construction employee.

3.3 BARRICADES

A. The Owner will not provide any barricades as required by Contractor. Contractor is ultimately responsible for providing all barricades as may be necessary for excavation, open manholes, overhead work or to protect personnel from hazardous operations, moving equipment and all cranes as well as Owner approved type separator barriers between existing and new facilities. All barricades must be erected prior to any work beginning. Barricades that will be used at night or at twilight hours to protect walkways must be provided with blinking lights. All barricades are to be removed by the Contractor upon completion of work without compromising the operating conditions of Owner’s facility.

3.4 SCAFFOLDS

A. All scaffolds must meet requirements of Occupational Safety and Health Act. All scaffolding must be complete with standard handrail, mid-rail, and toeboard. All areas where scaffolding is present to have signs posted "Caution! Men Working Overhead".

3.5 LADDERS

A. All ladders must meet the requirements of Occupational Safety and Health Act and must be labeled properly with such requirements. Ladders are not to be used anywhere near electrical service. All ladders shall be properly tied or otherwise secured or fastened at top to prevent movement. All ladders shall be used in accordance with the manufacturer's requirements and only for the purpose in which they were intended.

B. All ladders in use in telephone, data, or other critical communications environment shall be non-metallic.

3.6 PERSONAL CONDUCT

A. Possession or drinking of alcoholic beverages, possession or use of illegal drugs, or failure to follow safety regulations will be sufficient cause for Owner to deny access to the facility of all violators. Fighting, gambling, horseplay, loud playing of radios or any other non-work activity will not be allowed on project site.

3.7 FIRE EXTINGUISHERS

A. Contractor is responsible for providing an adequate number of approved NFPA fire extinguishers for project area. Any areas where welding or cutting work is to be done must be provided with fire extinguishers meeting that requirement. All fire extinguishers are to be serviced and maintained in accordance with NFPA standards.

B. Contractor shall have one or more employees who are trained in the proper use of fire extinguishers within each work zone.

3.8 HOT WORK PERMIT

A. A Hot Work Permit is required any time spark producing equipment or fire equipment is to be used. "Hot Work" is defined as cutting, burning, welding, or the use of open flames or spark producing equipment. When a permit is issued, it will only be valid only on that specified date and time. A new Hot Work permit must be obtained for each day and shift.

B. All Contractors, Subcontractors or those others who will perform welding or cutting operations in buildings shall obtain a Hot Work Permit.

C. Obtain permit from the Owner's Representative or others so delegated by the Owner.

D. Prior to issuance of the permit the following procedures shall be followed:

1) Review, with person issuing permit and the duly established fire watch, the requirements listed on the permit and below:

(a) Continuously monitor work area for potential fire hazards or combustible material.

(b) Have in hand a portable fire extinguisher sized in accordance with the permit.

(c) Inspect work area after completion of operations for any live sparks or embers. Re-inspect after 1 hour and 4 hour after completion of operations. The contractor is required to be present for up to 4 hours after work is complete, as this is a requirement from the county.

2) Inspect work areas to ascertain that all procedures and requirements are being complied with.

(a) Note: Should welding/cutting operations be performed such that potential fire hazards may exist on other floors simultaneously, then additional fire watches shall be required as well as the follow-up inspections.

E. Protect combustible materials with non-combustible shield when welding/cutting operations are above or within 10 feet.

F. Gas supply tanks for welding/cutting shall be located at no greater distance than necessary for safety, and shall be securely fastened and in upright position where practicable. Such tanks shall be remotely stored from combustible materials and protected from sun's rays or temperatures in access of 125°F.

G. Maintain fire extinguishing equipment at hand as stated in Permit and inspect work area as specified.

3.9 EQUIPMENT LOCKOUT AND TAG

A. Owner's production equipment must be made inoperable before Contractor may work on or near it. Contractor must obtain approval from Owner's Project Administrator before shutting off any process equipment or any electrical or mechanical system. Lockout of equipment and tagging with "Danger" tags and final unlocking and removal of "Danger" tags must be performed by the Contractor. Owner must be notified of any interruption to or of service restored for any utility at least 1 week prior to planned interruption.

3.10 TOOLS AND EQUIPMENT

A. Contractor shall provide proper tools and equipment for the safe performance of all project work. Where welding is done, welding shields are to be provided and used by Contractor. All bottled gases for welding or cutting must be properly secure at all times. All equipment must meet OSHA standards. All electrical appliances must be properly grounded.

3.11 EXPLOSIVE ACTIVATED TOOLS

A. Explosive activated tools may be used provided they are low velocity piston-type. All employees using these powder activated tools must be properly trained in their use and have certification thereof. At the end of each day all powder activated tools must be checked to see that all safety devices are in proper working order.

3.12 FIRE SAFETY

A. Flammable liquids (gasoline, cleaning solvents) and flammable gases shall not be stored in the buildings. All flammable liquids must be stored in UL or Factory Mutual tanks and transported in safety cans. All materials that come in contact with paint, oil or grease must be kept in enclosed safety containers during the day and removed from the facility each day. All construction employees shall be fully aware of all fire alarm procedures and fire extinguishers on site and their proper use. In the event that a fire occurs, Contractor will evacuate the area and notify Owner's Security.

3.13 CRANES AND HOISTS

A. No construction material, crane or hoist are to be used lifting personnel. Cranes and hoists are to be operated only by qualified personnel and stored properly when not in use.

B. All cranes and hoists shall have labels from certified testing authorities indicating the lifting capacity for each hoist. Under no circumstances shall a crane or hoist be used for loads that exceed the lifting capacity of the crane or hoist.

3.14 CLOTHING

A. All construction workers must wear shirts, preferably with wrist length sleeves and long pants. All clothing and personal effects of all construction workers to be such that injury may not occur from loose clothing when operating power equipment. Should a Contractor be required to enter an active production area, the wearing of rings or jewelry will be prohibited. Hair nets may be required, safety glasses, beard covers where applicable, lab coats and protective clothing.

3.15 POWER OPERATED CONSTRUCTION VEHICLES AND EQUIPMENT

A. Electrical hydraulic or air-powered vehicles and equipment are preferred to be used within the building. Propane, diesel or gasoline powered vehicles and equipment are to be used only with prior approved permission from Owner. All power operated equipment must be properly maintained, operated only in areas where product and personnel safety can be maintained. Do not operate any power operated equipment near fresh air intakes. Engine powered equipment generating fumes must be properly vented to the outdoors.

3.16 HAZARDOUS SUBSTANCES OR CONDITIONS

A. The Contractor must cease work immediately upon discovery of hazardous materials such as chemicals, asbestos, etc., or hazardous conditions such as structural, mechanical and electrical failures. The Contractor must notify Owner immediately upon discovery of such conditions.

3.17 FIRST AID

A. The Contractor shall provide all first aid equipment and provide trained personnel for all of his employees as defined in OSHA standards. Contractor shall post a list containing the name, phone number and first aid person, doctor, hospital and ambulance at his trailer, desk or main tool trailer.

3.18 FIRE PROTECTION WORK

A. When a Contractor's work requires that the alarm system shall be taken out of service, the Contractor shall notify in writing, 24 hours in advance the Owner, that the system is scheduled to be shut off. All work must be scheduled so that the fire alarm and sprinkler system are to be returned to service by 3:30 p.m. of that day.

PART 4. SECURITY

4.1 SECURITY

A. All construction personnel are required to wear identification badges at all times while on the Owner's property. Identification badges will be provided on each day. All costs associated with the loss of the badge shall be borne by the Contractor at $100.00 each. No personnel will be allowed access to the facility without the proper identification badge.

1) All badges must be returned to Owner at the completion of each work day.

2) Badges are to be used for the specific project only. Access to other Company properties will be as needed with prior permission.

3) Badges will be issued for specific personnel only and will not be allowed to be transferred or altered.

B. Each Contractor must provide the Owner's Security Department, by noon of each Friday, the list of expected construction personnel who will be on-site the following week.

C. Construction vehicles or personal vehicles improperly parked or found on Company property without permission will be towed at the owner's expense.

D. Access to the facility by the Contractor after or before normal working hours is to be requested in writing 24 hours in advance. Notify Owner's Administrator and Security.

E. There will be no loitering after hours on Owner’s property.

F. No fire arms, alcohol or illegal drugs will be permitted on this property at any time.

G. Each Contractor is responsible for the safe storage of his own tools at all times. Owner is not liable for loss of tools.

H. Contractor shall coordinate and develop procedures for deliveries, vendor visits, etc.

I. The Contractor may at his option, provide a watchman at the job site during critical phases of the work at times other than normal working hours. The Contractor shall pay all costs related for this service.

END OF SECTION

SECTION 013200 – CONSTRUCTION PROGRESS DOCUMENTATION

PART 1 - GENERAL

1.1 RELATED DOCUMENTS

A. Drawings and general provisions of the Contract, including General and Supplementary Conditions, Bid Form and other Division 1 Specification Sections, apply to this Section.

1.2 SUMMARY

A. This section includes requirements for a bar chart schedule for the project construction activities, schedule of submittals and schedule for arrivals, milestones, testing/functional performance tests, commissioning, substantial completion, etc.

PART 2 - PRODUCTS – (Not Applicable)

PART 3 - EXECUTION

3.1 SUBMITTAL PROCEDURES

A. The Contractor shall submit to the Designer, within ten (10) working days following the Notice to Proceed, a progress schedule showing the rate of progress the Contractor agrees to maintain and the order in which he proposed to carry out the various phases of work. No payments shall be made to the Contractor until the progress schedule has been approved by the Owner.

B. The Contractor shall submit an updated schedule for presentation at each monthly progress meeting. The schedule shall be updated by the Contractor as necessary to reflect the current schedule and its relationship to the original schedule. The updated schedule shall reflect any changes in the logic, sequence, durations or completion date. Payments to the Contractor shall be suspended if the progress schedule is not adequately updated to reflect actual conditions.

C. The Contractor shall submit progress schedules to subcontractors to permit coordinating their progress schedules to the general construction work. The Contractor shall coordinate preparation and processing of schedules and reports with performance of other construction activities.

3.2 CONSTRUCTION PROGRESS SCHEDULE – BAR CHART SCHEDULE

A. Bar-Chart Schedule: The Contractor shall prepare a comprehensive, fully developed, horizontal bar-chart-type, contractor's construction schedule. The Contractor for General Construction shall prepare the construction schedule for the entire Project. The schedule shall show the percentage of work to be completed at any time, anticipated monthly payments by Owner, as well as significant dates (such as completion of excavation, concrete foundation work, underground lines, superstructure, rough-ins, enclosure, hanging of fixtures, etc.) which shall serve as check points to determine compliance with the approved schedule.

1. The Contractor shall provide a separate time bar for each significant construction activity. Provide a continuous vertical line to identify the first working day of each week.

a. If practical, use the same Schedule of Values breakdown for schedule time bars..

2. The Contractor shall provide a base activity time bar showing duration for each construction activity. Each bar is to indicate start and completion dates for the activity. The Contractor is to

place a contrasting bar below each original schedule activity time for indicating actual progress and planned remaining duration for the activity..

3. The Contractor shall prepare the schedule on a minimal number of separate sheets to readily show the data for the entire construction period.
4. Secure time commitments for performing critical elements of the Work from parties involved. Coordinate each element on schedule with other construction activities. Include minor elements involved in the overall sequence of the Work. Show each activity in proper sequence. Indicate graphically the sequences necessary for completion of related portions of the Work.
5. Coordinate the Contractor's Construction Schedule with the Schedule of Values, list of subcontracts, Submittal Schedule, progress reports, payment requests, and other required schedules and reports.
6. Indicate the Intent to Award and t he Contract Substantial Completion dates on the schedule.

B. Phasing: Provide notations on the schedule to show how the sequence of the Work is affected by the following:

1. Requirement for phased completion.
2. Work with vertical / horizontal boring
3. Pre-purchased materials
4. Coordination with existing construction.
5. Limitations of continued occupancies.
6. Un-interruptible services.
7. Partial occupancy prior to Substantial Completion.
8. Site restrictions.
9. Provisions for future construction.
10. Environmental control.

C. Work Stages: Use crosshatched bars to indicate important stages of construction for each major portion of the Work. Such stages include, but are not necessarily limited to, the following:

1. Subcontract awards.
2. Submittals.
3. Purchases.
4. Mockups.
5. Fabrication.
6. Sample testing.
7. Deliveries.
8. Installation.
9. Testing.
10. Adjusting.
11. Curing.
12. Startup and placement into final use and operation.

D. Area Separations: Provide a separate time bar to identify each major area of construction for each major portion of the Work. For the purposes of this Article, a "major area" is a story of construction, a separate building, or a similar significant construction element.

1. Indicate where each construction activity within a major area must be sequenced or integrated with other construction activities to provide for the following:

a. Structural Completion.
b. Permanent space enclosure.
c. Completion of mechanical installation.

d. Completion of the electrical portion of the Work.
e. Substantial Completion.

3.3 SCHEDULE OF SUBMITTALS

A. Upon acceptance of the Construction Progress Schedule, prepare and submit a complete schedule of submittals. Coordinate the submittal schedule with Section 013300 SUBMITTALS, the approved Construction Progress Schedule, list of subcontracts, Schedule of Values and the list of products.

B. Prepare the schedule in chronological order. Provide the following information

1. Scheduled date for the first submittal.
2. Related Section number.
3. Submittal category.
4. Name of the subcontractor.
5. Description of the part of the Work covered.
6. Scheduled date for resubmittal.
7. Scheduled date for the Designer's final release or approval.

C. Distribution: Following the Designer's response to the initial submittal schedule, print and distribute copies to the Designer, Owner, subcontractors, and other parties required to comply with submittal dates indicated.

1. Post copies in the temporary field office.
2. When revisions are made, distribute to the same parties and post in the same locations. Delete parties from distribution when they have completed their assigned part of the Work and are no longer involved in construction activities.

D. Schedule Updating: Revise the schedule after each meeting or other activity where revisions have been recognized or made. Issue the updated schedule concurrently with the report of each meeting.

3.4 SCHEDULE OF INSPECTIONS AND TESTS

A. Prepare a schedule of inspections, tests, and similar services required by the Contract Documents. Submit the schedule with 15 days of the date established for commencement of the Contract Work. The Contractor is to notify the testing agency at least 5 working days in advance of the required tests unless otherwise specified.

B. Form: This schedule shall be in tabular form and shall include, but not be limited to, the following:

1. Specification Section number.
2. Description of the test.
3. Identification of applicable standards
4. Identification of test methods.
5. Number of tests required.
6. Time schedule or time span for tests.
7. Entity responsible for performing tests.
8. Requirements for taking samples.
9. Unique characteristics of each service.
10. Results of tests

C. Distribution: Distribute the schedule to the Owner, Architect, and each party involved in performance of portions of the Work where inspections and tests are required.

END OF SECTION 013200

SECTION 0133 00 – SUBMITTAL PROCUDURES

PART 1 - GENERAL

1.1 RELATED DOCUMENTS

A. Drawings and general provisions of the Contract, including General and Supplementary Conditions, Bid Form and other Division 1 Specification Sections, apply to this Section.

1.2 SUMMARY

A. This Section includes administrative and procedural requirements for submittals required for performance of the Work, including the following:

1. Shop Drawings.
2. Product Data.
3. Samples.
4. Quality Assurance Submittals.
5. Warranties.

B. Administrative Submittals: Refer to General and Supplementary Conditions other applicable Division 1 Sections and other Contract Documents for requirements for administrative submittals. Such submittals include, but are not limited to, the following:

1. Construction Progress Schedule including Schedule of Values.
2. Performance and Payment Bonds.
3. Insurance certificates.
4. Applications for Payment.
5. Certified Payroll Reports.
6. Partial and Final Receipt of Payment and Release Forms.
7. Record Drawings.
8. Notification, Permits, etc.

C. The Contractor is obliged and responsible to check all shop drawings and schedules to assure compliance with contract plans and specifications. The Contractor is responsible for the content of the shop drawings and coordination with other contract work. Shop drawings and schedules shall indicate, in detail, all parts of an item or work, including erection and setting instructions and integration with the work of other trades.

D. The Contractor shall at all times make a copy, of all approved submittals, available on site to the Construction Representative.

1.3 SUBMITTAL PROCEDURES

A. The Contractor shall comply with the General and Supplementary Conditions and other applicable sections of the Contract Documents. The Contractor shall submit, with such promptness as to cause no delay in his work or in that of any other contractors, all required submittals indicated in Part 3.1 of this section and elsewhere in the Contract Documents. Coordinate preparation and processing of submittals with performance of construction activities. Transmit each submittal sufficiently in advance of performance of related construction activities to avoid delay.

1. Coordinate each submittal with fabrication, purchasing, testing, delivery, other submittals, and related activities that require sequential activity.

2. Coordinate transmittal of different types of submittals for related elements of the Work so processing will not be delayed by the need to review submittals concurrently for coordination.

   a. The A/E Designer reserves the right to withhold action on a submittal requiring coordination with other submittals until all related submittals are received.

B. Each drawing and/or series of drawings submitted must be accompanied by a letter of transmittal giving a list of the titles and numbers of the drawings. Each series shall be numbered consecutively for ready reference and each drawing shall be marked with the following information:

1. Date of Submission
2. Name of Project
3. Location
4. Section Number of Specification
5. State Project Number
6. Name of Submitting Contractor
7. Name of Subcontractor
8. Indicate if item is submitted as specified or as a substitution

1.4 ELECTRONIC SUBMITTALS

A. Documents submitted electronically, via email or media, shall comply with the following:

1. Email subject lines shall contain the project number, site name and a short description of the topic. Example Subject Line: 018-0609 Bluebird Underground -PVC Pipe.
2. Product submittals and shop drawings:
   a. Submittal files shall be named as “S-Division Number-Sequential Number”. Re-submittals shall begin with RS1, RS2, etc. Example File Name: S-051200-001.
3. Project Forms:
   a. DSI’s, RFI’s, RFP’s, etc. shall be named as “Form Name-Sequential Number-Short Description”. Example File Name: RFP 001-Add Repair.
4. Email Attachments:
   a. Due to mailbox size restrictions, attachments shall not be larger than 3 MB.
   b. An internet file delivery service shall be used for files exceeding 3 MB.
5. File Types: The preferred file type is Portable Document Format (PDF). Image files are less desirable, but also acceptable.
6. All electronic file documents shall be rotated and sized properly.

1.5 SHOP DRAWINGS

A. Comply with the General Conditions, Article 3.2.

B. The Contractor shall submit newly prepared information drawn accurately to scale. Highlight, encircle, or otherwise indicate deviations from the Contract Documents. Do not reproduce Contract Documents or copy standard information as the basis of Shop Drawings. Standard information prepared without specific reference to the Project is not a Shop Drawing.

C. Shop Drawings include fabrication and installation drawings, setting diagrams, schedules, patterns, templates and similar drawings. Include the following information.

1. Dimensions.
2. Identification of products and materials included by sheet and detail number.
3. Compliance with specified standards.
4. Notation of coordination requirements.
5. Notation of dimensions established by field measurement.
6. Sheet Size: Except for templates, patterns and similar full-size Drawings, submit Shop Drawings on sheets at least 8-1/2 by 11 inches but no larger than 36 by 48 inches (

1.6 PRODUCT DATA

A. The Contractor shall comply with the General Conditions, Article 3.2.

B. The Contractor shall collect Product Data into a single submittal for each element of construction or system. Product Data includes printed information, such as manufacturer's installation instructions, catalog cuts, standard color charts, roughing-in diagrams and templates, standard wiring diagrams, and performance curves.

1. Mark each copy to show applicable choices and options. Where printed Product Data includes information on several products that are not required, mark copies to indicate the applicable information. Include the following information:

a. Manufacturer's printed recommendations.
b. Compliance with trade association standards.
c. Compliance with recognized testing agency standards.
d. Application of testing agency labels and seals.
e. Notation of dimensions verified by field measurement.
f. Notation of coordination requirements.

2. Do not submit Product Data until compliance with requirements of the Contract Documents has been confirmed.

1.7 SAMPLES

A. The Contractor shall comply with the General Conditions, Article 3.2.

B. The Contractor shall submit full-size, fully fabricated samples, cured and finished as specified and physically identical with the material or product proposed. Samples include partial sections of manufactured or fabricated components, cuts or containers of materials, color range sets, and swatches showing color, texture, and pattern.

1. The Contractor shall mount or display samples in the manner to facilitate review of qualities indicated. Prepare samples to match the Designer's sample. Include the following:

a. Specification Section number and reference.
b. Generic description of the Sample
c. Sample source.
d. Product name or name of the manufacturer.
e. Compliance with recognized standards.
f. Availability and delivery time.

2. The Contractor shall submit samples for review of size, kind, color, pattern, and texture. Submit samples for a final check of these characteristics with other elements and a comparison of these characteristics between the final submittal and the actual component as delivered and installed.

a. Where variation in color, pattern, texture, or other characteristic is inherent in the material or product represented, submit at least 3 multiple units that show approximate limits of the variations.
b. Refer to other Specification Sections for requirements for samples that illustrate workmanship, fabrication techniques, details of assembly, connections, operation and similar construction characteristics.
c. Refer to other Sections for samples to be returned to the Contractor for incorporation in the Work. Such samples must be undamaged at time of use. On the transmittal, indicate special requests regarding disposition of sample submittals.
d. Samples not incorporated into the Work, or otherwise designated as the Owner's property, are the property of the Contractor and shall be removed from the site prior to Substantial Completion.

3. Field samples are full-size examples erected on-site to illustrate finishes, coatings, or finish materials and to establish the Project standard.

a. The Contractor shall comply with submittal requirements to the fullest extent possible. The Contractor shall process transmittal forms to provide a record of activity.

1.8 QUALITY ASSURANCE DOCUMENTS

A. The Contractor shall comply with the General Conditions, Article 3.2

B. The Contractor shall submit quality-control submittals, including design data, certifications, manufacturer's instructions, manufacturer's field reports, and other quality-control submittals as required under other Sections of the Specifications.

C. Certifications: Where other Sections of the Specifications require certification that a product, material, or installation complies with specified requirements, submit a notarized certification from the manufacturer certifying compliance with specified requirements.

1. Signature: Certification shall be signed by an officer of the manufacturer or other individual authorized to contractually bind the company.

D. Inspection and Test Reports: The Contractor shall submit the required inspection and test reports from independent testing agencies as specified in this section and in other sections of the Contract Documents.

PART 2 - PRODUCTS (Not Applicable)

PART 3 - EXECUTION

3.1 REQUIRED SUBMITTALS

Contractor shall submit the following information for materials and equipment to be provided under this contract.

The list below will be filled out by A/E during procurement and shop drawing phase.

		TYPE OF SUBMITTAL											
SECTION	DESCRIPTION	Shop Drawings/Schedules	Product Data	Samples	Certifications/Qualifications	Manufacturer' s Instructions	Test /Research Reports	Inspection Report	Wiring Diagrams	Record Photographs	Maintenance Data	Operating Instruction	Warranty
032000	CONCRETE REINFORCING	X	X				X	X		X			
033000	CAST-IN-PLACE CONCRETE	X					X	X		X			
042000	UNIT MASONRY		X				X	X					
051200	STRUCTURAL STEEL FRAMING	X	X				X	X					
052100	STEEL JOIST FRAMING	X	X				X	X					
053100	STEEL DECKING		X				X	X					
054000	COLD-FORMED METAL FRAMING		X				X	X					
055000	METAL FABRICATIONS		X				X	X					
055113	METAL PAN STAIRS		X										
057300	DECORATIVE METAL RAILINGS		X	X									
061053	MISCELLANEOUS ROUGH CARPENTRY		X										
061600	SHEATHING		X										
064023	INTERIOR ARCHITECTURAL WOODWORK		X	X									
064116	PLASTIC-LAMINATE-FACED ARCHITECTURAL CABINETS		X	X									
071326	SELF-ADHERING SHEET WATERPROOFING		X										
072100	THERMAL INSULATION		X										
072119	FOAMED-IN-PLACE INSULATION		X										
072726	FLUID-APPLIED MEMBRANE AIR BARRIERS		X										
074113.19	BATTEN-SEAM METAL ROOF PANELS		X		X								

074213.13	FORMED METAL WALL PANELS		X	X	X								
074213.19	INSULATED METAL WALL PANELS		X	X	X								
074217	INSULATED-CORE METAL WALL BACKUP PANEL SYSTEM		X	X	X								
074293	METAL SOFFIT PANELS		X	X								X	X
075419	POLYVINYL-CHLORIDE (PVC) ROOFING		X	X								X	X
076200	SHEET METAL FLASHING		X									X	X
077100	ROOF SPECIALTIES		X										
077129	MANUFACTURED ROOF EXPANSION JOINTS		X										
077200	ROOF ACCESSORIES		X										
077210	ROOFTOP FALL ARREST SYSTEM		X										
077253	SNOW GUARDS		X										
078410	THROUGH-PENETRATION FIRESTOPPING		X										
078443	JOINT FIRESTOPPING		X										
079200	JOINT SEALANTS		X										
079513.13	INTERIOR EXPANSION JOINT COVER ASSEMBLIES		X										
079513.16	EXTERIOR EXPANSION JOINT COVER ASSEMBLIES		X										
081113	HOLLOW METAL DOORS AND FRAMES	X	X										
081416	FLUSH WOOD DOORS	X	X										
083113	ACCESS DOORS AND FRAMES	X	X										
083313	COILING COUNTER DOORS	X	X										
083310	OVERHEAD COILING DOORS		X									X	X
083459	VAULT DOORS AND DAY GATES	X	X			X			X			X	X
084113	ALUMINUM-FRAMED ENTRANCES AND STOREFRONTS		X										
084413	GLAZED ALUMINUM CURTAIN WALLS		X		X								
084523	FIBERGLASS SANDWICH PANEL ASSEMBLIES		X		X								
087110	DOOR HARDWARE		X			X			X			X	
088000	GLAZING		X	X	X								X

089119	FIXED LOUVERS		X										
092216	NON-STRUCTURAL METAL FRAMING		X										
092600	GYPSUM BOARD ASSEMBLIES		X										
095113	ACCOUSTICAL PANEL CEILINGS		X										
096513	RESILIENT BASE AND ACCESSORIES		X	X									
096519	RESILIENT TILE FLOORING		X	X									
096723	RESINOUS FLOORING		X	X	X								
096813	TILE CARPETING		X	X									
098436	SOUND-ABSORBING CEILING UNITS		X	X									
099000	PAINTING		X	X									
101100	VISUAL DISPLAY UNITS		X										
101423	PANEL SIGNAGE		X										
102113.19	PLASTIC TOILET COMPARTMENTS		X	X									
102213	WIRE MESH PARTITIONS		X										
102226	FOLDING PARTITION PANELS		X										
102800	TOILET, BATH, AND LAUNDRY ACCESSORIES		X										
104413	FIRE PROTECTION CABINETS		X										
104416	FIRE EXTINGUISHERS		X										
105113	METAL LOCKERS		X	X									
122413	ROLLER WINDOW SHADES		X										
123661.16	SOLID SURFACING COUNTERTOPS		X	X									
123661.19	QUARTZ AGGLOMERATE COUNTERTOPS		X	X									
142123.16	MACHINE ROOM-LESS ELECTRIC TRACTION PASSENGER ELEVATORS	X	X		X	X	X		X			X	X
21 1300	FIRE SUPPRESSION SYSTEM	X	X		X		X		X			X	
22 0519	PLUMBING METERS AND GAUGES		X										
22 0523	PLUMBING VALVES		X										
22 0529	PLUMBING SUPPORTS & ANCHORS		X										
22 0553	PLUMBING MECHANICAL IDENTIFICATION		X										
22 0719	PLUMBING PIPING INSULATION		X										

22 1100	PLUMBING PIPING		X				X						
22 1116	DOMESTIC WATER PIPING		X				X						
22 1119	DOMESTIC WATER PIPING SPECIALTIES		X										
221124	DOMESTIC WATER PUMPS		X				X						
22 1316	SANITARY WASTE AND VENT PIPING		X				X			X			
22 1319	SANITARY WASTE PIPING SPECIALTIES		X							X			
22 1429	SUMP PUMPS AND BASINS	X	X							X			
22 3500	DOMESTIC WATER HEAT EXCHANGERS		X									X	X
22 4200	PLUMBING FIXTURES & ACCESSORIES		X										
22 4500	EMERGENCY PLUMBING FIXTURES		X										
23 0519	MECHANICAL METERS AND GAUGES		X										
23 0523	MECHANICAL VALVES		X										
23 0529	HVAC SUPPORTS & ANCHORS		X										
23 0553	HVAC MECHANICAL IDENTIFICATION												
23 0593	TESTING, ADJUSTING, & BALANCING FOR HVAC		X		X		X	X					
23 0713	HVAC DUCT INSULATION		X										
23 0719	MECHANICAL PIPING INSULATION		X										
23 0923	DIRECT DIGITAL CONTROL SYSTEM	X	X		X	X	X		X			X	
23 1123	NATURAL GAS PIPING		X				X						
23 2113	HYDRONIC PIPING		X				X						
23 2116	HYDRONIC PIPING SPECIALTIES		X										
23 2300	REFRIGERANT PIPING		X				X						
23 2315	REFRIGERATION SPECIALTIES		X										
23 2500	WATER TREATMENT (MECHANICAL PIPING)		X		X								
23 3113	HVAC DUCTWORK	X	X				X						
23 3300	AIR DUCT ACCESSORIES		X										
23 3416	CENTRIFUGAL EXHAUST FANS					X						X	
23 3600	MECHANICAL AIR TERMINAL								X			X	

	DEVICES												
23 3713	HVAC DIFFUSERS REGISTERS GRILLES		X									X	
23 3723	HVAC GRAVITY VENTILATORS		X									X	
23 3813	KITCHEN EXHAUST SYSTEMS	X	X		X	X			X			X	X
23 7313	AIR HANDLING UNITS WITH COILS	X	X		X	X			X			X	
23 8123	COMPUTER-ROOM AIR-CONDITIONERS		X		X	X			X			X	X
23 8220	FAN COIL UNITS AND UNIT VENTILATORS		X			X			X			X	
260519	LOW-VOLTAGE ELECTRICAL POWER CONDUCTORS AND CABLES		X										
260523	CONTROL WIRING AND DEVICES		X			X			X				X
260526	GROUNDING AND BONDING FOR ELECTRICAL SYSTEMS		X				X						X
260529	HANGERS AND SUPPORTS FOR ELECTRICAL SYSTEMS		X										
260533	RACEWAY AND BOXES FOR ELECTRICAL SYSTEMS		X										
26 0553	IDENTIFICATION FOR ELECTRICAL SYSTEMS		X	X									
26 0913	ELECTRICAL POWER MONITORING AND CONTROL		X			X						X	
26 0923	LIGHTING CONTROL DEVICES		X			X			X			X	
26 0926	NETWORK LIGHTING CONTROLS		X			X			X			X	
26 0936	MODULAR DIMMING CONTROLS		X			X			X			X	
26 2200	LOW VOLTAGE TRANSFORMERS		X						X				
26 2213	LOW VOLTAGE DISTRIBUTION PANELBOARDS	X	X		X				X				
26 2300	LOW VOLTAGE SWITCHGEAR	X	X		X		X		X			X	
26 2413	INTEGRATED POWER CENTER	X	X		X				X			X	
26 2416	PANELBOARDS	X	X		X				X				
262726	WIRING DEVICES		X						X				
262816	ENCLOSED SWITCHES AND CIRCUIT BREAKERS		X						X				
26 2923	VARIABLE FREQUENCY DRIVES	X	X			X			X			X	X
263213	ENGINE GENERATORS	X	X		X	X	X		X			X	X
26 3600	AUTOMATIC TRANSFER SWITCH		X			X	X		X			X	X

26 4313	TRANSIENT VOLTAGE SURGE PROTECTORS		X		X	X	X		X			X	X
265100	INTERIOR LIGHTING		X										X
265619	EXTERIOR LIGHTING		X										X
27 1100	COMMUNICATIONS EQUIPMENT ROOM FITTINGS		X										
27 1500	COMMUNICATIONS HORIZONTAL CABLING		X										
27 2500	CABLE TRAY		X										
28 3100	MASS NOTIFICATION FIRE ALARM SYSTEM	X	X		X	X	X	X	X			X	
31 1000	CLEARING AND GRUBBING												
31 2000	EXCAVATION AND EMBANKMENT												
31 2319	DEWATERING												
31 2500	EROSION AND SEDIMENT CONTROL		X										
32 1123	CRUSHED AGGREGATE BASE COURSE		X										
32 1216	HOT MIX ASPHALT PAVING		X										
32 1313	CEMENT CONCRETE PAVEMENT		X										
32 1723	PAVEMENT MARKINGS		X										
32 9200	TOPSOILING						X						
32 9210	TURF SODDING		X		X								
32 9220	TURF SEEDING		X		X								
32 9300	TREES. SHRUBS, AND GROUNDCOVER		X		X								X
33 1123	NATURAL GAS DISTRIBUTION												
33 4000	PIPE FOR STORM DRAINS AND CULVERTS		X										
34 4114	TRAFFIC CONTROL												

END OF SECTION 013300

SECTION 014000 - QUALITY CONTROL

PART 1 - GENERAL

1.1 SUMMARY

A. This Section specifies administrative and procedural requirements for quality control services.

B. Quality control services include inspections and tests and related actions including reports, performed by independent agencies, governing authorities, and the Contractor. They do not include Contract enforcement activities performed by the Owner's Representative.

C. Inspection and testing services are required to verify compliance with requirements specified or indicated. These services do not relieve the Contractor of responsibility for compliance with Contract Document requirements.

D. Requirements of this Section relate to customized fabrication and installation procedures, not production of standard products.

E. Specific quality control requirements for individual construction activities are specified in the Sections that specify those activities. Those requirements, including inspections and tests, cover production of standard products as well as customized fabrication and installation procedures.

F. Inspections, test and related actions specified are not intended to limit the Contractor's quality control procedures that facilitate compliance with Contract Document requirements.

G. Requirements for the Contractor to provide quality control services required by the Owner's Representative, Owner, or authorities having jurisdiction are not limited by provisions of this Section.

1.2 RESPONSIBILITIES

A. Contractor Responsibilities: The Contractor shall provide inspections, tests and similar quality control services, specified in individual Specification Sections and required by governing authorities. Costs for these services shall be included in the Contract Sum.

B. The Contractor shall employ and pay an independent agency, to perform specified quality control services.

C. Retesting: The Contractor is responsible for retesting where results of required inspections, tests or similar services prove unsatisfactory and do not indicate compliance with Contract Document requirements, regardless of whether the original test was the Contractor's responsibility.

D. Cost of retesting construction revised or replaced by the Contractor is the Contractor's responsibility, where required tests were performed on original construction.

E. Associated Services: The Contractor shall cooperate with agencies performing required inspections, tests and similar services and provide reasonable auxiliary services as requested. Notify the agency sufficiently in advance of operations to permit assignment of personnel. Auxiliary services required include but are not limited to:

1) Providing access to the Work and furnishing incidental labor and facilities necessary to facilitate inspections and tests.

2) Taking adequate quantities of representative samples of materials that require testing or assisting the agency in taking samples.

3) Providing facilities for storage and curing of test samples, and delivery of samples to testing laboratories.

4) Providing the agency with a preliminary design mix proposed for use for materials mixes that require control by the testing agency.

5) Security and protection of samples and test equipment at the Project site.

F. Duties of the Testing Agency: The independent testing agency engaged to perform inspections, sampling and testing of materials and construction specified in individual Specification Sections shall cooperate with the Owner's Representative and Contractor in performance of its duties, and shall provide qualified personnel to perform required inspections and tests.

G. The agency shall notify the Owner's Representative and Contractor promptly of irregularities or deficiencies observed in the Work during performance of its services.

H. The agency is not authorized to release, revoke, alter or enlarge requirements of the Contract Documents, or approve or accept any portion of the Work.

I. The agency shall not perform any duties of the Contractor.

J. Coordination: The Contractor and each agency engaged to perform inspections, tests and similar services shall coordinate the sequence of activities to accommodate required services with a minimum of delay. In addition the Contractor and each agency shall coordinate activities to avoid the necessity of removing and replacing construction to accommodate inspections and tests.

K. The Contractor is responsible for scheduling times for inspections, tests, taking samples and similar activities.

1.3 SUBMITTALS

A. The independent testing agency shall submit a certified written report of each inspection, test or similar service, to the Owner's Representative, in duplicate, unless the Contractor is responsible for the service. If the Contractor is responsible for the service, submit a certified written report of each inspection, test or similar service through the Contractor, in duplicate.

B. Submit additional copies of each written report directly to the governing authority, when the authority so directs.

C. Report Data: Written reports of each inspection, test or similar service shall include, but not be limited to:

1) Date of issue.

2) Project title and number.

3) Name, address and telephone number of testing agency.

4) Dates and locations of samples and tests or inspections.

5) Names of individuals making the inspection or test.

6) Designation of the Work and test method.

7) Identification of product and Specification Section.

8) Complete inspection or test data.

9) Test results and an interpretations of test results.

10) Ambient conditions at the time of sample-taking and testing.

11) Comments or professional opinion as to whether inspected or tested Work complies with Contract Document requirements.

12) Name and signature of laboratory inspector.

13) Recommendations on retesting.

1.4 QUALITY ASSURANCE

A. Qualification for Service Agencies: Engage inspection and testing service agencies, including independent testing laboratories, which are prequalified as complying with "Recommended Requirements for Independent Laboratory Qualification" by the American Council of Independent Laboratories, and which specialize in the types of inspections and tests to be performed.

B. Each independent inspection and testing agency engaged on the Project shall be authorized by authorities having jurisdiction to operate in the State in which the Project is located.

PART 2 - PRODUCTS (NOT APPLICABLE)

PART 3 - EXECUTION

3.1 REPAIR AND PROTECTION

A. General: Upon completion of inspection, testing, sample-taking and similar services, repair damaged construction and restore substrates and finishes to eliminate deficiencies, including deficiencies in visual qualities of exposed finishes. Comply with Contract Document requirements for "Cutting and Patching."

B. Protect construction exposed by or for quality control service activities, and protect repaired construction.

C. Repair and protection is the Contractor's responsibility, regardless of the assignment of responsibility for inspection, testing or similar services.

END OF SECTION 014000

SECTION 015000 - TEMPORARY FACILITIES AND SERVICES

PART 1 - GENERAL

1.01 SUMMARY

A. Section Includes:
1. Temporary utilities.
2. Temporary construction.
3. Protective facilities.
4. Employee facilities.
5. Administrative facilities.
6. Temporary services.
7. Required temporary facilities and services include but are not limited to:
   a. Drinking water facilities.
   b. Dust control services.
   c. Fire protection facilities, other than piped utilities.
   d. Public protective facilities required by law.
   e. Termite extermination services.
   f. Safety fence.
   i. Waste disposal service.
   j. Water supply.
      1. Include water service and sewer usage charges.
   k. Use of permanent water service.
   l. Cooling.
      2. Include cost of power used.
   m. Use of permanent heating, cooling, and ventilating systems.
   n. Electrical service, except extension cords.
      1. Include electric service usage charges.
   o. Temporary lighting.

1.02 SUBMITTALS

A. Copies of permits required by public authorities.

1.03 QUALITY ASSURANCE

A. Comply with requirements of governing authorities, as to type, quantity, location, and use of temporary facilities.

B. Comply with requirements of governing authorities, as to type and frequency of temporary services.

C. Comply with requirements of public utilities affected.

1.04 PROJECT CONDITIONS

A. Obtain easements where required.

B. Use of permanent facilities prior to substantial completion is subject to the owner's approval and conditions.
1. Each permanent facility used for construction purposes shall be operated, maintained, and protected during such use by the original installer.

2. Specified warranties shall not be reduced or voided by temporary use.

1.05 SEQUENCING AND SCHEDULING

A. Maintain required facilities until not needed or until shortly before substantial completion; remove facilities before substantial completion.
   1. Exception: Where use of permanent facilities is allowed.

B. Change over to use of permanent facilities, when applicable, as soon as possible, except when use of permanent facilities is not allowed.

PART 2 - PRODUCTS

2.01 MATERIALS

A. General: Provide materials which are both suitable for the use and durable enough to withstand the use and abuse to be expected.

B. Temporary Heating Units: UL labeled for the fuel used; do not use gasoline-burning, open burning, or solid fuel heaters or salamanders.
   1. Use equipment that is known to be safe and that will not damage work in progress.

2.02 TEMPORARY UTILITIES

A. Utilities:
   1. All temporary utilities will be paid for by the contractor.
   2. All permanent utilities will be paid for by the owner (i.e. city utility service, if required).

2.03 PROTECTIVE FACILITIES

A. Fire Protection Facilities: Provide at least the temporary facilities required by the authorities having jurisdiction.
   1. Fire extinguishers to be installed in the completed building shall not be used during construction.
   2. Put permanent facilities into operation as soon as possible.

2.04 EMPLOYEE FACILITIES

A. Temporary Lighting: Provide at least the lighting required by law.

2.05 ADMINISTRATIVE FACILITIES

A. Telephone Service:
   1. Provide at least one cellular on site.
   2. Display construction-related phone numbers at each phone.
      a. Fire emergency number.
      b. Rescue emergency number.
      c. Physician.
      d. Contractor's home office.
      e. Owner's representative.
      f. Architect's/Engineer’s representative.
      g. Major subcontractors' home offices.

2.06 TEMPORARY CONSTRUCTION

A. Temperature Control and Ventilation Facilities: Provide adequate facilities:
   1. To provide proper conditions for installation.
   2. For drying and curing of completed work.
   3. For protection from deterioration due to high or low temperatures and humidities.
   4. To provide suitable working conditions.
   5. Permanent equipment and facilities may be used.

B. Temporary Enclosures for Weather Resistance: When building enclosure is not yet complete but interior construction may be damaged by weather, provide temporary enclosures adequate to keep out weather.

PART 3 - EXECUTION

3.01 GENERAL

A. Cooperate with other contractors in location of temporary facilities.

3.02 TEMPORARY SERVICES

A. Waste Disposal Service: Provide contracted removal service at regular intervals.
   1. Remove waste at least once a week.
   2. When temperature exceeds or is expected to exceed 80 degrees F, remove at least twice a week.
   3. Provide waste collection containers for use of all contractors.

B. Dust Control Services: Keep down dust on a regular basis. This may involve routine water spraying of areas around cave space construction site.

C. Extermination Service: Provide termite extermination services.
   1. Exterminate below concrete footings before footings are poured.

3.03 TERMINATION AND REMOVAL

A. Remove temporary facilities when no longer needed, or when use of appropriate permanent facility is approved, but not later than substantial completion.
   1. Exception: When longer usage is requested by the architect or owner.

B. Complete permanent work delayed until removal of temporary facilities.

C. Permanent Facilities Used during Construction: Clean; replace parts that are worn in excess of that expected during normal usage.

END OF SECTION 015000

SECTION 016310 - PRODUCT SUBSTITUTIONS

PART 1 - GENERAL

1.1 SUMMARY

A. This Section specifies administrative and procedural requirements for handling requests for substitutions made after award of the Contract.

B. The Contractor's Construction Schedule and the Schedule of Submittals are included under Section "Submittals."

C. Standards: Refer to Section "Definitions and Standards" for applicability of industry standards to products specified.

D. Procedural requirements governing the Contractor's selection of products and product options are included under Section "Materials and Equipment.

1.2 DEFINITIONS

A. Definitions used in this Article are not intended to change or modify the meaning of other terms used in the Contract Documents.

B. Substitutions: Requests for changes in products, materials, equipment, and methods of construction required by Contract Documents proposed by the Contractor after award of the Contract are considered requests for "substitutions." The following are not considered substitutions:

1) Substitutions requested by Bidders during the bidding period, and accepted prior to award of Contract, are considered as included in the Contract Documents and are not subject to requirements specified in this Section for substitutions.

2) Revisions to Contract Documents requested by the Owner or the Owner’s Representative.

3) Specified options of products and construction methods included in Contract Documents.

4) The Contractor's determination of and compliance with governing regulations and orders issued by governing authorities.

1.3 SUBMITTALS

A. Bid Period: The Owner will consider substitutions of equipment and material by manufacturers other than those listed in the specifications as follows:

1) Substitutions shall be submitted at the time of the bid opening and shall accompany the construction bid. Substitutions shall be submitted on a separate letterhead of the invited bidders. Substitutions shall not be submitted or noted on the Construction Bid Form.

2) Substitutions shall be listed by manufacturer catalog number and all other information necessary for comparison and the amount to be DEDUCTED or ADDED to the contract sum shall be stated for each item.

B. Substitution Request Submittal: Requests for substitution will be considered if received within a reasonable time prior to the commencement of the Work as defined by the Construction Manager. This shall be 3 days prior to bid. Requests received after the commencement of the Work may be considered or rejected at the discretion of the Owner’s Representative.

C. Submit a copy of each request for substitution for consideration. Submit requests in the form and in accordance with procedures required for Change Order proposals.

D. Identify the product, or the fabrication or installation method to be replaced in each request. Include related Specification Section and Drawing numbers. Provide complete documentation showing compliance with the requirements for substitutions, and the following information, as appropriate:

1) Product Data, including Drawings and descriptions of products, fabrication and installation procedures.

2) Samples, where applicable or requested.

3) A detailed comparison of significant qualities of the proposed substitution with those of the Work specified. Significant qualities may include elements such as size, weight, durability, performance and visual effect.

4) Coordination information, including a list of changes or modifications needed to other parts of the Work and to construction performed by the Owner and separate Contractors, that will become necessary to accommodate the proposed substitution.

5) A statement indicating the substitution's effect on the Contractor's Construction Schedule compared to the schedule without approval of the substitution. Indicate the effect of the proposed substitution on overall Contract Time.

6) Cost information, including a proposal of the net change, if any in the Contract Sum.

7) Certification by the Contractor that the substitution proposed is equal-to or better in every significant respect to that required by the Contract Documents, and that it will perform adequately in the application indicated. Include the Contractor's waiver of rights to additional payment or time, that may subsequently become necessary because of the failure of the substitution to perform adequately.

E. Architect's/Engineer’s Action: Within one day of receipt of the request for substitution, the Architect/Engineer will request additional information or documentation necessary for evaluation of the request. Within two weeks of receipt of the request, or one week of receipt of the additional information or documentation, whichever is later, the Architect/Engineer will notify the Contractor of acceptance or rejection of the proposed substitution. If a decision on use of a proposed substitute cannot be made or obtained within the time allocated, use the product specified by name. Acceptance will be in the form of a Change Order.

PART 2 - PRODUCTS

2.1 SUBSTITUTIONS

A. Conditions: The Contractor's substitution request will be received and considered by the Owner’s Representative when one or more of the following conditions are satisfied, as determined by the Owner’s Representative; otherwise requests will be returned without action except to record noncompliance with these requirements.

1) Extensive revisions to Contract Documents are not required.

2) Proposed changes are in keeping with the general intent of Contract Documents.

3) The request is timely, fully documented and properly submitted.

4) The request is directly related to an "or equal" clause or similar language in the Contract Documents.

5) The specified product or method of construction cannot be provided within the Contract Time. The request will not be considered if the product or method cannot be provided as a result of failure to pursue the Work promptly or coordinate activities properly.

6) The specified product or method of construction cannot receive necessary approval by a governing authority, and the requested substitution can be approved.

7) A substantial advantage is offered the Owner, in terms of cost, time, energy conservation or other considerations of merit, after deducting offsetting responsibilities the Owner may be required to bear. Additional responsibilities for the Owner may include additional compensation to the Architect/Engineer for redesign and evaluation services, increased cost of other construction by the Owner or separate Contractors, and similar considerations.

8) The specified product or method of construction cannot be provided in a manner that is compatible with other materials, and where the Contractor certifies that the substitution will overcome the incompatibility.

9) The specified product or method of construction cannot be coordinated with other materials, and where the Contractor certifies that the proposed substitution can be coordinated.

10) The specified product or method of construction cannot provide a warranty required by the Contract Documents and where the Contractor certifies that the proposed substitution provide the required warranty.

B. The Contractor's submittal and Architect's/Engineer’s acceptance of Shop Drawings, Product Data or Samples that relate to construction activities not complying with the Contract Documents does not constitute an acceptable or valid request for substitution, nor does it constitute approval.

C. Any piece of equipment, article, product, or fixture furnished as a substitute or equivalent to that specified or indicated shall fit the available space allotted and shall allow adequate space around the item for proper connections of piping, ductwork, electrical, etc., for convenient inspection, servicing and maintenance without causing undue hardship. It shall be the responsibility of the Contractor, and the manufacturer or his representative to check the available space allotted to assure that the proposed item will meet these conditions before submittal for approval.

D. Wiring, connections, circuit protection, sizes and capacity, for equipment or devices that requires electrical power is based on the equipment specified and indicated on drawings. If equipment provided as an equivalent or substitute requires an increase in the wiring, connections, circuit protection, or other installation over that indicated, or specified, or required by the equipment specified or indicated, then it shall be the responsibility of the Contractor to provide all necessary increases at his expense and at no additional costs to the contract.

PART 3 - EXECUTION (NOT APPLICABLE)

END OF SECTION 016310

SECTION 017000 – CONSTRUCTION PROCEDURES

PART 1 – GENERAL

1.01 SUMMARY

A. Section Includes:

1. General construction and installation procedures
2. Correction of defective work.
3. Cleaning during construction.
4. Facility startup.
5. Instruction of the owner's personnel.
6. Project completion procedures.
7. Final extermination.
8. Final cleaning.

1.02 DEFINITIONS

A. Concealed Spaces: Spaces which are not accessible after completion of construction.

B. Damage: Any sort of deterioration whether due to weather, normal wear and tear, accident, or abuse, resulting in soiling, marring, breakage, corrosion, rotting, or impairment of function.

C. Debris: Rubbish, waste materials, litter, volatile wastes, and similar materials, with the exception of surplus materials which are to become the property of the owner.

D. Fire Barriers: Any wall, floor, ceiling, or roof which is indicated as having a fire resistance rating.

E. Operational Elements: Equipment, moving parts, electrical conductors, sound and vibration control materials, waterproofing, vapor retarders, piping, ducts, tanks, and other similar materials and components which convey or retard the passage of liquids, gases, heat, light, persons, animals, or insects or which perform a similar function; not including structural elements.

1. Safety Related Elements: Materials and assemblies whose principal function is the promotion of the safety of the building and its occupants, including fire and smoke barriers, fireproofing, emergency egress doors and windows, guardrails, equipment guards, and other similar construction.

F. Smoke Barriers: Any wall, floor, ceiling, or roof which is indicated as being designed to prevent passage of smoke and gases; may be indicated as "smoke barrier," "smoke partitions," "smoke wall," or similar designation.

G. Spaces Not Normally Occupied: Accessible spaces such as roofs, accessible plenums and shafts, accessible spaces above ceilings, trenches, equipment vaults, manholes, accessible attics, and similar spaces, but not including the interior of duct or concealed spaces.

1.03 SUBMITTALS

A. Field Correction Requests: Submit immediately upon discovery of deviation required; include a detailed description of the problem, recommended changes, and reasons it is not possible to comply with the contract documents.

B. Certificate of Final Extermination.

C. Startup Reports:

1. Submit within 7 days after startup of item covered by report
2. Include a statement that the item has been installed properly and is functioning correctly
3. Include the following information:
   a. Item started operation.
   b. Date of startup operation.
   c. Entity performing startup.
   d. Applicable specification section.
   e. Results of startup.
   f. Signature of person performing startup.

D. Demonstration Reports:

1. Submit within 7 days after each demonstration period.
2. Include the following information:
   a. Description of equipment or system demonstrated, cross-referenced to the contract documents.
   b. Date of demonstration.
   c. Name and title of person performing demonstration.
   d. Name, title, and signature of person observing demonstration.

E. Instruction Reports:

1. Submit within 7 days after each instruction period.
2. Include the following information:
   a. Description of instruction provided, cross-referenced to the contract documents.
   b. Date(s) and duration of instruction.
   c. Names and titles of persons performing instruction.
   d. Names, titles, and signatures of persons receiving instruction.

1.04 QUALITY ASSURANCE

A. Cleaning: Perform cleaning in accordance with the recommendations of the manufacturer or fabricator of the product or system. Use only cleaning materials and tools which are specifically recommended, which are not hazardous to health or property, and which will not damage finishes.

1.05 PROJECT CONDITIONS

A. Take precautions to prevent fires and to facilitate fire-fighting operations.

1. Keep flammable materials in non-combustible containers; store away from potential fire sources; remove flammable waste regularly.
2. Keep temporary and permanent fire fighting facilities readily accessible; keep fire fighting routes open.
3. Do not allow smoking in areas where highly combustible or explosive materials are present.
4. Carefully supervise the operation of potential fire sources, including heating units.
5. Conduct welding operations in manner to prevent fire; comply with local regulations.

B. Take precautions to prevent accidents due to physical hazards:

1. Provide barricades, warning lights, or signs as required to inform personnel and the public of the hazard being protected against.
2. Safety barricades: Comply with regulations.
3. Provide temporary walkways where walking surfaces are hazardous.

C. Take care to prevent pollution of air, water, and soil.

1. Comply with environmental protection regulations.
2. Limit effluent and rainwater runoff into waterways as required by regulations.
3. Do not dump contaminants in areas that will result in contamination of waterways.

D. Minimize discharge of effluent and rainwater runoff into sewers.

1. Control sediment discharge into sewers; filter out construction debris, soil, and contaminants.
2. Comply with regulations and orders of public utilities regarding use of sewers.
3. Where disposal of effluent or rainwater by means of sewers is not lawful or is not possible, provide alternative methods of disposal.

E. Prevent erosion due to rainwater runoff.

F. Control windblown dust; prevent erosion to site and nuisance to neighbors.

G. Prevent flooding of excavations, below grade construction, and adjacent properties due to rainwater runoff.

H. Protect existing property indicated to remain, including:

1. Plants and trees, as indicated on the drawings and as identified by owner. Erect fencing around drip lines of trees. Areas within the drip lines of trees shall be off limits to construction activities including but not limited to parking and storage of materials.
2. Existing property, as indicated on the drawings.

I. Do not use tools or equipment which produce harmful levels of noise.

J. Keep the site and adjacent public ways free of hazardous and unsanitary conditions and public nuisances.

K. Control rodents and other pests; prevent infestation of adjacent sites and buildings due to pests on this site.

L. Keep public streets free of debris and material storage due to this work.

M. Provide adequate traffic control by means of signs, signals, and flagmen, as necessary.

N. Provide temporary means of draining roofs where required.

O. Conduct construction operations so that no part of the work and no part of the existing construction is subjected to damaging operations or influences which are in excess of those to be expected during normal occupancy conditions.

P. Conduct construction operations so that waste of power, water, and fuel is avoided.

Q. Provide temporary supports as required to prevent movement and structural failure.

R. Install products only during environmental conditions which will ensure the best possible results

1.06 SEQUENCING AND SCHEDULING

A. Install products only at the time and in the sequence which will ensure the best possible results.

B. Coordinate required administrative activities with related construction activities.

PART 2 – PRODUCTS (NOT USED)

PART 3 – EXECUTION

3.01 GENERAL EXAMINATION REQUIREMENTS

A. Existing Conditions: The existence and location of site improvements, utilities, and other construction indicated as existing are not guaranteed. Before beginning work, investigate and verify the existence and location of mechanical and electrical systems and other construction affecting the Work.

1. Before construction, verify the location and points of connection of utility services.

B. Existing Utilities: The existence and location of underground and other utilities and construction indicated as existing are not guaranteed. Before beginning sitework, investigate and verify the existence and location of underground utilities and other construction affecting the Work.

1. Before construction, verify the location and invert elevation at points of connection of sanitary sewer, storm sewer, and water-service piping; and underground electrical services.

2. Furnish location data for work related to Project that must be performed by public utilities serving Project site.

C. Acceptance of Conditions: Examine substrates, areas, and conditions, with Installer or Applicator present where indicated, for compliance with requirements for installation tolerances and other conditions affecting performance. Record observations.

1. Written Report: Where a written report listing conditions detrimental to performance of the Work is required by other Sections, include the following:
   a. Description of the Work.
   b. List of detrimental conditions, including substrates.
   c. List of unacceptable installation tolerances.
   d. Recommended corrections.
2. Verify compatibility with and suitability of substrates, including compatibility with existing finishes or primers.
3. Examine roughing-in for mechanical and electrical systems to verify actual locations of connections before equipment and fixture installation.
4. Examine walls, floors, and roofs for suitable conditions where products and systems are to be installed.
5. Proceed with installation only after unsatisfactory conditions have been corrected. Proceeding with the Work indicates acceptance of surfaces and conditions.
6. Conditions which could have been discovered by examination will not be allowed as cause for claims for extra work.

3.02 PREPARATION

A. Existing Utility Information: Furnish information to the local utility and the Owner that is necessary to adjust, move, or relocate existing utility structures, utility poles, lines, services, or other utility appurtenances located in or affected by construction. Coordinate with authorities having jurisdiction.

B. Field Measurements: Take field measurements as required to fit the Work properly. Recheck measurements before installing each product. Where portions of the Work are indicated to fit to other construction, verify dimensions of other construction by field measurements before fabrication. Coordinate fabrication schedule with construction progress to avoid delaying the Work.

C. Space Requirements: Verify space requirements and dimensions of items shown diagrammatically on Drawings.

D. Review of Contract Documents and Field Conditions: Immediately on discovery of the need for clarification of the Contract Documents, submit a request for information to Architect. Include a detailed description of problem encountered, together with recommendations for changing the Contract Documents.

3.03 CONSTRUCTION LAYOUT

A. Verification: Before proceeding to lay out the Work, verify layout information shown on Drawings, in relation to the property survey and existing benchmarks. If discrepancies are discovered, notify Architect promptly.

B. General:

1. Establish benchmarks and control points to set lines and levels at each story of construction and elsewhere as needed to locate each element of Project.
2. Establish dimensions within tolerances indicated. Do not scale Drawings to obtain required dimensions.
3. Inform installers of lines and levels to which they must comply.
4. Check the location, level and plumb, of every major element as the Work progresses.
5. Notify Architect when deviations from required lines and levels exceed allowable tolerances.
6. Close site surveys with an error of closure equal to or less than the standard established by authorities having jurisdiction.

C. Site Improvements: Locate and lay out site improvements, including pavements, grading, fill and topsoil placement, utility slopes, and invert elevations.

D. Verify that utility requirements of operating equipment are compatible with building utilities.

3.04 GENERAL INSTALLATION PROCEDURES

A. General: Locate the Work and components of the Work accurately, in correct alignment and elevation, as indicated.
1. Make vertical work plumb and make horizontal work level.
2. Where space is limited, install components to maximize space available for maintenance and
3. ease of removal for replacement.
4. Conceal pipes, ducts, and wiring in finished areas, unless otherwise indicated.
5. Maintain minimum headroom clearance of 8 feet in spaces without a suspended ceiling.

B. Comply with manufacturer's written instructions and recommendations for installing products in applications indicated.

C. Install products at the time and under conditions that will ensure the best possible results. Maintain conditions required for product performance until Substantial Completion.

D. Conduct construction operations so no part of the Work is subjected to damaging operations or loading in excess of that expected during normal conditions of occupancy.

E. Tools and Equipment: Do not use tools or equipment that produce harmful noise levels.

F. Anchors and Fasteners: Provide anchors and fasteners as required to anchor each component securely in place, accurately located and aligned with other portions of the Work.

1. Mounting Heights: Where mounting heights are not indicated, mount components at heights directed by Architect.
2. Allow for building movement, including thermal expansion and contraction.

G. Joints: Make joints of uniform width. Where joint locations in exposed work are not indicated, arrange joints for the best visual effect. Fit exposed connections together to form hairline joints.

H. Hazardous Materials: Use products, cleaners, and installation materials that are not considered hazardous.

I. Coordinate exact locations of fixtures and outlets with finish elements.

J. Install work in such manner and sequence as to preclude, if possible, or at least to minimize, cutting and patching.

K. Miscellaneous

1. Do not cut any structural elements
2. Existing Construction:
   a. Perform work in existing construction in same manner as for new construction unless otherwise specified.
   b. Where a new surface exposed to view is an extension of any existing surface, align both surfaces without a change of plane and make a neat transition between finishes.
   c. If a change of plane is necessary due to the configuration of the existing surface, obtain instructions from the architect.
   d. Where portions of existing work are removed, patch remaining work with neat transitions between remaining surfaces without evidence of cutting.
   e. Where neat transitions between remaining surfaces are not possible due to configuration of existing surfaces, obtain instructions from the architect.
   f. Where existing construction is removed, remove existing utility services located within or upon the existing construction.
   g. Cap cut ends of abandoned piping, conduit, and duct in such a manner that they are concealed in finish work.

3.05 CLEANING AND PROTECTION

A. General: Clean Project site and work areas daily, including common areas. Coordinate progress cleaning for joint-use areas where more than one installer has worked. Enforce requirements strictly. Dispose of materials lawfully.

1. Comply with requirements in NFPA 241 for removal of combustible waste materials and debris.
2. Do not hold materials more than 7 days during normal weather or 3 days if the temperature is expected to rise above 80 deg F (27 deg C).
3. Containerize hazardous and unsanitary waste materials separately from other waste. Mark containers appropriately and dispose of legally, according to regulations.

B. Site: Maintain Project site free of waste materials and debris.

C. Work Areas: Clean areas where work is in progress to the level of cleanliness necessary for proper execution of the Work.

1. Remove liquid spills promptly.
2. Where dust would impair proper execution of the Work, broom-clean or vacuum the entire work area, as appropriate

D. Installed Work: Keep installed work clean. Clean installed surfaces according to written instructions of manufacturer or fabricator of product installed, using only cleaning materials specifically recommended. If specific cleaning materials are not recommended, use cleaning materials that are not hazardous to health or property and that will not damage exposed surfaces.

E. Concealed Spaces: Remove debris from concealed spaces before enclosing the space.

F. Exposed Surfaces: Clean exposed surfaces and protect as necessary to ensure freedom from damage and deterioration at time of Substantial Completion.

G. Cutting and Patching: Clean areas and spaces where cutting and patching are performed. Completely remove paint, mortar, oils, putty, and similar materials.

1. Thoroughly clean piping, conduit, and similar features before applying paint or other finishing materials. Restore damaged pipe covering to its original condition.

H. Waste Disposal: Burying or burning waste materials on-site will not be permitted. Washing waste materials down sewers or into waterways will not be permitted.

I. During handling and installation, clean and protect construction in progress and adjoining materials already in place. Apply protective covering where required to ensure protection from damage or deterioration at Substantial Completion.

J. Clean and provide maintenance on completed construction as frequently as necessary through the remainder of the construction period. Adjust and lubricate operable components to ensure operability without damaging effects.

K. Limiting Exposures: Supervise construction operations to assure that no part of the construction, completed or in progress, is subject to harmful, dangerous, damaging, or otherwise deleterious exposure during the construction period.

L. Protect installed work from soiling and damage.

M. Protection means and methods

1. Provide protective coverings as required.
2. Provide protective coverings for work which may be damaged by subsequent operations.
3. Where heavy abuse is expected, use minimum of plywood for protection.
4. Maintain protective coverings until substantial completion.
5. Comply with manufacturers written instructions for temperature and relative humidity.

3.06 INSULATION OF COMPONENTS

A. Install all products in accordance with manufacturer's instructions and recommendations, whether conveyed in writing or not.

B. Mounting Heights: Where mounting heights are not indicated, mount at heights directed by the architect.

C. Separate incompatible materials with suitable materials or spacing.

1. Prevent cathodic corrosion.

D. Provide all anchors and fasteners required and use methods necessary to securely fasten work.

1. Allow for thermal expansion and contraction, and for building movement.

E. After installation, adjust operating components to proper operation.

3.07 PROCEDURES FOR CORRECTION OF WORK

A. The following must be replaced (repair is not acceptable):

1. Damaged surfaces exposed to view which cannot be repaired without visible evidence of repair.
2. Components which cannot be repaired to proper operating condition.
3. Chipped and broken glass.
4. Scratched transparent materials.
5. Scratched reflective surfaces.

B. Repair or Replace:

1. Components which do not operate properly.
2. Surfaces exposed to view which cannot be cleaned to original condition.
3. Permanent facilities used during construction.
4. Other defective work.

C. Acceptable Repair Methods:

1. Replacing parts.
2. Refinishing.
3. Touching up with matching materials.
4. Proper adjustment of equipment.

D. When it is necessary to deviate from the contract documents in order to accomplish corrective action, submit a supplemental instruction request.

E. Restore permanent facilities used during construction to specified condition.

F. Restore existing facilities used during construction, and existing facilities affected by construction operations, to original condition.

3.08 FACILITY STARTUP

A. Put each item of equipment and each system into full, satisfactory operation.

B. Prior to Startup:

1. Verify that equipment and systems are complete, correctly connected to utilities, and tested (certification)
   a. Comply with requirements of manufacturer.
2. Inspect and test as required to ensure that work is installed as specified and to determine suitability for energizing.
3. Provide power and fuel for startup and testing.
4. Change over from temporary to permanent utility sources.
5. Re-adjust and lubricate operating components as required to ensure smooth and unhindered operation.
   a. Check drive rotations, belt tension, control sequences, and other features which might cause damage if not properly adjusted.
6. When specified or when required by manufacturer, have manufacturer's representative prepare for startup or supervise such preparation.

C. Notify the architect at least 5 days prior to startup of each item and system.

D. Execute startup under supervision of responsible personnel in accordance with the manufacturer's instructions.

1. When specified or when required by manufacturer, have manufacturer's representative perform startup.

E. After startup, adjust equipment and systems as required for proper operation.

1. Where specified, perform tests or inspections to determine status of operation.

F. Demonstrate the operation and maintenance of equipment and systems to personnel designated by the owner, prior to final payment.

1. Have final operating and maintenance data available during demonstration.

G. For equipment and systems which have different operation at different seasons, demonstrate operation during subsequent seasons until fully demonstrated.

3.09 INSTRUCTIONS OF THE OWNER'S PERSONNEL

A. Instruct personnel designated by the OWNER in the operation and maintenance of equipment and systems, prior to final payment.

1. Explain all modes of operation and types of maintenance required.
2. Demonstrate all functions, including startup, operation, control, adjustment, troubleshooting, servicing, maintenance, and shutdown.
3. Review terms of warranties and procedures for obtaining warranty service.
4. Review maintenance agreements and other similar commitments which extend past final completion.
5. Have operating and maintenance data available for use during instruction.
   a. Review contents in detail.
   b. Prepare and insert additional data when need for such becomes apparent during instruction.

B. Arrange times and places of instruction with the University.

1. Provide a minimum of 1 hour of instruction for each item of equipment and each system, unless otherwise specified.

C. Provide instruction by qualified personnel of the contractor, unless otherwise specified.

D. For equipment and systems which have different operation at different seasons, provide instruction during subsequent seasons until all modes of operation have been covered.

3.10 FINAL CLEANING

A. Remove materials and equipment which are not part of the work and all debris from the site prior to substantial completion.

1. Remove all surplus materials which are to remain property of the contractor; obtain the owner's instructions as to disposition of surplus material remaining on site and deliver, store, or dispose of as directed.
2. Remove protective coverings.
3. Remove temporary facilities.

B. Dispose of debris in a lawful manner.

1. Do not burn or bury debris on the site.
2. Do not dispose of volatile wastes in storm or sanitary drains.

C. Perform final cleaning prior to requesting inspection for substantial completion.

1. Use only professional cleaners.
2. Clean to the level of cleanliness that would be expected by a commercial building owner from a janitorial service.

D. Clean entire project site and grounds.

1. Clean up landscaped areas.
2. Broom clean paved areas.
3. Rake smooth all exposed earth surfaces.
4. Remove snow and ice from building and site accesses.

E. In spaces to be occupied, remove dirt, stains, and other foreign substances from all accessible surfaces and remove nonpermanent labels.

F. Remove debris from roofs, gutters, downspouts, and roof drains.

G. In spaces not normally occupied, remove debris and surface dust and wipe equipment clean, removing excess lubrication, paint, and other foreign substances.

H. Remove paint and other coatings from permanent labels and from mechanical and electrical equipment nameplates.

I. Leave the project clean and ready for occupancy.

3.11 PROJECT COMPLETION PROCEDURES

A. Complete the work, prior to substantial completion, as required to obtain consent to occupancy from the governing authorities.

B. Arrange for final inspections by governing authorities to be accomplished prior to substantial completion.

1. Obtain certificate of occupancy.

C. Prepare as built drawings.

D. If temporary locking systems differ from permanent locking systems, changeover to permanent systems prior to substantial completion.

E. Final Extermination: Engage a licensed exterminator to make final inspection and rid the project of rodents, insects, and other pests.

END OF SECTION 017000

SECTION 017400 - WARRANTIES AND BONDS

PART 1 - GENERAL

1.1 SUMMARY

A. This Section specifies general administrative and procedural requirements for warranties and bonds required by the Contract Documents, including manufacturer's standard warranties on products and special warranties.

1) Refer to the General Conditions for terms of the Contractor's special warranty of workmanship and materials.

2) General closeout requirements are included in Section "Project Closeout."

3) Specific requirements for warranties for the Work and products and installations that are specified to be warranted, are included in the individual Sections of Divisions-3 through 33.

4) Certifications and other commitments and agreements for continuing services to Owner are specified elsewhere in the Contract Documents.

B. Disclaimers and Limitations: Manufacturer's disclaimers and limitations on product warranties do not relieve the Contractor of the warranty on the Work that incorporates the products, nor does it relieve suppliers, manufacturers, and subcontractors required to countersign special warranties with the Contractor.

1.2 WARRANTY REQUIREMENTS

A. Contractor's warranty period(s) stated herein shall apply to all goods and services and all work performed by Contractor hereunder. The warranty period(s) stated herein shall commence upon substantial completion of the facility as accepted by the Owner, and shall remain in effect for 24 months.

B. During warranty period(s) stated herein, Contractor guarantees that qualified personnel will be available to provide on-site service within one week or less from the time Owner verbally notifies seller.

C. Contractor warrants that the goods shall be free from defects in design, materials, workmanship, and title, shall be of best quality if no quality is specified and shall conform in all respects to the terms of the Contract (including, without limitation, the terms of any performance guarantees which may be set forth in the material requisition or specification). If it appears at any time during the warranty period, that the goods, or any part thereof, do not conform to these warranties, and Owner so notifies Contractor within a reasonable time after its discovery, Contractor shall thereupon promptly take such action necessary to correct such nonconformity at its sole expense, and, if Contractor fails, refuses, or is unable promptly to correct such nonconformity, Owner may take all necessary corrective action and Contractor shall reimburse Owner for the entire expense of such corrective action. Unless expressly provided to the contrary in the Contract, Contractor's warranty liability shall also extend to all damages caused by the breach of any of the foregoing warranties or guarantees, but such liability shall in no event include consequential damages such as loss of profit or loss of use.

D. Contractor warrants and guarantees that all goods and/or services covered by the Contract will conform to the terms, plans, drawings, samples or other specifications or descriptions furnished or adopted by Owner and to highest professional standards, will be fit and sufficient for the purpose intended, merchantable, of good material, workmanship and quality, and free from defect. Contractor will be liable for costs, losses or damages incurred as a result of any breach of the warranties set forth herein. This warranty is in addition to and shall not exclude any other warranties arising under the terms of the Contract, applicable law or otherwise. Contractor will indemnify and hold Owner harmless for any losses or damages resulting from injury to person or

property as a result of any defect or alleged defect in any item furnished hereunder. Such warranties, including warranties prescribed by law shall run to Owner, its successors, assigns and customers and to users of the goods purchased hereunder as specified above.

E. Related Damages and Losses: When correcting warranted Work that has failed, remove and replace other Work that has been damaged as a result of such failure or that must be removed and replaced to provide access for correction of warranted Work.

F. Reinstatement of Warranty: When Work covered by a warranty has failed and been corrected by replacement or rebuilding, reinstate the warranty by written endorsement. The reinstated warranty shall be equal to the original warranty with an equitable adjustment for depreciation.

G. Replacement Cost: Upon determination that Work covered by a warranty has failed, replace or rebuild the Work to an acceptable condition complying with requirements of Contract Documents. The Contractor is responsible for the cost of replacing or rebuilding defective Work regardless of whether the Owner has benefited from use of the Work through a portion of its anticipated useful service life.

H. Owner's Recourse: Written warranties made to the Owner are in addition to implied warranties, and shall not limit the duties, obligations, rights and remedies otherwise available under the law, nor shall warranty periods be interpreted as limitations on time in which the Owner can enforce such other duties, obligations, rights, or remedies.

1) Rejection of Warranties: The Owner reserves the right to reject warranties and to limit selections to products with warranties not in conflict with requirements of the Contract Documents.

I. The Owner reserves the right to refuse to accept Work for the Project where a special warranty, certification, or similar commitment is required on such Work or part of the Work, until evidence is presented that entities required to countersign such commitments are willing to do so.

1.3 SUBMITTALS

A. Submit written warranties to the Owner’s Representative prior to the date certified for Substantial Completion. If the Owner’s Representative’s Certificate of Substantial Completion designates a commencement date for warranties other than the date of Substantial Completion for the Work, or a designated portion of the Work, submit written warranties upon request of the Owner’s Representative.

1) When a designated portion of the Work is completed and occupied or used by the Owner, by separate agreement with the Contractor during the construction period, submit properly executed warranties to the Owner’s Representative within 15 days of completion of that designated portion of the Work.

B. When a special warranty is required to be executed by the Contractor, or the Contractor and a subcontractor, supplier or manufacturer, prepare a written document that contains appropriate terms and identification, ready for execution by the required parties. Submit a draft to the Owner through the Owner’s Representative for approval prior to final execution.

C. Forms for special warranties are included at the end of this Section. Prepare a written document utilizing the appropriate form, ready for execution by the Contractor, or the Contractor and subcontractor, supplier or manufacturer. Submit a draft to the Owner through Owner’s Representative for approval prior to final execution.

1) Refer to individual Sections of Divisions-3 through -33 for specific content requirements, and particular requirements for submittal of special warranties.

D. Form of Submittal: At Final Completion compile two copies of each required warranty and bond properly executed by the Contractor, or by the Contractor, subcontractor, supplier, or manufacturer

Organize the warranty documents into an orderly sequence based on the table of contents of the Project Manual.

E. Submit all warranties and bond via electronic copies only.

PART 2 - PRODUCTS (NOT APPLICABLE)

PART 3 - EXECUTION

END OF SECTION 017400

SECTION 017419 - CONSTRUCTION WASTE MANAGEMENT AND DISPOSAL

PART 1 - GENERAL

1.1 RELATED DOCUMENTS

A. Drawings and general provisions of the Contract, including General and Supplementary Conditions and other Division 01 Specification Sections, apply to this Section.

1.2 SUMMARY

A. Section includes administrative and procedural requirements for the following:

1. Salvaging nonhazardous construction waste.
2. Recycling nonhazardous construction waste.
3. Disposing of nonhazardous construction waste.

B. Related Requirements:

1. Section 042000 "Unit Masonry" for disposal requirements for masonry waste.
2. Section 311000 "Site Clearing" for disposition of waste resulting from site clearing and removal of above- and below-grade improvements.

1.3 DEFINITIONS

A. Construction Waste: Building, structure, and site improvement materials and other solid waste resulting from construction, remodeling, renovation, or repair operations. Construction waste includes packaging.

B. Demolition Waste: Building, structure, and site improvement materials resulting from demolition operations.

C. Disposal: Removal of demolition or construction waste and subsequent salvage, sale, recycling, or deposit in landfill, incinerator acceptable to authorities having jurisdiction, or designated spoil areas on Owner’s property.

D. Recycle: Recovery of demolition or construction waste for subsequent processing in preparation for reuse.

E. Salvage: Recovery of demolition or construction waste and subsequent sale or reuse in another facility.

F. Salvage and Reuse: Recovery of demolition or construction waste and subsequent incorporation into the Work.

1.4 MATERIALS OWNERSHIP

A. Unless otherwise indicated, demolition and construction waste becomes property of Contractor.

B. Historic items, relics, antiques, and similar objects including, but not limited to, cornerstones and their contents, commemorative plaques and tablets, and other items of interest or value to Owner that may be uncovered during demolition remain the property of Owner.

1. Carefully salvage in a manner to prevent damage and promptly return to Owner.

1.5 ACTION SUBMITTALS

A. Waste Management Plan: Submit plan within 7 days of date established for commencement of the Work.

1.6 INFORMATIONAL SUBMITTALS

A. Waste Reduction Progress Reports: Concurrent with each Application for Payment, submit report. Use [Form CWM-7 for construction waste] [and] [Form CWM-8 for demolition waste] <Insert Owner's form designation>. Include the following information:

1. Material category.
2. Generation point of waste.
3. Total quantity of waste in tons.
4. Quantity of waste salvaged, both estimated and actual in tons.
5. Quantity of waste recycled, both estimated and actual in tons.
6. Total quantity of waste recovered (salvaged plus recycled) in tons.
7. Total quantity of waste recovered (salvaged plus recycled) as a percentage of total waste.

B. Waste Reduction Calculations: Before request for Substantial Completion, submit calculated end-of-Project rates for salvage, recycling, and disposal as a percentage of total waste generated by the Work.

C. Records of Donations: Indicate receipt and acceptance of salvageable waste donated to individuals and organizations. Indicate whether organization is tax exempt.

D. Records of Sales: Indicate receipt and acceptance of salvageable waste sold to individuals and organizations. Indicate whether organization is tax exempt.

E. Recycling and Processing Facility Records: Indicate receipt and acceptance of recyclable waste by recycling and processing facilities licensed to accept them. Include manifests, weight tickets, receipts, and invoices.

F. Landfill and Incinerator Disposal Records: Indicate receipt and acceptance of waste by landfills and incinerator facilities licensed to accept them. Include manifests, weight tickets, receipts, and invoices.

G. LEED Submittal: Submit documentation to USGBC, signed by Contractor, tabulating total waste material, quantities diverted and means by which it is diverted, and statement that requirements for the credit have been met. Respond to questions and requests from USGBC regarding construction waste management and disposal until the USGBC has made its determination on the project's LEED certification application. Document correspondence with USGBC as informational submittals.

H. Qualification Data: For waste management coordinator and refrigerant recovery technician.

I. Statement of Refrigerant Recovery: Signed by refrigerant recovery technician responsible for recovering refrigerant, stating that all refrigerant that was present was recovered and that recovery was performed according to EPA regulations. Include name and address of technician and date refrigerant was recovered.

J. Refrigerant Recovery: Comply with requirements in [Section 024116 "Structure Demolition"] [Section 024119 "Selective Demolition"] for refrigerant recovery submittals.

1.7 QUALITY ASSURANCE

A. Regulatory Requirements: Comply with transportation and disposal regulations of authorities having jurisdiction.

B. Waste Management Conference(s): Conduct conference(s) at Project site to comply with requirements in Section 013100 "Project Management and Coordination." Review methods and procedures related to waste management including, but not limited to, the following:

1. Review and discuss waste management plan including responsibilities of each contractor and waste management coordinator.
2. Review requirements for documenting quantities of each type of waste and its disposition.
3. Review and finalize procedures for materials separation and verify availability of containers and bins needed to avoid delays.
4. Review procedures for periodic waste collection and transportation to recycling and disposal facilities.
5. Review waste management requirements for each trade.

1.8 WASTE MANAGEMENT PLAN

A. General: Develop a waste management plan according to requirements in this Section. Plan shall consist of waste identification, waste reduction work plan, and cost/revenue analysis.[Distinguish between demolition and construction waste.] Indicate quantities by weight or volume, but use same units of measure throughout waste management plan.

B. Waste Identification: Indicate anticipated types and quantities of [demolition] [site-clearing] [and] [construction] waste generated by the Work. Use [Form CWM-1 for construction waste] [and] [Form CWM-2 for demolition waste] <Insert Owner's form designation>. Include estimated quantities and assumptions for estimates.

C. Waste Reduction Work Plan: List each type of waste and whether it will be salvaged, recycled, or disposed of in landfill or incinerator. Use Form CWM-3 for construction waste. Include points of waste generation, total quantity of each type of waste, quantity for each means of recovery, and handling and transportation procedures.

1. Salvaged Materials for Sale: For materials that will be sold to individuals and organizations, include list of their names, addresses, and telephone numbers.
2. Salvaged Materials for Donation: For materials that will be donated to individuals and organizations, include list of their names, addresses, and telephone numbers.

3. Recycled Materials: Include list of local receivers and processors and type of recycled materials each will accept. Include names, addresses, and telephone numbers.
4. Disposed Materials: Indicate how and where materials will be disposed of. Include name, address, and telephone number of each landfill and incinerator facility.
5. Handling and Transportation Procedures: Include method that will be used for separating recyclable waste including sizes of containers, container labeling, and designated location where materials separation will be performed.

D. Cost/Revenue Analysis: Indicate total cost of waste disposal as if there were no waste management plan and net additional cost or net savings resulting from implementing waste management plan. Use Form CWM-5 for construction waste. Include the following:

1. Total quantity of waste.
2. Estimated cost of disposal (cost per unit). Include transportation and tipping fees and cost of collection containers and handling for each type of waste.
3. Total cost of disposal (with no waste management).
4. Revenue from salvaged materials.
5. Revenue from recycled materials.
6. Savings in transportation and tipping fees by donating materials.
7. Savings in transportation and tipping fees that are avoided.
8. Handling and transportation costs. Include cost of collection containers for each type of waste.
9. Net additional cost or net savings from waste management plan.

PART 2 - PRODUCTS

2.1 PERFORMANCE REQUIREMENTS

A. General: Achieve end-of-Project rates for salvage/recycling of [50] [75] <Insert number> percent by weight of total nonhazardous solid waste generated by the Work. Practice efficient waste management in the use of materials in the course of the Work. Use all reasonable means to divert construction and demolition waste from landfills and incinerators. Facilitate recycling and salvage of materials[.][, including the following:]

1. Demolition Waste:

a. Asphalt paving.
b. Concrete.
c. Concrete reinforcing steel.
d. Brick.
e. Concrete masonry units.
f. Wood studs.
g. Wood joists.
h. Plywood and oriented strand board.
i. Wood paneling.
j. Wood trim.
k. Structural and miscellaneous steel.
l. Rough hardware.
m. Roofing.
n. Insulation.
o. Doors and frames.

p. Door hardware.
q. Windows.
r. Glazing.
s. Metal studs.
t. Gypsum board.
u. Acoustical tile and panels.
v. Carpet.
w. Carpet pad.
x. Demountable partitions.
y. Equipment.
z. Cabinets.
aa. Plumbing fixtures.
bb. Piping.
cc. Supports and hangers.
dd. Valves.
ee. Sprinklers.
ff. Mechanical equipment.
gg. Refrigerants.
hh. Electrical conduit.
ii. Copper wiring.
jj. Lighting fixtures.
kk. Lamps.
ll. Ballasts.
mm. Electrical devices.
nn. Switchgear and panelboards.
oo. Transformers.
pp. <Insert materials required>.

2. Construction Waste:

a. Masonry and CMU.
b. Lumber.
c. Wood sheet materials.
d. Wood trim.
e. Metals.
f. Roofing.
g. Insulation.
h. Carpet and pad.
i. Gypsum board.
j. Piping.
k. Electrical conduit.
l. Packaging: Regardless of salvage/recycle goal indicated in "General" Paragraph above, salvage or recycle 100 percent of the following uncontaminated packaging materials:

1) Paper.
2) Cardboard.
3) Boxes.
4) Plastic sheet and film.
5) Polystyrene packaging.
6) Wood crates.
7) Wood pallets.

8) Plastic pails.

m. Construction Office Waste: Regardless of salvage/recycle goal indicated in "General" Paragraph above, salvage or recycle 100 percent of the following construction office waste materials:

1) Paper.
2) Aluminum cans.
3) Glass containers.

PART 3 - EXECUTION

3.1 PLAN IMPLEMENTATION

A. General: Implement approved waste management plan. Provide handling, containers, storage, signage, transportation, and other items as required to implement waste management plan during the entire duration of the Contract.

1. Comply with operation, termination, and removal requirements in Section 015000 "Temporary Facilities and Controls."

B. Waste Management Coordinator: Engage a waste management coordinator to be responsible for implementing, monitoring, and reporting status of waste management work plan.[Coordinator shall be present at Project site full time for duration of Project.]

C. Training: Train workers, subcontractors, and suppliers on proper waste management procedures, as appropriate for the Work.

1. Distribute waste management plan to everyone concerned within [three] <Insert number> days of submittal return.
2. Distribute waste management plan to entities when they first begin work on-site. Review plan procedures and locations established for salvage, recycling, and disposal.

D. Site Access and Temporary Controls: Conduct waste management operations to ensure minimum interference with roads, streets, walks, walkways, and other adjacent occupied and used facilities.

1. Designate and label specific areas on Project site necessary for separating materials that are to be salvaged and recycled.
2. Comply with Section 015000 "Temporary Facilities and Controls" for controlling dust and dirt, environmental protection, and noise control.

E. Waste Management in Historic Zones or Areas: Transportation equipment and other materials shall be of sizes that clear surfaces within historic spaces, areas, rooms, and openings, by [12 inches] <Insert dimension> or more.

3.2 RECYCLING CONSTRUCTION WASTE, GENERAL

A. General: Recycle paper and beverage containers used by on-site workers.

B. Recycling Incentives: Revenues, savings, rebates, tax credits, and other incentives received for recycling waste materials shall [accrue to Owner] [accrue to Contractor] [be shared equally by Owner and Contractor].

C. Preparation of Waste: Prepare and maintain recyclable waste materials according to recycling or reuse facility requirements. Maintain materials free of dirt, adhesives, solvents, petroleum contamination, and other substances deleterious to the recycling process.

D. Procedures: Separate recyclable waste from other waste materials, trash, and debris. Separate recyclable waste by type at Project site to the maximum extent practical according to approved construction waste management plan.

1. Provide appropriately marked containers or bins for controlling recyclable waste until removed from Project site. Include list of acceptable and unacceptable materials at each container and bin.

a. Inspect containers and bins for contamination and remove contaminated materials if found.

2. Stockpile processed materials on-site without intermixing with other materials. Place, grade, and shape stockpiles to drain surface water. Cover to prevent windblown dust.
3. Stockpile materials away from construction area. Do not store within drip line of remaining trees.
4. Store components off the ground and protect from the weather.
5. Remove recyclable waste from Owner's property and transport to recycling receiver or processor as often as required to prevent overfilling bins.

3.3 RECYCLING CONSTRUCTION WASTE

A. Packaging:

1. Cardboard and Boxes: Break down packaging into flat sheets. Bundle and store in a dry location.
2. Polystyrene Packaging: Separate and bag materials.
3. Pallets: As much as possible, require deliveries using pallets to remove pallets from Project site. For pallets that remain on-site, break down pallets into component wood pieces and comply with requirements for recycling wood.
4. Crates: Break down crates into component wood pieces and comply with requirements for recycling wood.

B. Wood Materials:

1. Clean Cut-Offs of Lumber: Grind or chip into small pieces.
2. Clean Sawdust: Bag sawdust that does not contain painted or treated wood.

a. Comply with requirements in Section 329300 "Plants" for use of clean sawdust as organic mulch.

C. Gypsum Board: Stack large clean pieces on wood pallets or in container and store in a dry location.

1. Clean Gypsum Board: Grind scraps of clean gypsum board using small mobile chipper or hammer mill. Screen out paper after grinding.

a. Comply with requirements in Section 329300 "Plants" for use of clean ground gypsum board as inorganic soil amendment.

D. Paint: Seal containers and store by type.

3.4 DISPOSAL OF WASTE

A. General: Except for items or materials to be salvaged or recycled, remove waste materials from Project site and legally dispose of them in a landfill or incinerator acceptable to authorities having jurisdiction.

1. Except as otherwise specified, do not allow waste materials that are to be disposed of accumulate on-site.
2. Remove and transport debris in a manner that will prevent spillage on adjacent surfaces and areas.

B. General: Except for items or materials to be salvaged or recycled, remove waste materials and legally dispose of at designated spoil areas on Owner’s property.

C. Burning: Do not burn waste materials.

D. Burning: Burning of waste materials is permitted only at designated areas on Owner's property, provided required permits are obtained. Provide full-time monitoring for burning materials until fires are extinguished.

3.5 ATTACHMENTS

A. Form CWM-1 for construction waste identification.

B. Form CWM-3 for construction waste reduction work plan.

C. Form CWM-5 for cost/revenue analysis of construction waste reduction work plan.

D. Form CWM-7 for construction waste reduction progress report.

END OF SECTION 017419

SECTION 017700 - PROJECT CLOSE OUT

PART 1 - GENERAL

1.1 SUMMARY

A. This Section specifies administrative and procedural requirements for project closeout, including but not limited to:

1) Inspection procedures.

2) Project record document submittal.

3) Operating and maintenance manual submittal.

4) Submittal of warranties.

5) Final cleaning.

B. Closeout requirements for specific construction activities are included in the appropriate Sections in Divisions-3 through -33.

1.2 SUBSTANTIAL COMPLETION

A. Preliminary Procedures: Before requesting inspection for certification of Substantial Completion, complete the following. List exceptions in the request.

B. In the Application for Payment that coincides with, or first follows, the date Substantial Completion is claimed, show 100 percent completion for the portion of the Work claimed as substantially complete. Include supporting documentation for completion as indicated in these Contract Documents and a statement showing an accounting of changes to the Contract Sum. If 100 percent completion cannot be shown, include a list of incomplete items, the value of incomplete construction, and reasons the Work is not complete.

1) Advise Owner of pending insurance change-over requirements.

2) Submit specific warranties, workmanship bonds, maintenance agreements, final certifications and similar documents.

3) Obtain and submit releases enabling the Owner unrestricted use of the Work and access to services and utilities; include occupancy permits, operating certificates and similar releases.

4) Submit record drawings, maintenance manuals, damage or settlement survey, property survey, and similar final record information.

5) Deliver tools, spare parts, extra stock, and similar items.

6) Make final change-over of permanent locks and transmit keys to the Owner. Advise the Owner's personnel of change-over in security provisions.

7) Complete start-up testing of systems, and instruction of the Owner's operating and maintenance personnel. Discontinue or change over and remove temporary facilities from the site, along with construction tools, mock-ups, and similar elements.

8) Complete final clean up requirements, including touch-up painting. Touch-up and otherwise repair and restore marred exposed finishes.

C. Inspection Procedures: On receipt of a request for inspection, the Owner’s representative will either proceed with inspection or advise the Contractor of unfilled requirements. The Owner’s Representative will prepare the Certificate of Substantial Completion following inspection, or advise the Contractor of construction that must be completed or corrected before the certificate will be issued.

1) The Owner's Representative will repeat inspection when requested and assured that the Work has been substantially completed.

2) Results of the completed inspection will form the basis of requirements for final acceptance.

1.3 FINAL ACCEPTANCE

A. Preliminary Procedures: Before requesting final inspection for certification of final acceptance and final payment, complete the following:

1) Submit the final payment request with releases and supporting documentation not previously submitted and accepted.

2) Include certificates of insurance for products and completed operations where required.

3) Submit an updated final statement, accounting for final additional changes to the Contract Sum.

4) Submit a certified copy of the Owner's Representative's final inspection list of items to be completed or corrected, stating that each item has been completed or otherwise resolved for acceptance, and the list has been endorsed and dated by the Owner's Representative.

5) Submit final meter readings for utilities, a measured record of stored fuel, and similar data as of the date of Substantial Completion, or when the Owner took possession of and responsibility for corresponding elements of the Work.

6) Submit consent of surety to final payment.

7) Submit a final liquidated damages settlement statement.

8) Submit evidence of final, continuing insurance coverage complying with insurance requirements.

9) List any exceptions to the above in the request.

B. Reinspection Procedure: The Owner's Representative will reinspect the Work upon receipt of notice that the Work, including inspection list items from earlier inspections, has been completed, except items whose completion has been delayed because of circumstances acceptable to the Owner's Representative.

1) Upon completion of reinspection, the Owner's Representative will prepare a certificate of final acceptance, or advise the Contractor of Work that is incomplete or of obligations that have not been fulfilled but are required for final acceptance.

2) If necessary, reinspection will be repeated.

1.4 RECORD DOCUMENT SUBMITTALS

A. General: Do not use record documents for construction purposes; protect from deterioration and loss in a secure, fire-resistive location; provide access to record documents for Owner's Representative's reference during normal working hours.

B. Project Record Documents: Refer requirements set in Section 01330 "Submittal Procedures".

C. Maintenance Manuals: Refer requirements set in Section Section 01330 "Submittal Procedures".

PART 2 - PRODUCTS (NOT APPLICABLE)

PART 3 - EXECUTION

3.1 CLOSEOUT PROCEDURES

A. Operating and Maintenance Instructions: Arrange for each installer of equipment that requires regular maintenance to meet with the Owner's personnel to provide instruction in proper operation

and maintenance. If installers are not experienced in procedures, provide instruction by manufacturer's representatives. Include a detailed review of the following items:

1) Maintenance manuals.
2) Record documents.
3) Spare parts and materials.
4) Tools.
5) Lubricants.
6) Fuels.
7) Identification systems.
8) Control sequences.
9) Cleaning.
10) Warranties and bonds.
11) Maintenance agreements and similar continuing commitments.

B. As part of instruction for operating equipment, demonstrate the following procedures:

1) Start-up.
2) Shutdown.
3) Emergency operations.
4) Noise and vibration adjustments.
5) Safety procedures.
6) Economy and efficiency adjustments.
7) Effective energy utilization.

END OF SECTION 017700

SECTION 017821 - PROJECT RECORD DOCUMENTS

PART 1- GENERAL

1.1 RELATED DOCUMENTS

A. Drawings and general provisions of the Contract, including General and Supplementary Conditions and other Division 1 Specification Sections, apply to this Section.

1.2 SUMMARY

A. This Section includes administrative and procedural requirements for Project Record Documents, including the following:

1. Record Drawings.

2. Record Specifications.

B. Related Sections include the following:

1. Division 1 Section "Project Management and Coordination" for general closeout procedures.

2. Division 1 Section "Operation and Maintenance Data" for operation and maintenance manual requirements.

3. Divisions 2 through 16 Sections for specific requirements for Project Record Documents of products in those Sections.

1.3 SUBMITTALS

A. Record Drawings: Submit one electronic version of marked-up Record Prints to the Owner prior to Final Completion in PDF format with mark-ups electronically inserted.

B. Record Specifications: Submit one electronic version of Project's Specifications, including addenda and contract modifications in PDF format with mark-ups electronically inserted.

PART 2 - PRODUCTS

2.1 RECORD DRAWINGS

A. Record Drawings: Maintain one electronic version in PDF format with mark-ups electronically inserted.

1. Preparation: Mark Record Prints to show the actual installation where installation varies from that shown originally. Require individual or entity who obtained record data, whether individual or entity is Installer, subcontractor, or similar entity, to prepare the marked-up Record Drawings.

a. Give particular attention to information on concealed elements that would be difficult to identify or measure and record later.

b. Accurately record information in an understandable drawing technique.

c. Record data as soon as possible after obtaining it. Record and check the markup before enclosing concealed installations.

2. Content: Types of items requiring marking include, but are not limited to, the following:

a. Added scope of repair work.

b. Revisions to details shown on Drawings.

c. Changes made by Change Order or Construction Change Directive.

d. Details not on the original Contract Drawings.

e. Field records for variable and concealed conditions.

3. Mark the Record Drawings or Shop Drawings, whichever is most capable of showing actual physical conditions, completely and accurately. If Shop Drawings are marked, show cross-reference on the Contract Drawings.

4. Mark Record Drawings with red font and markings. Supplement with other colors to distinguish between changes for different categories of the Work at the same location.

5. Mark important additional information that was either shown schematically or omitted from original Drawings.

6. Note Construction Change Directive numbers, alternate numbers, Change Order numbers, and similar identification, where applicable.

B. Newly Prepared Record Drawings: Prepare new Drawings instead of adding marks to existing Record Drawings where Owner determines that neither the original Contract Drawings nor Shop Drawings are suitable to show actual installation.

1. New Drawings may be required when a Change Order is issued as a result of accepting an alternate, substitution, or other modification.

C. Format: Identify and date each Record Drawing; include the designation "PROJECT RECORD DRAWING" in a prominent location.

1. Organize Record Drawings into manageable sets, adding bookmarks to identify separate construction disciplines and each separate sheet.

2. Identification: As follows:

a. Project name.

b. Date.

c. Designation "PROJECT RECORD DRAWINGS."

d. Name of Contractor.

2.2 RECORD SPECIFICATIONS

1. Record the name of the manufacturer, supplier, Installer, and other information necessary to provide a record of selections made.

2. For each principal product, indicate whether Record Product Data has been submitted in operation and maintenance manuals instead of submitted as Record Product Data.

3. Note related Change Orders, Record Drawings, and Product Data where applicable.

2.3 MISCELLANEOUS RECORD SUBMITTALS

A. Assemble miscellaneous records required by other Specification Sections for miscellaneous record keeping and submittal in connection with actual performance of the Work. Assemble into electronic PDF document, bookmarked for each individual specification section and further sub-bookmarked to identify each submittal.

PART 3 - EXECUTION

3.1 RECORDING AND MAINTENANCE

A. Recording: Maintain one copy of each submittal during the construction period for Project Record Document purposes. Post changes and modifications to Project Record Documents as they occur; do not wait until the end of Project.

B. Maintenance of Record Documents and Samples: Store Record Documents and Samples in a minimum of two electronic locations. Provide for automatic electronic backup once every 24 hours. Provide access to Project Record Documents for Architect's reference during normal working hours.

END OF SECTION 017821

SECTION 017823 - OPERATION AND MAINTENANCE DATA

PART 1 - GENERAL

1.1 RELATED DOCUMENTS

A. Drawings and general provisions of the Contract, including General and Supplementary Conditions and other Division 01 Specification Sections, apply to this Section.

1.2 SUMMARY

A. Section includes administrative and procedural requirements for preparing operation and maintenance manuals, including the following:

1. Operation and maintenance documentation directory.
2. Product maintenance manuals.

1.3 CLOSEOUT SUBMITTALS

A. Manual Content: Operations and maintenance manual content is specified in individual Specification Sections to be reviewed at the time of Section submittals. Submit reviewed manual content formatted and organized as required by this Section.

1. Owner will comment on whether content of operations and maintenance submittals are acceptable.
2. Where applicable, clarify and update reviewed manual content to correspond to revisions and field conditions.

B. Format: Submit operations and maintenance manuals in the following format:

1. PDF electronic file. Assemble each manual into a composite electronically indexed file. Submit on digital media acceptable to Owner.

    a. Name each indexed document file in composite electronic index with applicable item name. Include a complete electronically linked operation and maintenance directory.
    b. Enable inserted reviewer comments on draft submittals.

2. Two paper copies. Include a complete operation and maintenance directory. Enclose title pages and directories in clear plastic sleeves.

PART 2 - PRODUCTS

2.1 REQUIREMENTS FOR OPERATION, AND MAINTENANCE MANUALS

A. Organization: Unless otherwise indicated, organize each manual into a separate section for each system and subsystem, and a separate section for each piece of equipment not part of a system. Each manual shall contain the following materials, in the order listed:

1. Title page.
2. Table of contents.
3. Manual contents.

B. Title Page: Include the following information:

1. Subject matter included in manual.
2. Name and address of Project.
3. Name and address of Owner.
4. Date of submittal.
5. Name and contact information for Contractor.

C. Table of Contents: List each product included in manual, identified by product name, indexed to the content of the volume, and cross-referenced to Specification Section number in Project Manual.

D. Manuals, Electronic Files: Submit manuals in the form of a multiple file composite electronic PDF file for each manual type required.

1. Electronic Files: Use electronic files prepared by manufacturer where available. Where scanning of paper documents is required, configure scanned file for minimum readable file size.

E. Manuals, Paper Copy: Submit manuals in the form of hard copy, bound and labeled volumes.

1. Binders: Heavy-duty, three-ring, vinyl-covered, loose-leaf binders, in thickness necessary to accommodate contents, sized to hold 8-1/2-by-11-inch paper; with clear plastic sleeve on spine to hold label describing contents and with pockets inside covers to hold folded oversize sheets.

2.2 PRODUCT MAINTENANCE MANUALS

A. Content: Organize manual into a separate section for each product, material, and finish. Include source information, product information, maintenance procedures, repair materials and sources, and warranties and bonds, as described below.

B. Source Information: List each product included in manual, identified by product name and arranged to match manual's table of contents. For each product, list name, address, and telephone number of Installer or supplier and maintenance service agent, and cross-reference Specification Section number and title in Project Manual and drawing or schedule designation or identifier where applicable.

C. Product Information: Include the following, as applicable:

1. Product name and model number.
2. Manufacturer's name.

3. Color, pattern, and texture.
4. Material and chemical composition.
5. Reordering information for specially manufactured products.

D. Maintenance Procedures: Include manufacturer's written recommendations and the following:

1. Inspection procedures.
2. Types of cleaning agents to be used and methods of cleaning.
3. List of cleaning agents and methods of cleaning detrimental to product.
4. Schedule for routine cleaning and maintenance.
5. Repair instructions.

E. Repair Materials and Sources: Include lists of materials and local sources of materials and related services.

F. Warranties and Bonds: Include copies of warranties and bonds and lists of circumstances and conditions that would affect validity of warranties or bonds.

1. Include procedures to follow and required notifications for warranty claims.

PART 3 - EXECUTION

3.1 MANUAL PREPARATION

A. Operation and Maintenance Documentation Directory: Prepare a manual that provides an organized reference to operation, and maintenance.

1. Product Maintenance Manual: Assemble a complete set of maintenance data indicating care and maintenance of each product, material, and finish incorporated into the Work.

B. Manufacturers' Data: Where manuals contain manufacturers' standard printed data, include only sheets pertinent to product or component installed.

1. Prepare supplementary text if manufacturers' standard printed data are not available and where the information is necessary for proper operation and maintenance of equipment or systems.

END OF SECTION 017823

SECTION 018113.14 - SUSTAINABLE DESIGN REQUIREMENTS - LEED v4 BD+C

PART 1 - GENERAL

1.1 RELATED DOCUMENTS

A. Drawings and general provisions of the Contract, including General and Supplementary Conditions and other Division 01 Specification Sections, apply to this Section.

1.2 DEFINITIONS

A. LEED: USGBC's "LEED Version 4 for Building Design and Construction."

1. Definitions that are a part of "LEED Version 4 for Building Design and Construction" (LEED v4 BD+C) apply to this Section.

B. Chain-of-Custody Certificates: Certificates signed by manufacturers certifying that wood used to make products was obtained from forests certified by an FSC-accredited certification body to comply with FSC STD-01-001. Certificates shall include evidence that manufacturer is certified for chain of custody by an FSC-accredited certification body.

C. Regional Materials: Materials that have been extracted, harvested, or recovered, as well as manufactured, within 100 miles of Project site. If only a fraction of a product or material is extracted/harvested/recovered and manufactured locally, then only that percentage (by weight) shall contribute to the regional value.

D. Recycled Content: The recycled content value of a material assembly shall be determined by weight. The recycled fraction of the assembly is then multiplied by the cost of assembly to determine the recycled content value.

1. "Postconsumer" material is defined as waste material generated by households or by commercial, industrial, and institutional facilities in their role as end users of the product, which can no longer be used for its intended purpose.
2. "Preconsumer" material is defined as material diverted from the waste stream during the manufacturing process. Excluded is reutilization of materials, such as rework, regrind, or scrap, generated in a process and capable of being reclaimed within the same process that generated it.

1.3 PREINSTALLATION MEETINGS

A. Preinstallation Conference: Conduct conference at Project site. Review LEED requirements and action plans for meeting requirements.

1.4 ADMINISTRATIVE REQUIREMENTS

A. Respond to questions and requests from Architect and the USGBC regarding LEED credits that are the responsibility of the Contractor, that depend on product selection or product qualities, or that depend on Contractor's procedures until the USGBC has made its determination on the Project's LEED certification application. Document responses as informational submittals.

B. Submit documentation to USGBC and respond to questions and requests from USGBC regarding LEED credits that are the responsibility of the Contractor, that depend on product selection or product qualities, or that depend on Contractor's procedures until the USGBC has made its determination on the Project's LEED certification application.

1. Document correspondence with USGBC as informational submittals.

1.5 ACTION SUBMITTALS

A. Sustainable Design Documentation Submittals:

1. Environmental Product Declarations complying with LEED requirements.
2. Documentation for products that comply with LEED requirements for multi-attribute optimization.

    a. Include documentation for regional materials, indicating location and distance from Project of material manufacturer and point of extraction, harvest, or recovery for each raw material and costs of regional materials.

3. Sustainability reports for products that comply with LEED requirements for raw material and source extraction reporting.
4. Material ingredient reports for products that comply with LEED requirements for material ingredient reporting.
5. Documentation for products that comply with LEED requirements for material ingredient optimization.
6. Documentation for products that comply with LEED requirements for product manufacturer supply chain optimization.

    a. Include documentation for regional materials, indicating location and distance from Project of material manufacturer and point of extraction, harvest, or recovery for each raw material and costs of regional materials.

7. Documentation complying with Section 017419 "Construction Waste Management and Disposal."
8. Product data for adhesives and sealants used inside the weatherproofing system, indicating VOC content and laboratory test reports showing compliance with requirements for low-emitting materials.
9. Product data for paints and coatings used inside the weatherproofing system, indicating VOC content and laboratory test reports showing compliance with requirements for low-emitting materials.
10. Laboratory test reports for flooring, indicating compliance with requirements for low-emitting materials.
11. Laboratory test reports for products containing composite wood or agrifiber products or wood glues, indicating compliance with requirements for low-emitting materials.

12. Laboratory test reports for ceilings, walls, and thermal insulation, indicating compliance with requirements for low-emitting materials.
13. Construction Indoor-Air-Quality (IAQ) Management:

    a. Construction IAQ management plan.
    b. Product data for temporary filtration media.
    c. Product data for filtration media used during occupancy.
    d. Construction Documentation: Six photographs at three different times during the construction period, along with a brief description of the SMACNA approach employed, documenting implementation of the IAQ management measures, such as protection of ducts and on-site stored or installed absorptive materials.

14. IAQ Assessment:

    a. Signed statement describing the building air flush-out procedures, including the dates when flush-out was begun and completed and statement that filtration media was replaced after flush-out.
    b. Product data for filtration media used during flush-out and occupancy.
    c. Report from testing and inspecting agency indicating results of IAQ testing and documentation showing compliance with IAQ testing procedures and requirements.

1.6 INFORMATIONAL SUBMITTALS

A. Project Materials Cost Data: Provide statement indicating total cost for materials used for Project. Costs exclude labor, overhead, and profit. Include breakout of costs for the following categories of items:

    1. Plumbing.
    2. Mechanical.
    3. Electrical.
    4. Specialty items, such as elevators and equipment.

B. Sustainable Design Action Plans: Provide preliminary submittals within [seven] [14] [30] [60] <Insert number> days of date established for [commencement of the Work] [the Notice to Proceed] [the Notice of Award], indicating how the following requirements will be met:

    1. List of proposed products with Environmental Product Declarations.
    2. List of proposed products complying with requirements for raw material and source extraction reporting.
    3. List of proposed products complying with requirements for material ingredient reporting.
    4. Waste management plan complying with Section 017419 "Construction Waste Management and Disposal."
    5. Construction IAQ management plan.

C. Sustainable Design Progress Reports: Concurrent with each Application for Payment, submit reports comparing actual construction and purchasing activities with sustainable design action plans.

PART 2 - PRODUCTS

2.1 MATERIALS

A. Provide products and procedures necessary to obtain LEED credits required in this Section. Although other Sections may specify some requirements that contribute to these LEED credits, the Contractor shall provide additional materials and procedures necessary to obtain LEED credits indicated.

B. At least 20 different products from at least five different manufacturers shall have Environmental Product Declarations that comply with LEED requirements. Industry-wide (generic) Environmental Product Declarations shall be valued as one-half of a product.

C. At least 50 percent, by cost, of the permanently installed products for the Project shall comply with LEED requirements for multi-attribute optimization.

D. At least 20 different products from at least five different manufacturers shall have publically released reports that comply with LEED requirements for raw material source and extraction reporting. Self-declared reports by manufacturers shall be valued as one-half of a product.

E. At least 20 different products from at least five different manufacturers shall comply with LEED requirements for material ingredient reporting.

F. At least 25 percent, by cost, of the permanently installed products for the Project shall comply with LEED requirements for material ingredient optimization.

G. At least 25 percent, by cost, of the permanently installed products for the Project shall comply with LEED requirements for product manufacturer supply chain optimization.

H. Not less than 25 percent of building materials, by cost, shall comply with LEED requirements for leadership extraction practices.

1. Structure and enclosure materials shall not be more than 30 percent, by cost, of the materials used to comply with this requirement.

I. Extended Producer Responsibility Program: Not less than <Insert number> percent of building materials, by cost, shall be manufactured by a participant in an extended producer responsibility program.

J. Recycled Content: Building materials shall have recycled content such that postconsumer recycled content plus one-half of preconsumer recycled content for Project constitutes a minimum of <Insert number> percent of cost of materials used for Project.

1. Cost of postconsumer recycled content plus one-half of preconsumer recycled content of an item shall be determined by dividing weight of postconsumer recycled content plus one-half of preconsumer recycled content in the item by total weight of the item and multiplying by cost of the item.
2. Do not include [furniture,]plumbing, mechanical and electrical components, and specialty items, such as elevators and equipment, in the calculation.

K. Certified Wood: Not less than <Insert number> percent, by cost, of wood-based materials shall be produced from wood obtained from forests certified by an FSC-accredited certification body to comply with FSC STD-01-001.

2.2 LOW-EMITTING MATERIALS

A. Paints and Coatings: For field applications[that are inside the weatherproofing system], paints and coatings shall comply with VOC content limits of authorities having jurisdiction and the following VOC content limits:

1. Flat Paints and Coatings: 50 g/L.
2. Nonflat Paints and Coatings: 50 g/L.
3. Dry-Fog Coatings: 150 g/L.
4. Primers, Sealers, and Undercoaters: 100 g/L.
5. Rust-Preventive Coatings: 100 g/L.
6. Zinc-Rich Industrial Maintenance Primers: 100 g/L.
7. Pretreatment Wash Primers: 420 g/L.
8. Floor Coatings: 50 g/L.

B. Paints and Coatings: For field applications that are inside the weatherproofing system, 90 percent of paints and coatings shall comply with the requirements of the California Department of Public Health's "Standard Method for the Testing and Evaluation of Volatile Organic Chemical Emissions from Indoor Sources Using Environmental Chambers."

C. Adhesives and Sealants: For field applications[that are inside the weatherproofing system], adhesives and sealants shall comply with VOC content limits of authorities having jurisdiction and the following VOC content limits:

1. Wood Glues: 30 g/L.
2. Metal-to-Metal Adhesives: 30 g/L.
3. Adhesives for Porous Materials (Except Wood): 50 g/L.
4. Subfloor Adhesives: 50 g/L.
5. Plastic Foam Adhesives: 50 g/L.
6. Carpet Adhesives: 50 g/L.
7. Carpet Pad Adhesives: 50 g/L.
8. VCT and Asphalt Tile Adhesives: 50 g/L.
9. Cove Base Adhesives: 50 g/L.
10. Gypsum Board and Panel Adhesives: 50 g/L.
11. Rubber Floor Adhesives: 60 g/L.
12. Ceramic Tile Adhesives: 65 g/L.
13. Multipurpose Construction Adhesives: 70 g/L.
14. Fiberglass Adhesives: 80 g/L.
15. Contact Adhesives: 80 g/L.
16. Structural Glazing Adhesives: 100 g/L.
17. Wood Flooring Adhesives: 100 g/L.
18. Structural Wood Member Adhesives: 140 g/L.
19. Single-Ply Roof Membrane Adhesives: 250 g/L.
20. Special-Purpose Contact Adhesives (That Are Used to Bond Melamine-Covered Board, Metal, Unsupported Vinyl, Rubber, or Wood Veneer 1/16 Inch or Less in Thickness to Any Surface): 250 g/L.
21. Top and Trim Adhesives: 250 g/L.

22. Plastic Cement Welding Compounds: 250 g/L.
23. ABS Welding Compounds: 325 g/L.
24. CPVC Welding Compounds: 490 g/L.
25. PVC Welding Compounds: 510 g/L.
26. Adhesive Primer for Plastic: 550 g/L.
27. Sheet-Applied Rubber Lining Adhesives: 850 g/L.
28. Aerosol Adhesive, General-Purpose Mist Spray: 65 percent by weight.
29. Aerosol Adhesive, General-Purpose Web Spray: 55 percent by weight.
30. Special-Purpose Aerosol Adhesives (All Types): 70 percent by weight.
31. Other Adhesives: 250 g/L.
32. Architectural Sealants: 250 g/L.
33. Nonmembrane Roof Sealants: 300 g/L.
34. Single-Ply Roof Membrane Sealants: 450 g/L.
35. Other Sealants: 420 g/L.
36. Sealant Primers for Nonporous Substrates: 250 g/L.
37. Sealant Primers for Porous Substrates: 775 g/L.
38. Modified Bituminous Sealant Primers: 500 g/L.
39. Other Sealant Primers: 750 g/L.

D. Adhesives and Sealants: For field applications that are inside the weatherproofing system, 90 percent of adhesives and sealants shall comply with the requirements of the California Department of Public Health's "Standard Method for the Testing and Evaluation of Volatile Organic Chemical Emissions from Indoor Sources Using Environmental Chambers."

E. Flooring: Flooring shall comply with the requirements of the California Department of Public Health's "Standard Method for the Testing and Evaluation of Volatile Organic Chemical Emissions from Indoor Sources Using Environmental Chambers."

F. Composite Wood: Composite wood, agrifiber products, and adhesives shall be made using ultra-low-emitting formaldehyde resins as defined in the California Air Resources Board's "Airborne Toxic Control Measure to Reduce Formaldehyde Emissions from Composite Wood Products" or shall be made with no added formaldehyde.

G. Ceilings, Walls, and Thermal Insulation: Ceilings, walls, and thermal insulation shall comply with the requirements of the California Department of Public Health's "Standard Method for the Testing and Evaluation of Volatile Organic Chemical Emissions from Indoor Sources Using Environmental Chambers."

PART 3 - EXECUTION

3.1 NONSMOKING BUILDING

A. Smoking is not permitted within the building or within 25 feet of entrances, operable windows, or outdoor-air intakes.

3.2 CONSTRUCTION WASTE MANAGEMENT

A. Comply with Section 017419 "Construction Waste Management and Disposal."

3.3 CONSTRUCTION IAQ MANAGEMENT

A. Comply with SMACNA's "SMACNA IAQ Guideline for Occupied Buildings under Construction."

1. If Owner authorizes use of permanent heating, cooling, and ventilating systems during construction period as specified in Section 015000 "Temporary Facilities and Controls," install MERV 8 filter media at each return-air inlet for the air-handling system used during construction.
2. Replace air filters immediately prior to occupancy.

3.4 IAQ ASSESSMENT

A. Flush-Out:

1. After construction ends, prior to occupancy and with all interior finishes installed, perform a building flush-out by supplying a total volume of 14,000 cu. ft. of outdoor air per sq. ft. of floor area while maintaining an internal temperature of at least 60 deg F and a relative humidity no higher than 60 percent.

   a. <Insert operating requirements>.

2. If occupancy is desired prior to flush-out completion, the space may be occupied following delivery of a minimum of 3500 cu. ft. of outdoor air per sq. ft. of floor area to the space. Once a space is occupied, it shall be ventilated at a minimum rate of 0.30 cfm per sq. ft. of outside air or the design minimum outside-air rate, whichever is greater. During each day of the flush-out period, ventilation shall begin a minimum of three hours prior to occupancy and continue during occupancy. These conditions shall be maintained until a total of 14,000 cu. ft./sq. ft. of outside air has been delivered to the space.

   a. <Insert operating requirements>.

B. Air-Quality Testing: Engage testing agency to perform the following:

1. Conduct baseline IAQ testing, after construction ends and prior to occupancy, using testing protocols consistent with the EPA's "Compendium of Methods for the Determination of Air Pollutants in Indoor Air," and as additionally detailed in the USGBC's "LEED Reference Guide for Building Design and Construction."
2. Demonstrate that the contaminant maximum concentrations listed below are not exceeded:

   a. Formaldehyde: 27 ppb.
   b. Particulates (PM10): 50 micrograms/cu. m.
   c. Ozone: 0.075 ppm, according to ASTM D 5149.
   d. Total Volatile Organic Compounds: 500 micrograms/cu. m.
   e. 4-Phenylcyclohexene (4-PH): 6.5 micrograms/cu. m.
   f. Carbon Monoxide: 9 ppm and no greater than 2 ppm above outdoor levels.
   g. Target Chemicals in California Department of Public Health "Standard Method for the Testing and Evaluation of Volatile Organic Chemical Emissions from Indoor Sources Using Environmental Chambers," Table 4-1 (except formaldehyde): Allowable concentrations in California Department of Public Health "Standard Method for the Testing and Evaluation of Volatile Organic Chemical Emissions from Indoor Sources Using Environmental Chambers," Table 4-1.

3. For each sampling point where the maximum concentration limits are exceeded, take corrective action until requirements have been met.
4. Air-sample testing shall be conducted as follows:

    a. All measurements shall be conducted prior to occupancy but during normal occupied hours, and with building ventilation system starting at the normal daily start time and operated at the minimum outside-air flow rate for the occupied mode throughout the duration of the air testing.
    b. Building shall have all interior finishes installed, including, but not limited to, millwork, doors, paint, carpet, and acoustic tiles. Nonfixed furnishings, such as workstations and partitions, are encouraged, but not required, to be in place for the testing.
    c. Number of sampling locations varies depending on the size of building and number of ventilation systems. For each portion of building served by a separate ventilation system, the number of sampling points shall not be less than one per 5000 sq. ft..
    d. Air samples shall be collected between 3 and 6 feet from the floor to represent the breathing zone of occupants, and over a minimum four-hour period.

END OF SECTION 018113.14

SECTION 019100 - GENERAL COMMISSIONING REQUIREMENTS

PART 1 - GENERAL

1.1 RELATED DOCUMENTS

A. Drawings and general provisions of the Contract, including General and Supplementary Conditions and Division 01 Specification Sections, apply to this Section.

1.2 SUMMARY

A. The Commissioning Authority referenced herein is to be hired under a separate contract directly by the owner. Information regarding the Commissioning Authority is provided for reference only. The contractor shall be responsible for coordinating with and providing field support to the Commissioning Authority for performance of commissioning duties.

B. Section includes general requirements that apply to implementation of commissioning without regard to specific systems, assemblies, or components.

C. Commissioning is systematic processes that provides documented confirmation that building systems perform according to the criteria set forth in the design intent and satisfy the owner's operational needs.

D. The commissioning process does not take away from or reduce the responsibility of the system designers, installing contractors, or general contractor to provide a finished and fully functioning product.

E. Abbreviations. The following are common abbreviations used in the *Specifications* and in the *Commissioning Plan.* Definitions are found in Section 1.4.

A/E – Architect and Design Engineers	GC – General Contractor
CxA – Commissioning Agent	MC – Mechanical Contractor
CC – Controls Contractor	OR – Owner's Representative
TAB – Testing And Balancing Contractor	Cx Commissioning
Subs – Subcontractors to General	EC – Electrical Contractor

F. The commissioning activities shall be developed and customized for the project and the systems to be commissioned in accordance with applicable industry standards and based on guidelines set forth in ASHRAE 1.1-2007 and current ACG Commissioning Guidelines.

G. Related Sections:

1. Division 22 Section "Commissioning of HVAC" for commissioning process activities for HVAC&R systems, assemblies, equipment, and components.
2. Division 23 Section "Commissioning of Plumbing" for commissioning process activities plumbing systems, assemblies, equipment, and components.
3. Division 26 Section "Commissioning of Electrical Systems" for commissioning process activities for electrical systems, assemblies, equipment, and components.

1.3 SYSTEMS TO BE COMMISSIONED

A. The following systems will be commissioned in this project.
   1. All Heating, Ventilating, Air Conditioning, and Refrigeration (HVAC&R) systems (mechanical and passive) including associated Building Automation Control System.
   2. Lighting and Lighting Controls
   3. Power Circuitry serving HVAC Systems and Equipment
   4. Domestic Hot Water Systems
   5. Power Circuitry serving Domestic Water Heating Systems and Equipment

1.4 DEFINITIONS

A. Acceptance Phase. Phase of construction after startup and initial checkout when functional performance tests, O&M documentation review and training occurs.

B. Approval. Acceptance that a piece of equipment or system has been properly installed and is functioning in the tested modes according to the Contract Documents.

C. Architect/Engineer (A/E): The prime consultant (architect) and sub-consultants who comprise the design team, generally the HVAC mechanical designer/engineer and the electrical designer/engineer.

D. BOD: Basis of Design. A document that records concepts, calculations, decisions, and product selections used to meet the OPR and to satisfy applicable regulatory requirements, standards, and guidelines. The document includes both narrative descriptions and lists of individual items that support the design process.

E. CxA: Commissioning Authority. An independent agent, not otherwise associated with the A/E team members or the Contractor to verify that the installed systems satisfy the owners project requirements. The CxA directs and coordinates the commissioning activities.

F. Cx Plan: Commissioning Plan: A document that outlines the organization, schedule, allocation of resources, responsibilities of the commissioning team, and documentation requirements of the commissioning process.

G. Data logging: Monitoring flows, temperatures, humidity, occupancy, sound levels, status, pressures, etc. of equipment and/or systems using stand-alone data loggers separate from the control system.

H. Deferred Functional Tests : Functional tests that are performed after substantial completion due to partial occupancy, equipment, seasonal requirements, design or other site conditions that disallow the test from being performed.

I. Deficiency: A condition in the installation or function of a component, piece of equipment or system that is not in compliance with code, industry standard, owner's requirements, or the contract documents.

J. Design Intent: The dynamic of the design documents that provide the explanation of the ideas, concepts and criteria that are considered to be essential to the owner and success of the project. It is also initially the outcome of the programming and conceptual design phases.

K. Factory Testing: Testing of equipment at the factory or on-site by factory personnel with an Owner's representative present.

L. Functional Performance Test (FPT): Test of the dynamic function and operation of completed installations of equipment and systems using manual (direct observation) and/or monitoring methods. Functional testing is the dynamic testing of systems (rather than just components) under full operation. Systems are tested under various modes and are demonstrated to operate through all the control system's sequences of operation and components are verified to be responding as the sequences state. The commissioning authority develops the functional test procedures in a sequential written form, coordinates, oversees and documents the actual testing, which is performed by the installing contractor or vendor. FPTs are performed after pre-functional checklists are completed by the contractor, test and balance is finalized without issues, controls checkout is complete and documented, and equipment and system startup are complete.

M. General Contractor (GC): The general contractor for this project. May generally refer to all the GC's subcontractors as well. Also referred to as the Contractor, in some contexts.

N. Monitoring: The recording of parameters (flow, temperature, current, status, pressure, etc.) of equipment operation using data loggers or the trending capabilities of control systems.

O. Non-Compliance: See Deficiency.

P. Non-Conformance: See Deficiency.

Q. OPR: Owner's Project Requirements. A document that details the functional requirements of a project and the expectations of how it will be used and operated. These include Project goals, measurable performance criteria, cost considerations, benchmarks, success criteria, and supporting information.

R. Pre-functional Checklist: A record of equipment installation provided by the CxA to the Sub. Equipment checklists are primarily static inspections to verify that installation is in compliance with project documents and document procedures to prepare the equipment or system for initial operation. Pre-functional checklist items may include simple testing of the function of a component, a piece of equipment or system. Equipment checklists augment and are to be combined with the installing contractor's quality assurance means and methods and the manufacturer's start-up checklist. The Pre-functional Checklists shall be completed by the installing contractors, reviewed and signed by the GC, and submitted to the CxA prior to functional testing. Pre-Functional Checklist sign offs and entries are to follow and remain current with construction progress.

S. Sampling: Functionally testing only a fraction of the total number of identical or near identical pieces of equipment.

T. Seasonal Performance Tests: FPTs that are deferred until the system(s) will experience conditions closer to their design conditions.

U. Systems, Subsystems, Equipment, and Components: Where these terms are used together or separately, they shall mean "as-built" systems, subsystems, equipment, and components.

V. Startup: The initial starting or activating of dynamic equipment, including executing pre-functional checklists.

W. Subs: The subcontractors to the GC who provide and install building components and systems.

X. Trending: Monitoring using the building control system.

1.5 COORDINATION

A. **Commissioning Team**. The members of the commissioning team consist of the Commissioning Authority (CxA), the Owner's Representative (OR), assigns of the General Contractor (GC or Contractor), the architect and design engineers (A/E), the applicable Mechanical Contractors (MC), [HVAC & Plumbing], the Electrical Contractor (EC), the TAB representative, the Building Automation Controls Contractor (CC), any other necessary installing subcontractors or suppliers of equipment.

B. **Management**. The CxA directs and coordinates the commissioning activities and reports to the OR. All members work together to fulfill their contracted responsibilities and meet the objectives of the Contract Documents.

C. **Scheduling**. The CxA will work with the GC according to established protocols to schedule the commissioning activities. The CxA will provide sufficient notice to the GC for scheduling commissioning activities. The GC will integrate all commissioning activities into the master schedule. All parties will address scheduling problems and make necessary notifications in a timely manner in order to expedite the commissioning process.

D. The CxA will provide the initial schedule of primary commissioning events at the commissioning kickoff meeting. The *Commissioning Plan* provides a format for this schedule. As construction progresses all necessary additional detailed schedules are developed by the CxA. The Commissioning Plan also provides a format for detailed schedules.

1.6 COMMISSIONING PROCESS

A. **Commissioning Plan**. The commissioning plan is developed and updated by the commissioning authority and provides guidance in the execution of the commissioning process. The *specifications* will take precedence over the *Commissioning Plan*.

B. **Commissioning Process**. The following narrative provides a brief overview of the typical commissioning tasks during construction and the general order in which they occur.

1. The Commissioning Plan will be presented and discussed during the Commissioning Kickoff Meeting. The meeting will be conducted by the CxA and will review the commissioning process, commissioning schedule, and team member responsibilities.
2. Additional commissioning meetings will be required throughout construction, scheduled by the CxA with necessary parties attending, to plan, scope, coordinate, schedule future activities and resolve issues.
3. The CxA shall conduct a review of all necessary related design documents and amended directives prior to equipment installation and acceptance.
4. Submittals and associated equipment documentation is submitted to the CxA. The CxA shall review contractor submittals applicable to systems being commissioned for compliance with the project specifications, OPR and BOD. The review shall be concurrent to the A/E submittal review.
5. Pre-functional Checklists are provided by the CxA for each piece of equipment and/or system to be commissioned. The Subs, as directed by the CxA, under their own incentive, execute and document the pre-functional checklists and perform startup and initial checkout. The GC shall review the completed checklists, sign to acknowledge to the best of their ability the checklists are complete, and provide to the CxA. The CxA documents that the checklists and startup were completed according to the approved plans. This may include the CxA witnessing start-up of selected equipment.
6. The CxA develops specific equipment and system functional performance test procedures. The Subs shall review the procedures and provide comment within two (2) weeks after issuance.
7. The functional test procedures are executed by the Subs, under the direction of, and documented by the CxA. Required participants for functional testing will be provided in advance by the CxA on each functional test procedure test form.
8. Items of non-compliance in material, installation, setup, and/or operation will be documented by the CxA and shall be corrected by the responsible Sub-Contractor's and at their expense. Additional efforts and any additional cost associated with non-conformance shall be subject to terms outlined in Section 3.6 B (Non-Conformance).
9. Commissioning functional testing shall be completed as a requirement for project Substantial Completion.

10. The CxA will verify that the requirements for training operating personnel and building occupants have been completed.

1.7 COMMISSIONING TEAM

A. Members Appointed by Contractor(s): Individuals, each having the authority to act on behalf of the entity he or she represents, explicitly organized to implement the commissioning process through coordinated action. The commissioning team shall consist of, but not be limited to, representatives of the Contractor, including Project superintendent and subcontractors, installers, suppliers, and specialists deemed appropriate by the CxA.

B. Members Appointed by the Owner:

1. CxA: The designated person, company, or entity that plans, schedules, and coordinates the commissioning team to implement the commissioning process. Owner will engage the CxA under a separate contract.
2. Representatives of the facility user and operation and maintenance personnel.
3. Architect and engineering design professionals.

1.8 OWNER'S RESPONSIBILITIES

A. Provide tall appropriate project documentation to the CxA and Contractor for information and use.

B. Assign operation and maintenance personnel and schedule them to participate in commissioning team activities.

C. Coordinate activities specified in paragraph below with Owner-Architect and Architect-Consultant agreements.

D. Provide the BOD documentation, prepared by Architect and approved by Owner, to the CxA and Contractor for use in developing the commissioning plan, systems manual, and operation and maintenance training plan.

E. Follow the Commissioning Plan.

F. Attend commissioning kickoff meeting and additional meetings as necessary.

1.9 ARCHITECT/ENGINEERS (AE) RESPONSIBILITIES

A. The AE shall participate in and perform commissioning process activities including, but not limited to, the following:

1. Attend the commissioning kickoff meeting and selected commissioning team meetings.
2. Perform normal submittal review, construction observation, as-built drawing preparation, O&M manual preparation, etc., as contracted.
3. Provide the Basis of Design (BOD) documentation and any design narrative and sequence documentation requested by the CxA. The designers shall assist (along with the contractors) in clarifying the operation and control of commissioned equipment in areas where the specifications, control drawings or equipment documentation may not be sufficient for writing detailed testing procedures.
4. Provide written response to each commissioning design review comment, submittal review comment, and design-related construction phase deficiency within two (2) weeks of issuance by the CxA.
5. Participate in the resolution of non-compliance, non-conformance and design deficiencies identified during commissioning during design, construction and warranty-period commissioning.

1.10 GENERAL CONTRACTOR'S RESPONSIBILITIE

A. C Contractor shall assign representatives with expertise and authority to act on its behalf and shall schedule them to participate in, and perform commissioning process activities including, but not limited to, the following:

1. Facilitate the coordination of the commissioning work by the CxA and ensure that commissioning activities are being scheduled into the master schedule.
2. Follow the Commissioning Plan.
3. Attend commissioning kickoff meetings and additional meetings as necessary. Assist in coordination and scheduling of meetings as requested by the CxA.
4. Review and approve the final *Commissioning Plan*.
5. Furnish a copy of all construction documents, addenda, requests for information, change orders and approved submittals and shop drawings related to commissioned equipment to the CxA.
6. Review and approve the functional performance test procedures submitted by the CxA within two (2) weeks of issuance by the CxA.
7. With the assistance of the subcontractors, coordinate and ensure that the commissioning process functional test procedures are executed for each system. Coordinate retesting as required.
8. Review commissioning progress and deficiency reports. Evaluate performance deficiencies identified in test reports and, in collaboration with entity responsible for system and equipment installation, recommend corrective action.
9. Coordinate the resolution of non-compliance and design deficiencies identified in all phases of commissioning. Review commissioning progress and deficiency reports and provide written response to each issue within two (2) weeks of issuance by the CxA and weekly until the issue is resolved.
10. Upon completion of equipment installation and within one (1) week of scheduled commissioning functional testing, review, approve, and sign the completed Pre-functional Checklists and provide copies to the CxA for each piece of equipment and/or system to be commissioned. The Subs, under their own direction, execute and document the pre-functional checklists and perform startup and initial checkout.
11. Collect and review Training Agendas and provide copies to the CxA for review. Provide the Training Plan and coordinate the training of Owner personnel.
12. Within two (2) weeks of scheduled commissioning functional testing, in coordination with the controls contractor, provide a list of final settings, setpoints, ranges, schedules, and / or trend logs required by the CxA.

1.11 SUB CONTRACTOR'S RESPONSIBILITIES

A. Contractor shall assign representatives with expertise and authority to act on its behalf and shall schedule them to participate in and perform commissioning process activities including, but not limited to, the following:

1. Follow the Commissioning Plan.
2. Attend commissioning kickoff meeting and additional commissioning meetings.
3. Accept full responsibility, complete and sign each Commissioning Pre-functional Checklist for systems to be commissioned as provided by the CxA at least one (1) week prior to functional testing.
4. Perform commissioning functional test procedures under the direction of the CxA.
5. Review and respond to each Commissioning Issue as identified on commissioning progress and deficiency reports. Where responsible for system and equipment installation, recommend corrective action for all issues identified. Provide a written response to each issue within one (1) weeks of issuance by the CxA and weekly until the issue is resolved.
6. Execute the resolution of non-compliance and deficiencies identified. Perform retesting as required.

7. Include all special tools and instruments (only available from vendor, specific to a piece of equipment) required for testing equipment according to these Contract Documents in the base bid price to the Contractor, except for stand-alone data logging equipment that may be used by the CxA.
8. Provide information requested by CxA regarding equipment sequence of operation and testing procedures.
9. Provide equipment Training Agenda for each system to be commissioned within six (6) weeks of submittal acceptance. Conduct operations & maintenance training per project specifications.

1.12 TEMPERATURE CONTROLS CONTRACTOR'S RESPONSIBILITIES

A. Contractor shall assign representatives with expertise and authority to act on its behalf and shall schedule them to participate in and perform commissioning process activities including, but not limited to, the following:
   1. Follow the Commissioning Plan.
   2. Attend commissioning kickoff meeting and additional commissioning meetings.
   3. Complete and sign each Commissioning Pre-functional Checklist for systems to be commissioned as provided by the CxA at least one (1) week prior to functional testing.
   4. Perform commissioning functional test procedures under the direction of the CxA.
   5. Review and respond to each Commissioning Issue as identified on commissioning progress and deficiency reports. Where responsible for system and equipment installation, recommend corrective action for all issues identified. Provide a written response to each issue within one (1) weeks of issuance by the CxA and weekly until the issue is resolved.
   6. Execute the resolution of non-compliance and deficiencies identified. Perform retesting as required.
   7. Provide information requested by CxA regarding equipment sequence of operation and testing procedures.
   8. Provide equipment Training Agenda for system within six (6) weeks of submittal acceptance. Conduct operations & maintenance training per project specifications.

B. The Controls Contractor shall provide a network in the building for use during controls programming, checkout, and commissioning. This network will allow project team members to more effectively program, view, manipulate and test control devices while being in the same room as the controlled device.

C. Prior to commissioning Functional Performance Testing, the Contractor is required to provide Point-to-Point checkout documentation, loop tuning documentation and constants for each loop of the building systems, and a record of sensor field calibration. Any documentation that is modified after submission shall be recorded and resent as As-Built records.

D. A sensor calibration table listing the referencing the location and the frequency at which calibration should be performed for all sensors and actuators, separated by system, sub-system, and type. The calibration requirements shall be submitted both in the O&M manuals and separately in a standalone document containing all sensors for inclusion in the commissioning documentation.

E. The Controls Contractor shall provide graphical trending through the DDC control system of systems being commissioned. Trending requirements will be dictated by the CxA and included with the Functional Performance Test Procedures and/or determined while execution of testing. The trend log points, sampling rate, graphical plot configuration, and duration will be dictated by the CxA. At any time during the Commissioning Process the CxA may dictate changes to aspects of trending as deemed necessary for proper system analysis. No changes in trending requirements will be a basis for additional service change orders by the Contractor. The Controls Contractor shall be responsible for producing data and graphical representations of the trended DDC points that show each system operating

properly during steady state conditions as well as during the functional tests.. The Controls Contractor is required to provide, but not limited to, the following trend requirements and trend submissions:

1. The Controls Contractor shall submit pre-testing trends one week in advance of functional testing for each system. Any pre-test trend analysis comments generated by the Commissioning Team will be addressed and resolved by the Contractor prior to the execution of Functional Performance Testing.
2. The Controls Contractor shall submit trends for the duration of Functional Testing.
3. The Controls Contractor shall submit post-testing trends as requested by the CxA to verify operation, seasonal operation, and/or deficiency resolution.

1.13 CxA'S RESPONSIBILITIES

A. The CxA is not responsible for design concept, design criteria, compliance with codes, design or general construction scheduling, cost estimating, or construction management. The CxA may assist with problem-solving non-conformance or deficiencies. The primary role of the CxA is to develop and coordinate the execution of a testing plan, observe and document performance—that systems are functioning in accordance with the documented design intent and in accordance with the Contract Documents. The Contractors will provide all tools or the use of tools to start, check-out and functionally test equipment and systems, except for specified testing with portable data-loggers, which shall be supplied and installed as necessary by the CxA.

1. Coordinate and direct the commissioning activities using consistent protocols and forms, centralized documentation, clear and regular communications and consultations with all necessary parties, frequently updated timelines and schedules and technical expertise.
2. Create, execute, and revise, as necessary, the Commissioning Plan.
3. Coordinate the commissioning work and ensure that commissioning activities are being scheduled into the master schedule.
4. Review the owner’s project requirements and basis of design documents for clarity and completeness.
5. Conduct a commissioning design review of the design documents prior to the mid-construction documents phase and back-check the review comments in the subsequent design submittal.
6. Plan and conduct a commissioning kickoff meeting and other commissioning meetings. Provide meeting minutes within one (1) week of meeting date.
7. Review and comment on normal Contractor submittals applicable to systems being commissioned for compliance with the OPR and BOD, concurrent with the A/E reviews.
8. Assist in the resolution of issues identified during the commissioning process. Maintain a master deficiency and resolution log (Issues Log). Provide the commissioning team with written progress reports and test results with recommended actions.
9. Write and distribute Pre-functional Checklists and Functional Test Procedures. Incorporate comments from the commissioning team as required.
10. Perform site visits, as necessary, to observe component and system installations. Attend selected planning and job-site meetings to obtain information on construction progress. Review construction meeting minutes for revisions/substitutions relating to the commissioning process. Assist in resolving any discrepancies.
11. Review and approve completed Pre-functional Checklists thru onsite observation and review of contractor reports and startup documentation.
12. Analyze any functional performance trend logs and monitoring data to verify performance.
13. Coordinate, witness and approve manual functional performance tests performed by installing contractors. Coordinate retesting as necessary until satisfactory performance is achieved.

14. Verify that the training requirements for operating personnel and building occupants have been completed. Review training agendas and training plan prior to onsite operations and maintenance training.
15. Provide a Final Commissioning Report.

1.14 COMMISSIONING DOCUMENTATION

A. Provide the following information to the CxA for inclusion in the commissioning plan:

1. Plan for delivery and review of submittals, systems manuals, and other documents and reports.
2. Identification of installed systems, assemblies, equipment, and components including design changes that occurred during the construction phase.
3. Process and schedule for completing construction checklists and manufacturer's prestart and startup checklists for HVAC&R systems, assemblies, equipment, and components to be verified and tested.
4. Certificate of completion certifying that installation, prestart checks, and startup procedures have been completed.
5. Certificate of readiness certifying that HVAC&R systems, subsystems, equipment, and associated controls are ready for testing.
6. Test and inspection reports and certificates.
7. Corrective action documents.
8. Verification of testing, adjusting, and balancing reports.

1.15 SUBMITTALS

A. Certificates of readiness.

B. Certificates of completion of installation, prestart, and startup activities.

PART 2 - PRODUCTS

2.12 TEST EQUIPMENT

A. All standard testing equipment required to perform startup and initial checkout and required functional performance testing shall be provided by the Division contractor for the equipment being tested. For example, the mechanical contractor of Division 23 shall ultimately be responsible for all standard testing equipment for the HVAC system and controls system in Division 23, except for equipment specific to and used by TAB in their commissioning responsibilities. The appropriate two-way communication means required during testing procedures shall be determined through coordination and input from the owner as not to interfere with any ongoing surrounding operations.

B. All testing equipment shall be of sufficient quality and accuracy to test and/or measure system performance with the tolerances specified in the *Specifications.* If not otherwise noted, the following minimum requirements apply: Temperature sensors and digital thermometers shall have a certified calibration within the past year to within an accuracy of 0.5°F and a resolution of [+ or - 0.1°F]. Pressure sensors shall have an accuracy of + or - 2.0% of the value range being measured (not full range of meter) and have been calibrated within the last year. All equipment shall be calibrated according to the manufacturer’s recommended intervals and when dropped or damaged. Calibration tags shall be affixed or certificates readily available.

PART 3 - EXECUTION

3.12 MEETINGS

A. Commissioning Kickoff Meeting. The CxA will schedule, plan and conduct a commissioning kickoff meeting with the entire commissioning team in attendance. The Commissioning Plan shall be reviewed and discussed. Meeting minutes will be distributed to all parties by the CxA.

B. Miscellaneous Commissioning Meetings. The commissioning team shall attend additional commissioning meetings as planned and conducted by the CxA. These meetings will cover coordination, commissioning scheduling, planning issues, and deficiency resolution. For efficiency, commissioning meetings shall be coordinated, as practical and possible to coincide with other meetings such as routine progress meetings.

3.13 REPORTING

A. The CxA will provide regular reports to the GC and the OR, with increasing frequency as construction and commissioning progresses, including keeping the commissioning team apprised of commissioning progress and scheduling changes through memos, progress reports, test reports, and meeting minutes.

B. The CxA shall provide the Commissioning Issues Log and updates to the commissioning team.

C. A Final Commissioning Report by the CxA will be provided to the OR, focusing on documenting the executed commissioning process. All acquired commissioning documentation, logs, minutes, reports, deficiency lists, communications, findings, unresolved issues, etc., will be included with the Final Commissioning Report. Completed pre-functional checklists and executed functional tests will also be included.

The final Operations & Maintenance Manuals for the commissioned systems shall be provided to the CxA for review. The CxA's review of the completed O&M manuals shall verify content is complete, sufficient, well organized and suitable for owner use.

3.14 SUBMITTALS

A. The commissioning process requires Submittal review simultaneously with engineering review for all equipment associated with systems to be commissioned.

B. The Commissioning authority will review and provide comment on submittals related to the commissioned equipment for general conformance to the Contract Documents as it relates to the commissioning process. Commissioning reviews are primarily focused to confirm clarity and completeness of submittal packages. The Commissioning authority will formally notify the GC, Owner Representative, or A/E appropriately, regarding any items of concern. Items of concern may include but not be limited to, additional information needed, non-conformance, contradictions and/or lack of coordination between equipment and systems as well as any concerns with continued operations and maintainability.

C. The final approval of submittals are the responsibility of the Design Team, though the CxA will review and offer comment and recommendation.

D. Contractor’s responsibility for deviations in submittals from requirements of the Contract Documents is not relieved by the Commissioning Authority’s review.

3.15 PRE-FUNCTIONAL CHECKLISTS

A. The following procedures apply to all equipment to be commissioned, according to Section 1.3, Systems to be Commissioned.

B. Equipment pre-functional checklists will be created by the CxA and distributed to the commissioning team for completion. No sampling strategies are used. The completion of the form with contractor signature ensures that functional performance testing may proceed without unnecessary delays. Equipment startup reports and associated required contractor test reports shall be attached to the associated pre-functional checklists. The completed pre-functional checklists shall be submitted to the CxA no later than one (1) week in advance of functional testing.

1. When formally signing off on or, confirming checklist items, signatures may be required of other Subs for verification of completion of their work.
2. The CxA shall verify the sub-contractor's checklists procedures at his/her discretion as deemed practical and necessary.
3. The Subs and vendors shall execute startup and provide the CxA with a signed and dated copy of the completed start-up and pre-functional tests and checklists.
4. Only individuals that have direct knowledge and witnessed that a line item task on the pre-functional checklist was actually performed shall initial or check that item off.
5. The Subs shall clearly list any outstanding items of the initial start-up and pre-functional procedures that were not completed successfully, at the bottom of the Pre-functional Checklist form or on an attached sheet.
6. The installing Subs or vendors shall correct all areas that are deficient or incomplete in the checklists and tests in a timely manner, and shall notify the CxA as soon as outstanding items have been corrected and resubmit an updated start-up report and a Statement of Correction on the original non-compliance report.
7. Items left incomplete, which later cause deficiencies or delays during functional testing may result in back charges to the responsible party. Refer to Part 3.6 herein for details.

3.16 FUNCTIONAL PERFORMANCE TESTING

A. This sub-section applies to all commissioning functional testing for all divisions.

B. The general list of equipment to be commissioned is found in Section 019100, Part 1.3.

C. Coordination and Scheduling. The Subs shall provide sufficient notice to the CxA regarding their completion schedule for the equipment checklists and startup of all equipment and systems. The CxA will schedule functional tests through the GC and affected Subs. The CxA shall direct, witness and document the functional testing of all equipment and systems. The Subs shall execute the tests.

1. Functional testing is conducted after equipment testing and startup has been satisfactorily completed.
2. Functional testing is intended to occur one (1) week after completed Pre-functional Checklists are submitted to the CxA.
3. The air balancing and water balancing must be completed, and the Test & Balance report reviewed and approved by the engineer prior to any HVAC functional testing by the CxA.
4. Testing proceeds from components to subsystems to systems. When the proper performance of all interacting individual systems has been achieved, the interface or coordinated responses between systems is checked.

D. Execution of Functional Testing. The CxA shall direct, witness, and document Functional Testing. Each system should be operated through all modes of operation (seasonal, occupied, unoccupied, warm-up, cool-down, part- and full-load) where there is a specified system response. Verifying each

sequence in the sequences of operation is required. Sample methods may be permitted as described in the Commissioning Plan.

E. Deficiency Resolution: The CxA will document and recommend solutions to issues discovered during equipment installation and functional testing, however the burden of responsibility to solve, correct and demonstrate resolution of identified issues is with the GC, Subs and A/E.

3.17 DOCUMENTATION, NON-CONFORMANCE AND APPROVAL OF TESTS

A. **Documentation.** The CxA shall witness and document the results of all functional performance tests using the specific procedural forms developed for that purpose. Prior to testing, these forms are provided to the GC for review and approval and to the Subs for review. The CxA will include the filled out forms in the O&M manuals.

B. Non-Conformance.

1. The CxA will record the results of the functional test on the procedure or test form. All deficiencies or non-conformance issues shall be noted and reported to the GC on a standard non-compliance form. This form will be labeled the "Issues/Resolutions Log" or I/R Log.
2. Corrections of minor deficiencies identified may be made during the tests at the discretion of the CxA. In such cases the deficiency and resolution will be documented on the procedure form.
3. Every effort will be made to expedite the testing process and minimize unnecessary delays, while not compromising the integrity of the procedures. However, the CxA will not be pressured into overlooking deficient work or loosening acceptance criteria to satisfy scheduling or cost issues, unless there is an overriding reason to do so at the request of the OR.
4. As tests progress and a deficiency is identified, the CxA discusses the issue with the executing contractor.
   a. When there is no dispute on the deficiency and the Sub accepts responsibility to correct it:
      1) The CxA documents the deficiency and the Sub's response and intentions and they go on to another test or sequence. After the day's work, the CxA submits the non-compliance reports to the GC for signature, if required. A copy is provided to the Sub, OR & A/E. The Sub corrects the deficiency, signs the statement of correction at the bottom of the non-compliance form certifying that the equipment is ready to be retested and sends it back to the CxA.
      2) The CxA reschedules the test and the test is repeated.
   b. If there is a dispute about a deficiency, regarding whether it is a deficiency or who is responsible:
      1) The deficiency shall be documented on the non-compliance form with the Sub's response and a copy given to the GC and to the Sub representative assumed to be responsible. The OR and A/E will also be copied.
      2) Resolutions are made at the lowest management level possible. Other parties are brought into the discussions as needed. Final interpretive authority is with the A/E. Final acceptance authority is with the Project Manager.
      3) The CxA documents the resolution process.
      4) Once the interpretation and resolution have been decided, the appropriate party corrects the deficiency, signs the statement of correction on the non-compliance form and provides it to the CxA. The CxA reschedules the test and the test is repeated until satisfactory performance is achieved.
5. Cost of Retesting.
   a. The cost for the *Sub* to retest a pre-functional or functional test, if they are responsible for the deficiency, shall be theirs. If they are not responsible, any cost recovery for retesting costs shall be negotiated with the general contractor.

b. For a deficiency identified, not related to any pre-functional checklist or start-up fault, the following shall apply: The CxA will direct the retesting of the equipment once at no "charge" to the contractor for their time. However, the CxA's and contractor's time for a second retest will be charged to the GC, who may choose to recover costs from the responsible Sub.

c. The time for the CxA to direct any retesting required because a specific *pre-functional* checklist or start-up test item, reported to have been successfully completed, but determined during functional testing to be faulty, will be back charged to the GC, who may choose to recover costs from the party responsible for executing the faulty pre-functional test.

6. The Contractor shall respond in writing to the CxA and GC at least as often as commissioning meetings are being scheduled concerning the status of each apparent outstanding discrepancy identified during commissioning. Discussion shall cover explanations of any disagreements and proposals for their resolution.

7. Any required retesting by any contractor shall not be considered a justified reason for a claim of delay or for a time extension by the prime contractor.

C. **Failure Due to Manufacturer Defect.** If 10%, or three, whichever is greater, of identical pieces (size alone does not constitute a difference) of equipment fail to perform to the Contract Documents (mechanically or substantively) due to manufacturing defect, not allowing it to meet its submitted performance spec, all identical units may be considered unacceptable. In such case, the Contractor and/or manufacturer shall replace or repair all identical items, at their expense and extend the warranty accordingly, if the original equipment warranty had begun. The replacement/repair work shall proceed with reasonable speed beginning within one week from when parts can be obtained

D. **Successful Functional Testing.** The CxA notes each satisfactorily demonstrated function on the test form. Formal approval of the functional test is made later after review by the CxA, owner's representative, and by the GC, if necessary. The CxA recommends acceptance of each test to the OR as noted on the functional performance test form. The OR gives final approval on each test using the same form, providing a signed copy to the CxA and the Contractor.

3.18 TRAINING OF OWNER PERSONNEL

A. The general contractor shall be responsible for training coordination and scheduling and ultimately for ensuring that training is completed.

B. The CxA shall be responsible for reviewing and approving the content and adequacy of the training of Owner personnel for commissioned equipment.

1. Each Sub and vendor responsible for training will submit a written training agenda to the CxA for review and approval prior to training. The agenda will cover the following elements:
   a. Equipment (included in training)
   b. Intended audience
   c. Location of training
   d. Objectives
   e. Subjects covered (description, duration of discussion, special methods, etc.)
      1) Equipment Description
      2) O&M Manual Review
      3) Safety and Emergency Shutoff
      4) Disable/Enable, General Sequence of Operation, and Typical Operation
      5) Current Setpoint and Operating Parameters
      6) Demonstration of Alarms and Safeties
      7) Troubleshooting and Diagnostics
      8) General Maintenance Procedures

f. Duration of training on each subject
g. Methods (classroom lecture, video, site walk-through, actual operational demonstrations, written handouts, etc.)
h. Instructor and qualifications and contact information.
i. For the primary HVAC equipment, the Controls Contractor shall provide a short discussion of the control of the equipment during the mechanical or electrical training conducted by others.

3.19 WRITTEN WORK PRODUCTS

A. The commissioning process generates a number of written work products described in various parts of the *Specifications.* The *Commissioning Plan* lists all the formal written work products, describes briefly their contents, who is responsible to create them, their due dates, who receives and approves them and the location of the specification to create them. In summary, the written products are:

Product	Developed By
1. Final Commissioning Plan	CxA
2. Cx Meeting Minutes	CxA
3. Commissioning Schedules	CxA with GC
4. Sequence clarifications	Subs and A/E as needed
5. Pre-functional Checklists	CxA (completed by installing contractors and verified complete by the general contractor)
6. Equipment Startup and Checkout	Subs
7. Test and Balance report	TAB
8. Issues/Resolutions Log (deficiencies)	CxA (responses required by Subs and GC)
9. Functional Test Forms	CxA (executed by Subs; documented by CxA)
10. O&M Manuals	Subs
11. O&M Training Agendas	Subs
12. Final Commissioning Report	CxA

END OF SECTION 019100

SECTION 024119 - SELECTIVE DEMOLITION

PART 1 - GENERAL

1.1 RELATED DOCUMENTS

A. Drawings and general provisions of the Contract, including General and Supplementary Conditions and Division 01 Specification Sections, apply to this Section.

1.2 SUMMARY

A. Section Includes:

1. Demolition and removal of selected portions of building or structure.
2. Demolition and removal of selected site elements.
3. Salvage of existing items to be reused or recycled.
4. Disconnecting, capping or sealing, and abandoning in-place or removing site utilities.
5. Selective cut-out work of existing building assemblies

B. Related Requirements:

1. Section 011000 "Summary" for restrictions on the use of the premises, Owner-occupancy requirements, and phasing requirements.
2. Division 01 Section "Photographic Documentation" for preconstruction photographs taken before selective demolition operations.
3. Section 015639 "Temporary Tree and Plant Protection" for temporary protection of existing trees and plants that are affected by selective demolition.
4. Section 311000 "Site Clearing" for site clearing and removal of above- and below-grade improvements.

1.3 DEFINITIONS

A. Remove: Detach items from existing construction and legally dispose of them off-site unless indicated to be removed and salvaged or removed and reinstalled.

B. Existing to Remain: Existing items of construction that are not to be permanently removed and that are not otherwise indicated to be removed, removed and salvaged, or removed and reinstalled.

C. Demolish: Completely remove and legally dispose of off-site.

1.4 MATERIALS OWNERSHIP

A. Unless otherwise indicated, demolition waste becomes property of Contractor.

1.5 PREINSTALLATION MEETINGS

A. Predemolition Conference: Conduct conference at Project site.

1. Inspect and discuss condition of construction to be selectively demolished.
2. Review structural load limitations of existing structure.
3. Review and finalize selective demolition schedule and verify availability of materials, demolition personnel, equipment, and facilities needed to make progress and avoid delays.
4. Review requirements of work performed by other trades that rely on substrates exposed by selective demolition operations.
5. Review areas where existing construction is to remain and requires protection.

1.6 INFORMATIONAL SUBMITTALS

A. Proposed Protection Measures: Submit report, including drawings, that indicates the measures proposed for protecting individuals and property [, for environmental protection] [, for dust control] [and] [, for noise control]. Indicate proposed locations and construction of barriers.

B. Schedule of Selective Demolition Activities: Indicate the following:

1. Detailed sequence of selective demolition and removal work, with starting and ending dates for each activity. Ensure Owner's on-site operations are uninterrupted.
2. Interruption of utility services. Indicate how long utility services will be interrupted.
3. Coordination for shutoff, capping, and continuation of utility services.
4. Use of elevator and stairs.
5. Locations of proposed dust- and noise-control, temporary partitions and means of egress for adjacent occupied areas affected by selective demolition operations.
6. Coordination of Owner's continuing occupancy of portions of existing building and of Owner's partial occupancy of completed Work.
7. Means of protection for items to remain and items in path of waste removal from building.

C. Inventory: Submit a list of items to be removed and salvaged and deliver to Owner prior to start of demolition.

D. Predemolition Photographs or Video: Show existing conditions of adjoining construction and site improvements, including finish surfaces, that might be misconstrued as damage caused by selective demolition operations. Comply with Division 01 Section "Photographic Documentation." Submit before Work begins.

E. Warranties: Documentation indicated that existing warranties are still in effect after completion of selective demolition.

1.7 CLOSEOUT SUBMITTALS

A. Inventory: Submit a list of items that have been removed and salvaged.

B. Landfill Records: Indicate receipt and acceptance of hazardous wastes by a landfill facility licensed to accept hazardous wastes.

1.8 QUALITY ASSURANCE

A. Refrigerant Recovery Technician Qualifications: Certified by an EPA-approved certification program.

1.9 FIELD CONDITIONS

A. Owner will occupy portions of building immediately adjacent to selective demolition area. Conduct selective demolition so Owner's operations will not be disrupted.

B. Owner assumes no responsibility for actual conditions of items or structures to be demolished. Conditions existing at time of inspection for bidding purpose will be maintained by Owner as far as practical.

C. Notify Architect of discrepancies between existing conditions and Drawings before proceeding with selective demolition.

D. Hazardous Materials: It is not expected that hazardous materials will be encountered in the Work.

1. Hazardous materials will be removed by Owner before start of the Work.
2. If suspected hazardous materials are encountered, do not disturb; immediately notify Architect and Owner. Hazardous materials will be removed by Owner under a separate contract.

E. Storage or sale of removed items or materials on-site is not permitted.

F. Utility Service: Maintain existing utilities indicated to remain in service and protect them against damage during selective demolition operations.

1. Maintain fire-protection facilities in service during selective demolition operations.

1.10 WARRANTY

A. Notify warrantor on completion of selective demolition, and obtain documentation verifying that existing system has been inspected and warranty remains in effect. Submit documentation at Project closeout.

PART 2 - PRODUCTS

2.1 PEFORMANCE REQUIREMENTS

A. Regulatory Requirements: Comply with governing EPA notification regulations before beginning selective demolition. Comply with hauling and disposal regulations of authorities having jurisdiction.

B. Standards: Comply with ANSI/ASSE A10.6 and NFPA 241.

PART 3 - EXECUTION

3.1 EXAMINATION

A. Verify that utilities have been disconnected and capped before starting selective demolition operations.

B. Review record documents of existing construction provided by Owner. Owner does not guarantee that existing conditions are same as those indicated in record documents.

C. Survey existing conditions and correlate with requirements indicated to determine extent of selective demolition required. Review Project Record Documents of existing construction provided by Owner. Owner does not guarantee that existing conditions are same as those indicated in Project Record Documents.

D. When unanticipated mechanical, electrical, or structural elements that conflict with intended function or design are encountered, investigate and measure the nature and extent of conflict. Promptly submit a written report to Architect.

E. Perform Engage a professional engineer to perform an engineering survey of condition of building to determine whether removing any element might result in structural deficiency or unplanned collapse of any portion of structure or adjacent structures during selective building demolition operations.

1. Perform surveys as the Work progresses to detect hazards resulting from selective demolition activities.

F. Survey of Existing Conditions: Record existing conditions by use of measured drawings preconstruction photographs preconstruction videotapes and templates.

1. Comply with requirements specified in Section 013233 "Photographic Documentation."
2. Inventory and record the condition of items to be removed and salvaged. Provide photographs of conditions that might be misconstrued as damage caused by salvage operations.
3. Before selective demolition or removal of existing building elements that will be reproduced or duplicated in final Work, make permanent record of measurements, materials, and construction details required to make exact reproduction.
4. If unanticipated mechanical, electrical, or structural elements that conflict with intended function or design are encountered, investigate and measure both nature and extent of the conflict. Submit report to Owner's Representative in written, accurate detail. Pending receipt of directive from Owner's Representative, rearrange selective demolition schedule as necessary to continue overall job progress without undue delay.

3.2 UTILITY SERVICES AND MECHANICAL/ELECTRICAL SYSTEMS

A. Existing Services/Systems to Remain: Maintain services/systems indicated to remain and protect them against damage.

1. Comply with requirements for existing services/systems interruptions specified in Section 011000 "Summary."

2. Do not interrupt existing utilities serving adjacent occupied or operating facilities unless authorized in writing by Owner and authorities having jurisdiction.
3. Provide temporary services during interruptions to existing utilities, as acceptable to Owner and authorities having jurisdiction.

    a. Provide at least 72 hours' notice to occupants of affected buildings if shutdown of service is required during changeover.

4. Maintain fire protection services during demolition operation.

B. Existing Services/Systems to Be Removed, Relocated, or Abandoned: Locate, identify, disconnect, and seal or cap off indicated utility services and mechanical/electrical systems serving areas to be selectively demolished. Refer to MEP specifications for shutting off, disconnecting, removing, and sealing or capping utilities. Do not start demolition work until utility disconnection and sealing have been completed.

1. Owner will arrange to shut off indicated services/systems when requested by Contractor.
2. If services/systems are required to be removed, relocated, or abandoned, provide temporary services/systems that bypass area of selective demolition and that maintain continuity of services/systems to other parts of building.
3. Disconnect, demolish, and remove fire-suppression systems, plumbing, and HVAC systems, equipment, and components indicated to be removed.

    a. Piping to Be Removed: Remove portion of piping indicated to be removed and cap or plug remaining piping with same or compatible piping material.
    b. Piping to Be Abandoned in Place: Drain piping and cap or plug piping with same or compatible piping material.
    c. Equipment to Be Removed: Disconnect and cap services and remove equipment.
    d. Equipment to Be Removed and Reinstalled: Disconnect and cap services and remove, clean, and store equipment; when appropriate, reinstall, reconnect, and make equipment operational.
    e. Equipment to Be Removed and Salvaged: Disconnect and cap services and remove equipment and deliver to Owner.
    f. Ducts to Be Removed: Remove portion of ducts indicated to be removed and plug remaining ducts with same or compatible ductwork material.
    g. Ducts to Be Abandoned in Place: Cap or plug ducts with same or compatible ductwork material.

C. Refrigerant: Remove refrigerant from mechanical equipment to be selectively demolished according to 40 CFR 82 and regulations of authorities having jurisdiction.

3.3 PREPARATION

A. Site Access and Temporary Controls: Conduct selective demolition and debris-removal operations to ensure minimum interference with roads, streets, walks, walkways, and other adjacent occupied and used facilities.

1. Comply with requirements for access and protection specified in Section 015000 "Temporary Facilities and Controls."

B. Temporary Facilities: Provide temporary barricades and other protection required to prevent injury to people and damage to adjacent buildings and facilities to remain.

1. Provide protection to ensure safe passage of people around selective demolition area and to and from occupied portions of building.
2. Provide temporary weather protection, during interval between selective demolition of existing construction on exterior surfaces and new construction, to prevent water leakage and damage to structure and interior areas.
3. Protect walls, ceilings, floors, and other existing finish work that are to remain or that are exposed during selective demolition operations.
4. Cover and protect furniture, furnishings, and equipment that have not been removed.
5. Erect and maintain dust-proof partitions and closures as required to prevent spread of dust or fumes to occupied portions of buildings.
6. Comply with requirements for temporary enclosures, dust control, heating, and cooling specified in Section 015000 "Temporary Facilities and Controls."

C. Temporary Shoring: Provide and maintain shoring, bracing, and structural supports as required to preserve stability and prevent movement, settlement, or collapse of construction and finishes to remain, and to prevent unexpected or uncontrolled movement or collapse of construction being demolished.

1. Strengthen or add new supports when required during progress of selective demolition.

D. Temporary Protection: Erect temporary protection, such as walks, fences, railings, canopies, and covered passageways, where required by authorities having jurisdiction and as indicated. Comply with requirements in Division 01 Section "Temporary Facilities and Controls."

1. Protect adjacent buildings and facilities from damage due to demolition activities.
2. Protect walls, windows, roofs, and other adjacent exterior construction that are to remain and that are exposed to building demolition operations.
3. Erect and maintain dustproof partitions and temporary enclosures to limit dust, noise, and dirt migration to occupied portions of adjacent buildings.

E. Remove temporary barriers and protections where hazards no longer exist. Where open excavations or other hazardous conditions remain, leave temporary barriers and protections in place.

3.4 SELECTIVE DEMOLITION, GENERAL

A. General: Demolish and remove existing construction only to the extent required by new construction and as indicated. Use methods required to complete the Work within limitations of governing regulations and as follows:

1. Proceed with selective demolition systematically, from higher to lower level. Complete selective demolition operations above each floor or tier before disturbing supporting members on the next lower level.
2. Neatly cut openings and holes plumb, square, and true to dimensions required. Use cutting methods least likely to damage construction to remain or adjoining construction. Use hand tools or small power tools designed for sawing or grinding, not hammering and chopping, to minimize disturbance of adjacent surfaces. Temporarily cover openings to remain.

3. Cut or drill from the exposed or finished side into concealed surfaces to avoid marring existing finished surfaces.
4. Do not use cutting torches until work area is cleared of flammable materials. At concealed spaces, such as duct and pipe interiors, verify condition and contents of hidden space before starting flame-cutting operations. Maintain[fire watch and] portable fire-suppression devices during flame-cutting operations.
5. Maintain adequate ventilation when using cutting torches.
6. Remove decayed, vermin-infested, or otherwise dangerous or unsuitable materials and promptly dispose of off-site.
7. Remove structural framing members and lower to ground by method suitable to avoid free fall and to prevent ground impact or dust generation.
8. Locate selective demolition equipment and remove debris and materials so as not to impose excessive loads on supporting walls, floors, or framing.
9. Dispose of demolished items and materials promptly. Comply with requirements in Section 017419 "Construction Waste Management and Disposal."
10. Use water mist and other suitable methods to limit spread of dust and dirt. Comply with governing environmental-protection regulations. Do not use water when it may damage adjacent construction or create hazardous or objectionable conditions, such as ice, flooding, and pollution.

B. Existing Items to Remain: Protect construction indicated to remain against damage and soiling during selective demolition. When permitted by Architect, items may be removed to a suitable, protected storage location during selective demolition and cleaned and reinstalled in their original locations after selective demolition operations are complete.

C. Damage: Promptly repair damages caused to adjacent facilities by demolition work.

3.5 SELECTIVE DEMOLITION PROCEDURES FOR SPECIFIC MATERIALS

A. Concrete: Demolish in small sections. Using power-driven saw, cut concrete to a depth of at least 3/4 inch at junctures with construction to remain. Dislodge concrete from reinforcement at perimeter of areas being demolished, cut reinforcement, and then remove remainder of concrete. Neatly trim openings to dimensions indicated.

B. Concrete: Demolish in sections. Cut concrete full depth at junctures with construction to remain and at regular intervals using power-driven saw, then remove concrete between saw cuts.

C. Masonry: Demolish in small sections. Cut masonry at junctures with construction to remain, using power-driven saw, then remove masonry between saw cuts.

D. Concrete Slabs-on-Grade: Saw-cut perimeter of area to be demolished, then break up and remove.

E. Resilient Floor Coverings: Remove floor coverings and adhesive according to recommendations in RFCI's "Recommended Work Practices for the Removal of Resilient Floor Coverings."[Do not use methods requiring solvent-based adhesive strippers.]

3.6 DISPOSAL OF DEMOLISHED MATERIALS

A. General: Except for items or materials indicated to be[recycled,] reused, salvaged, reinstalled, or otherwise indicated to remain Owner's property, remove demolished materials from Project site and legally dispose of them in an EPA-approved landfill.

1. Do not allow demolished materials to accumulate on-site.
2. Remove and transport debris in a manner that will prevent spillage on adjacent surfaces and areas.
3. Remove debris from elevated portions of building by chute, hoist, or other device that will convey debris to grade level in a controlled descent.
4. Comply with requirements specified in Section 017419 "Construction Waste Management and Disposal."

B. Burning: Burning of demolished materials will NOT be permitted.

C. Burning: Burning of demolished materials will be permitted[only at designated areas on Owner's property,] provided required permits are obtained. Provide full-time monitoring for burning materials until fires are extinguished.

D. Disposal: Transport demolished materials and dispose of at designated spoil areas on Owner's property.

3.7 CLEANING

A. General: Upon completion of demolition work, remove tools, equipment, and demolished materials from site. Remove protections and leave interior areas broom clean.

1. Repair demolition performed in excess of that required. Return elements of construction and surfaces to remain to condition existing prior to start operations. Repair adjacent construction or surfaces soiled or damaged by selective demolition work.

B. Where drawings indicate items to be removed or relocated or where work is indicated that may damage or leave holes or gaps in existing walls or finished surfaces, patch areas to match adjacent surface whether or not patching is specifically noted on drawings.

C. Promptly repair damage to adjacent buildings caused by demolition operations.

D. Clean adjacent structures and improvements of dust, dirt, and debris caused by selective demolition operations. Return adjacent areas to condition existing before selective demolition operations began.

E. Below-Grade Areas: Rough grade below-grade areas ready for further excavation or new construction.

1. Provide fill in voids of type as required by other Sections for new work.
2. Fill shall be free of trash and debris, stones over 6• diameter, roots or other organic material.

3.8 HANDLING OF ASBESTOS PRODUCTS

A. This contract does not include any removal, handling or disposal of asbestos and asbestos-containing products. Should asbestos be encountered during the work, suspend work, report asbestos findings to Architect immediately, and wait for further instructions.

B. If any other types of hazardous materials are encountered during the work, report finding to Architect immediately and wait for further instructions.

END OF SECTION 024119

SECTION 031000 - CONCRETE FORMING AND ACCESSORIES

PART 1 - GENERAL

1.1 RELATED DOCUMENTS

A. Drawings and general provisions of the Contract, including General and Supplementary Conditions and Division 01 Specification Sections, apply to this Section.

1.2 SUMMARY

A. Section Includes:

1. Form-facing material for cast-in-place concrete.
2. Shoring, bracing, and anchoring.

B. Related Requirements:

1. Section 321313 "Concrete Paving" for formwork related to concrete pavement and walks.

1.3 DEFINITIONS

A. Form-Facing Material: Temporary structure or mold for the support of concrete while the concrete is setting and gaining sufficient strength to be self-supporting.

B. Formwork: The total system of support of freshly placed concrete, including the mold or sheathing that contacts the concrete, as well as supporting members, hardware, and necessary bracing.

1.4 ACTION SUBMITTALS

A. Product Data: For each of the following:

1. Exposed surface form-facing material.
2. Concealed surface form-facing material.
3. Void forms.
4. Form ties.
5. Waterstops.
6. Form-release agent.

1.5 INFORMATIONAL SUBMITTALS

A. Qualification Data: For testing and inspection agency.

B. Field quality-control reports.

1.6 QUALITY ASSURANCE

A. Testing and Inspection Agency Qualifications: An independent agency, qualified in accordance with ASTM C1077 and ASTM E329 for testing indicated.

1.7 DELIVERY, STORAGE, AND HANDLING

A. Form Liners: Store form liners under cover to protect from sunlight.

B. Waterstops: Store waterstops under cover to protect from moisture, sunlight, dirt, oil, and other contaminants.

PART 2 - PRODUCTS

2.1 PERFORMANCE REQUIREMENTS

A. Concrete Formwork: Design, engineer, erect, shore, brace, and maintain formwork, and shores in accordance with ACI 301 (ACI 301M), to support vertical, lateral, static, and dynamic loads, and construction loads that might be applied, until structure can support such loads, so that resulting concrete conforms to the required shapes, lines, and dimensions.

1. Design wood panel forms in accordance with APA's "Concrete Forming Design/Construction Guide."

2. Design formwork to limit deflection of form-facing material to 1/240 of center-to-center spacing of supports.

a. For architectural concrete specified in Section 033300 "Architectural Concrete," limit deflection of form-facing material, studs, and walers to 0.0025 times their respective clear spans (L/400).

2.2 FORM-FACING MATERIALS

A. As-Cast Surface Form-Facing Material:

1. Provide continuous, true, and smooth concrete surfaces.
2. Furnish in largest practicable sizes to minimize number of joints.
3. Acceptable Materials: As required to comply with Surface Finish designations specified in Section 033000 "Cast-In-Place Concrete, and as follows:

a. Plywood, metal, or other approved panel materials.

b. Exterior-grade plywood panels, suitable for concrete forms, complying with DOC PS 1, and as follows:

1) APA HDO (high-density overlay).
2) APA MDO (medium-density overlay); mill-release agent treated and edge sealed.
3) APA Structural 1 Plyform, B-B or better; mill oiled and edge sealed.
4) APA Plyform Class I, B-B or better; mill oiled and edge sealed.

B. Concealed Surface Form-Facing Material: Lumber, plywood, metal, plastic, or another approved material.

1. Provide lumber dressed on at least two edges and one side for tight fit.

C. Void Forms: Biodegradable paper surface, treated for moisture resistance, structurally sufficient to support weight of plastic concrete and other superimposed loads.

D. Flexible Rubber Waterstops: U.S. Army Corps of Engineers CRD-C 513, for embedding in concrete to prevent passage of fluids through joints. Factory fabricate corners, intersections, and directional changes.

1. Profile: Flat dumbbell with center bulb
2. Dimensions: 4 inches by 3/16 inch thick (100 mm by 4.8 mm thick); nontapered.

E. Flexible PVC Waterstops: U.S. Army Corps of Engineers CRD-C 572, for embedding in concrete to prevent passage of fluids through joints. Factory fabricate corners, intersections, and directional changes.

1. Profile: Flat dumbbell with center bulb
2. Dimensions: 4 inches by 3/16 inch thick (100 mm by 4.8 mm thick); nontapered.

F. Self-Expanding Butyl Strip Waterstops: Manufactured rectangular or trapezoidal strip, butyl rubber with sodium bentonite or other hydrophilic polymers, for adhesive bonding to concrete, 3/4 by 1 inch (19 by 25 mm).

G. Self-Expanding Rubber Strip Waterstops: Manufactured rectangular or trapezoidal strip, bentonite-free hydrophilic polymer-modified chloroprene rubber, for adhesive bonding to concrete, 3/8 by 3/4 inch (10 by 19 mm).

2.3 RELATED MATERIALS

A. Reglets: Fabricate reglets of not less than 0.022-inch- (0.55-mm-) thick, galvanized-steel sheet. Temporarily fill or cover face opening of reglet to prevent intrusion of concrete or debris.

B. Dovetail Anchor Slots: Hot-dip galvanized-steel sheet, not less than 0.034 inch (0.85 mm) thick, with bent tab anchors. Temporarily fill or cover face opening of slots to prevent intrusion of concrete or debris.

C. Chamfer Strips: Wood, metal, PVC, or rubber strips, 3/4 by 3/4 inch (19 by 19 mm), minimum.

D. Rustication Strips: Wood, metal, PVC, or rubber strips, kerfed for ease of form removal.

E. Form-Release Agent: Commercially formulated form-release agent that does not bond with, stain, or adversely affect concrete surfaces and does not impair subsequent treatments of concrete surfaces.

1. Formulate form-release agent with rust inhibitor for steel form-facing materials.
2. Form release agent for form liners shall be acceptable to form liner manufacturer.

F. Form Ties: Factory-fabricated, removable or snap-off, glass-fiber-reinforced plastic or metal form ties designed to resist lateral pressure of fresh concrete on forms and to prevent spalling of concrete on removal.

1. Furnish units that leave no corrodible metal closer than 1 inch (25 mm) to the plane of exposed concrete surface.
2. Furnish ties that, when removed, leave holes no larger than 1 inch (25 mm) in diameter in concrete surface.
3. Furnish ties with integral water-barrier plates to walls indicated to receive dampproofing or waterproofing.

PART 3 - EXECUTION

3.1 INSTALLATION OF FORMWORK

A. Comply with ACI 301 (ACI 301M).

B. Construct formwork, so concrete members and structures are of size, shape, alignment, elevation, and position indicated, within tolerance limits of ACI 117 (ACI 117M) and to comply with the Surface Finish designations specified in Section 033000 "Cast-In-Place Concrete" for as-cast finishes

C. Limit concrete surface irregularities as follows:

1. Surface Finish-1.0: ACI 117 Class D, 1 inch (25 mm).
2. Surface Finish-2.0: ACI 117 Class B, 1/4 inch (6 mm).
3. Surface Finish-3.0: ACI 117 Class A, 1/8 inch (3.0 mm).

D. Construct forms tight enough to prevent loss of concrete mortar.

1. Minimize joints.
2. Exposed Concrete: Symmetrically align joints in forms.

E. Construct removable forms for easy removal without hammering or prying against concrete surfaces.

1. Provide crush or wrecking plates where stripping may damage cast-concrete surfaces.
2. Provide top forms for inclined surfaces steeper than 1.5 horizontal to 1 vertical.
3. Install keyways, reglets, recesses, and other accessories, for easy removal.

F. Do not use rust-stained, steel, form-facing material.

G. Set edge forms, bulkheads, and intermediate screed strips for slabs to achieve required elevations and slopes in finished concrete surfaces.

1. Provide and secure units to support screed strips
2. Use strike-off templates or compacting-type screeds.

H. Provide temporary openings for cleanouts and inspection ports where interior area of formwork is inaccessible.

1. Close openings with panels tightly fitted to forms and securely braced to prevent loss of concrete mortar.
2. Locate temporary openings in forms at inconspicuous locations.

I. Chamfer exterior corners and edges of permanently exposed concrete.

J. At construction joints, overlap forms onto previously placed concrete not less than 12 inches (305 mm).

K. Form openings, chases, offsets, sinkages, keyways, reglets, blocking, screeds, and bulkheads required in the Work.

1. Determine sizes and locations from trades providing such items.

2. Obtain written approval of Architect prior to forming openings not indicated on Drawings.

L. Construction and Movement Joints:

1. Construct joints true to line with faces perpendicular to surface plane of concrete.
2. Install so strength and appearance of concrete are not impaired, at locations indicated or as approved by Architect.
3. Place joints perpendicular to main reinforcement.

4. Locate joints for beams, slabs, joists, and girders in the middle third of spans.

a. Offset joints in girders a minimum distance of twice the beam width from a beam-girder intersection.

5. Locate horizontal joints in walls and columns at underside of floors, slabs, beams, and girders and at the top of footings or floor slabs.

6. Space vertical joints in walls as indicated on Drawings

a. Locate joints beside piers integral with walls, near corners, and in concealed locations where possible.

M. Provide temporary ports or openings in formwork where required to facilitate cleaning and inspection.

1. Locate ports and openings in bottom of vertical forms, in inconspicuous location, to allow flushing water to drain.
2. Close temporary ports and openings with tight-fitting panels, flush with inside face of form, and neatly fitted, so joints will not be apparent in exposed concrete surfaces.

N. Clean forms and adjacent surfaces to receive concrete. Remove chips, wood, sawdust, dirt, and other debris just before placing concrete.

O. Retighten forms and bracing before placing concrete, as required, to prevent mortar leaks and maintain proper alignment.

P. Coat contact surfaces of forms with form-release agent, according to manufacturer's written instructions, before placing reinforcement.

3.2 INSTALLATION OF EMBEDDED ITEMS

A. Place and secure anchorage devices and other embedded items required for adjoining work that is attached to or supported by cast-in-place concrete.

1. Use setting drawings, templates, diagrams, instructions, and directions furnished with items to be embedded.
2. Install anchor rods, accurately located, to elevations required and complying with tolerances in Section 7.5 of AISC 303.
3. Install reglets to receive waterproofing and to receive through-wall flashings in outer face of concrete frame at exterior walls, where flashing is shown at lintels, shelf angles, and other conditions.
4. Install dovetail anchor slots in concrete structures, as indicated on Drawings.

5. Clean embedded items immediately prior to concrete placement.

3.3 INSTALLATION OF WATERSTOPS

A. Flexible Waterstops: Install in construction joints and at other joints indicated to form a continuous diaphragm.

1. Install in longest lengths practicable.
2. Locate waterstops in center of joint unless otherwise indicated on Drawings.
3. Allow clearance between waterstop and reinforcing steel of not less than 2 times the largest concrete aggregate size specified in Section 033000 "Cast-In-Place Concrete."
4. Secure waterstops in correct position at 12 inches (305 mm) on center.
5. Field fabricate joints in accordance with manufacturer's instructions using heat welding.

a. Miter corners, intersections, and directional changes in waterstops.
b. Align center bulbs.

6. Clean waterstops immediately prior to placement of concrete.
7. Support and protect exposed waterstops during progress of the Work.

B. Self-Expanding Strip Waterstops: Install in construction joints and at other locations indicated on Drawings, according to manufacturer's written instructions, by adhesive bonding, mechanically fastening, and firmly pressing into place.

1. Install in longest lengths practicable.
2. Locate waterstops in center of joint unless otherwise indicated on Drawings.
3. Protect exposed waterstops during progress of the Work.

3.4 REMOVING AND REUSING FORMS

A. Formwork for sides of beams, walls, columns, and similar parts of the Work that does not support weight of concrete may be removed after cumulatively curing at not less than 50 deg F (10 deg C) for 24 hours after placing concrete. Concrete has to be hard enough to not be damaged by form-removal operations, and curing and protection operations need to be maintained.

1. Leave formwork for beam soffits, joists, slabs, and other structural elements that support weight of concrete in place until concrete has achieved at least 70 percent of its 28-day design compressive strength.
2. Remove forms only if shores have been arranged to permit removal of forms without loosening or disturbing shores.

B. Clean and repair surfaces of forms to be reused in the Work.

1. Split, frayed, delaminated, or otherwise damaged form-facing material are unacceptable for exposed surfaces.
2. Apply new form-release agent.

C. When forms are reused, clean surfaces, remove fins and laitance, and tighten to close joints.

1. Align and secure joints to avoid offsets.
2. Do not use patched forms for exposed concrete surfaces unless approved by Architect.

3.5 FIELD QUALITY CONTROL

A. Special Inspections: Owner will engage a special inspector and qualified testing and inspecting agency to perform field tests and inspections and prepare test reports.

B. Testing Agency: Engage a qualified testing and inspecting agency to perform tests and inspections and to submit reports.

C. Inspections:

1. Inspect formwork for shape, location, and dimensions of the concrete member being formed.

END OF SECTION 031000

SECTION 032000 - CONCRETE REINFORCING

1.1 RELATED DOCUMENTS

A. Drawings and general provisions of the Contract, including General and Supplementary Conditions and Division 01 Specification Sections, apply to this Section.

1.2 SUMMARY

A. Section Includes:

1. Steel reinforcement bars.
2. Welded-wire reinforcement.

B. Related Requirements:

1. Section 034100 "Precast Structural Concrete" for reinforcing used in precast structural concrete.
2. Section 034500 "Precast Architectural Concrete" for reinforcing used in precast architectural concrete.
3. Section 321313 "Concrete Paving" for reinforcing related to concrete pavement and walks.

1.3 ACTION SUBMITTALS

A. Product Data: For the following:

1. Each type of steel reinforcement.
2. Bar supports.
3. Mechanical splice couplers.

B. Shop Drawings: Comply with ACI SP-066:

1. Include placing drawings that detail fabrication, bending, and placement.
2. Include bar sizes, lengths, materials, grades, bar schedules, stirrup spacing, bent bar diagrams, bar arrangement, location of splices, lengths of lap splices, details of mechanical splice couplers, details of welding splices, tie spacing, hoop spacing, and supports for concrete reinforcement.

1.4 QUALITY ASSURANCE

A. Testing Agency Qualifications: An independent agency qualified in accordance with ASTM C1077 and ASTM E329 for testing indicated.

B. Welding Qualifications: Qualify procedures and personnel in accordance with AWS D1.4/D 1.4M.

1.5 DELIVERY, STORAGE, AND HANDLING

A. Steel Reinforcement: Deliver, store, and handle steel reinforcement to prevent bending and damage.

1. Store reinforcement to avoid contact with earth.

PART 2 - PRODUCTS

2.1 STEEL REINFORCEMENT

A. Reinforcing Bars: ASTM A615/A615M, Grade 60 (Grade 420), deformed.

B. Low-Alloy Steel Reinforcing Bars: ASTM A706/A706M, deformed.

C. Headed-Steel Reinforcing Bars: ASTM A970/A970M.

D. Plain-Steel Welded-Wire Reinforcement: ASTM A1064/A1064M, plain, fabricated from as-drawn steel wire into flat sheets.

2.2 REINFORCEMENT ACCESSORIES

A. Joint Dowel Bars: ASTM A615/A615M, Grade 60 (Grade 420), plain-steel bars, cut true to length with ends square and free of burrs.

B. Bar Supports: Bolsters, chairs, spacers, and other devices for spacing, supporting, and fastening reinforcing bars and welded-wire reinforcement in place.

1. Manufacture bar supports from steel wire, plastic, or precast concrete in accordance with CRSI's "Manual of Standard Practice," of greater compressive strength than concrete and as follows:

a. For concrete surfaces exposed to view, where legs of wire bar supports contact forms, use CRSI Class 1 plastic-protected steel wire, all-plastic bar supports, or CRSI Class 2 stainless steel bar supports.

C. Mechanical Splice Couplers: ACI 318 (ACI 318M), same material of reinforcing bar being spliced.

D. Tie Wire: ASTM A1064/A1064M, annealed steel, not less than 0.0508 inch (1.2908 mm) in diameter.

1. Finish: Plain

2.3 FABRICATING REINFORCEMENT

A. Fabricate steel reinforcement according to CRSI's "Manual of Standard Practice."

PART 3 - EXECUTION

3.1 PREPARATION

A. Protection of In-Place Conditions:

1. Do not cut or puncture vapor retarder.
2. Repair damage and reseal vapor retarder before placing concrete.

B. Clean reinforcement of loose rust and mill scale, earth, ice, and other foreign materials that reduce bond to concrete.

3.2 INSTALLATION OF STEEL REINFORCEMENT

A. Comply with CRSI's "Manual of Standard Practice" for placing and supporting reinforcement.

B. Accurately position, support, and secure reinforcement against displacement.

1. Locate and support reinforcement with bar supports to maintain minimum concrete cover.
2. Do not tack weld crossing reinforcing bars.

C. Preserve clearance between bars of not less than 1 inch (25 mm), not less than one bar diameter, or not less than 1-1/3 times size of large aggregate, whichever is greater.

D. Provide concrete coverage in accordance with ACI 318 (ACI 318M).

E. Set wire ties with ends directed into concrete, not toward exposed concrete surfaces.

F. Splices: Lap splices as indicated on Drawings.

G. Install welded-wire reinforcement in longest practicable lengths.

1. Support welded-wire reinforcement in accordance with CRSI "Manual of Standard Practice."

a. For reinforcement less than W4.0 or D4.0, continuous support spacing shall not exceed 12 inches (305 mm).

2. Lap edges and ends of adjoining sheets at least one mesh spacing plus 2 inches (50 mm) for plain wire and 8 inches (200 mm) for deformed wire.
3. Offset laps of adjoining sheet widths to prevent continuous laps in either direction.
4. Lace overlaps with wire.

3.3 JOINTS

A. Construction Joints: Install so strength and appearance of concrete are not impaired, at locations indicated or as approved by Architect.

1. Place joints perpendicular to main reinforcement.
2. Continue reinforcement across construction joints unless otherwise indicated.
3. Do not continue reinforcement through sides of strip placements of floors and slabs.

B. Doweled Joints: Install dowel bars and support assemblies at joints where indicated. Lubricate or asphalt coat one-half of dowel length, to prevent concrete bonding to one side of joint.

3.4 INSTALLATION TOLERANCES

A. Comply with ACI 117 (ACI 117M).

3.5 FIELD QUALITY CONTROL

A. Special Inspections: Owner will engage a special inspector to perform field tests and inspections and prepare test reports.

B. Testing Agency: Engage a qualified testing and inspecting agency to perform tests and inspections and to submit reports.

C. Inspections:

1. Steel-reinforcement placement.
2. Steel-reinforcement mechanical splice couplers.
3. Steel-reinforcement welding.

END OF SECTION 032000

SECTION 033000 - CAST-IN-PLACE CONCRETE

1.1 RELATED DOCUMENTS

A. Drawings and general provisions of the Contract, including General and Supplementary Conditions and Division 01 Specification Sections, apply to this Section.

1.2 SUMMARY

A. Section Includes:

1. Cast-in-place concrete, including concrete materials, mixture design, placement procedures, and finishes.

B. Related Requirements:

1. Section 031000 "Concrete Forming and Accessories" for form-facing materials, form liners, insulating concrete forms, and waterstops.
2. Section 032000 "Concrete Reinforcing" for steel reinforcing bars and welded-wire reinforcement.
3. Section 033300 "Architectural Concrete" for general building applications of specially finished formed concrete.
4. Section 033543 "Polished Concrete Finishing" for concrete floors scheduled to receive a polished concrete finish.
5. Section 312000 "Earth Moving" for drainage fill under slabs-on-ground.
6. Section 321313 "Concrete Paving" for concrete pavement and walks.
7. Section 321316 "Decorative Concrete Paving" for decorative concrete pavement and walks.

1.3 DEFINITIONS

A. Cementitious Materials: Portland cement alone or in combination with one or more of the following: blended hydraulic cement, fly ash, slag cement, other pozzolans, and silica fume; materials subject to compliance with requirements.

B. Water/Cement Ratio (w/cm): The ratio by weight of water to cementitious materials.

1.4 ACTION SUBMITTALS

A. Product Data: For each of the following.

1. Portland cement.
2. Fly ash.
3. Aggregates.
4. Admixtures:

a. Include limitations of use, including restrictions on cementitious materials, supplementary cementitious materials, air entrainment, aggregates, temperature at time of concrete placement, relative humidity at time of concrete placement, curing conditions, and use of other admixtures.

5. Vapor retarders.
6. Floor and slab treatments.

7. Liquid floor treatments.
8. Curing materials.

    a. Include documentation from color pigment manufacturer, indicating that proposed methods of curing are recommended by color pigment manufacturer.

9. Joint fillers.
10. Repair materials.

B. Design Mixtures: For each concrete mixture, include the following:

1. Mixture identification.
2. Minimum 28-day compressive strength.
3. Durability exposure class.
4. Maximum w/cm.
5. Slump limit.
6. Air content.
7. Nominal maximum aggregate size.
8. Indicate amounts of mixing water to be withheld for later addition at Project site if permitted.
9. Intended placement method.
10. Submit alternate design mixtures when characteristics of materials, Project conditions, weather, test results, or other circumstances warrant adjustments.

C. Shop Drawings:

1. Construction Joint Layout: Indicate proposed construction joints required to construct the structure.

    a. Location of construction joints is subject to approval of the Architect.

D. Concrete Schedule: For each location of each Class of concrete indicated in "Concrete Mixtures" Article, including the following:

1. Concrete Class designation.
2. Location within Project.
3. Exposure Class designation.
4. Formed Surface Finish designation and final finish.
5. Final finish for floors.
6. Curing process.
7. Floor treatment if any.

1.5 INFORMATIONAL SUBMITTALS

A. Qualification Data: For the following:

1. Installer: Include copies of applicable ACI certificates.
2. Ready-mixed concrete manufacturer.
3. Testing agency: Include copies of applicable ACI certificates.

B. Material Certificates: For each of the following, signed by manufacturers:

1. Cementitious materials.
2. Admixtures.
3. Curing compounds.
4. Floor and slab treatments.
5. Bonding agents.
6. Adhesives.
7. Vapor retarders.
8. Semirigid joint filler.
9. Joint-filler strips.
10. Repair materials.

C. Material Test Reports: For the following, from a qualified testing agency:

1. Portland cement.
2. Fly ash.
3. Aggregates.
4. Admixtures.

D. Preconstruction Test Reports: For each mix design.

E. Field quality-control reports.

1.6 QUALITY ASSURANCE

A. Installer Qualifications: A qualified installer who employs Project personnel qualified as a ACI-certified Flatwork Technician and Finisher and a supervisor who is a certified ACI Flatwork Concrete Finisher/Technician or an ACI Concrete Flatwork Technician

1. Post-Installed Concrete Anchors Installers: ACI-certified Adhesive Anchor Installer.

B. Ready-Mixed Concrete Manufacturer Qualifications: A firm experienced in manufacturing ready-mixed concrete products and that complies with ASTM C94/C94M requirements for production facilities and equipment.

1. Manufacturer certified in accordance with NRMCA's "Certification of Ready Mixed Concrete Production Facilities."

C. Laboratory Testing Agency Qualifications: A testing agency qualified in accordance with ASTM C1077 and ASTM E329 for testing indicated, and employing an ACI-certified Concrete Quality Control Technical Manager.

1. Personnel performing laboratory tests shall be an ACI-certified Concrete Strength Testing Technician and Concrete Laboratory Testing Technician, Grade I. Testing agency laboratory supervisor shall be an ACI-certified Concrete Laboratory Testing Technician, Grade II.

D. Field Quality Control Testing Agency Qualifications: An independent agency, qualified in accordance with ASTM C1077 and ASTM E329 for testing indicated.

1. Personnel conducting field tests shall be qualified as an ACI Concrete Field Testing Technician, Grade 1, in accordance with ACI CPP 610.1 or an equivalent certification program.

1.7 DELIVERY, STORAGE, AND HANDLING

A. Comply with ASTM C94/C94M and ACI 301 (ACI 301M).

1.8 FIELD CONDITIONS

A. Cold-Weather Placement: Comply with ACI 301 (ACI 301M) and ACI 306.1 and as follows.

1. Protect concrete work from physical damage or reduced strength that could be caused by frost, freezing actions, or low temperatures.
2. When average high and low temperature is expected to fall below 40 deg F (4.4 deg C) for three successive days, maintain delivered concrete mixture temperature within the temperature range required by ACI 301 (ACI 301M).
3. Do not use frozen materials or materials containing ice or snow.
4. Do not place concrete in contact with surfaces less than 35 deg F (1.7 deg C), other than reinforcing steel.
5. Do not use calcium chloride, salt, or other materials containing antifreeze agents or chemical accelerators unless otherwise specified and approved in mixture designs.

B. Hot-Weather Placement: Comply with ACI 301 (ACI 301M) and ACI 305.1 (ACI 305.1M), and as follows:

1. Maintain concrete temperature at time of discharge to not exceed 95 deg F (35 deg C).
2. Fog-spray forms, steel reinforcement, and subgrade just before placing concrete. Keep subgrade uniformly moist without standing water, soft spots, or dry areas.

PART 2 - PRODUCTS

2.1 CONCRETE, GENERAL

A. ACI Publications: Comply with the following unless modified by requirements in the Contract Documents:

1. ACI 301 (ACI 301M).

2.2 CONCRETE MATERIALS

A. Source Limitations:

1. Obtain each type or class of cementitious material of the same brand from the same manufacturer's plant.
2. Obtain aggregate from single source.
3. Obtain each type of admixture from single source from single manufacturer.

B. Cementitious Materials:

1. Portland Cement: ASTM C150/C150M, Type I/II gray.
2. Fly Ash: ASTM C618, Class C or F.

C. Normal-Weight Aggregates: ASTM C33/C33M, Class 3S coarse aggregate or better, graded. Provide aggregates from a single source.

1. Alkali-Silica Reaction: Comply with one of the following:

a. Expansion Result of Aggregate: Not more than 0.04 percent at one-year when tested in accordance with ASTM C1293.
b. Expansion Results of Aggregate and Cementitious Materials in Combination: Not more than 0.10 percent at an age of 16 days when tested in accordance with ASTM C1567.
c. Alkali Content in Concrete: Not more than 4 lb./cu. yd. for moderately reactive aggregate or 3 lb./cu. yd. for highly reactive aggregate, when tested in accordance with ASTM C1293 and categorized in accordance with ASTM C1778, based on alkali content being calculated in accordance with ACI 301 (ACI 301M).

2. Maximum Coarse-Aggregate Size: 1-1/2 inches (38 mm) nominal.
3. Fine Aggregate: Free of materials with deleterious reactivity to alkali in cement.

D. Air-Entraining Admixture: ASTM C260/C260M.

E. Chemical Admixtures: Certified by manufacturer to be compatible with other admixtures that do not contribute water-soluble chloride ions exceeding those permitted in hardened concrete. Do not use calcium chloride or admixtures containing calcium chloride.

1. Water-Reducing Admixture: ASTM C494/C494M, Type A.
2. Retarding Admixture: ASTM C494/C494M, Type B.
3. Water-Reducing and -Retarding Admixture: ASTM C494/C494M, Type D.
4. High-Range, Water-Reducing Admixture: ASTM C494/C494M, Type F.
5. High-Range, Water-Reducing and -Retarding Admixture: ASTM C494/C494M, Type G.
6. Plasticizing and Retarding Admixture: ASTM C1017/C1017M, Type II.

F. Water and Water Used to Make Ice: ASTM C94/C94M, potable

2.3 VAPOR RETARDERS

A. Sheet Vapor Retarder, Class A: ASTM E1745, Class A; not less than 10 mils (0.25 mm) thick. Include manufacturer's recommended adhesive or pressure-sensitive tape.

2.4 LIQUID FLOOR TREATMENTS

A. Penetrating Liquid Floor Treatment: Clear, chemically reactive, waterborne solution of inorganic silicate or siliconate materials and proprietary components; odorless; that penetrates, hardens, and densifies concrete surfaces.

2.5 CURING MATERIALS

A. Evaporation Retarder: Waterborne, monomolecular film forming, manufactured for application to fresh concrete.

B. Absorptive Cover: AASHTO M 182, Class 2, burlap cloth made from jute or kenaf, weighing approximately 9 oz./sq. yd. (305 g/sq. m) when dry.

C. Moisture-Retaining Cover: ASTM C171, polyethylene film burlap-polyethylene sheet.

1. Color:

a. Ambient Temperature Below 50 deg F (10 deg C): Black.

b. Ambient Temperature between 50 deg F (10 deg C) and 85 deg F (29 deg C): Any color.
c. Ambient Temperature Above 85 deg F (29 deg C): White.

D. Curing Paper: Eight-feet- (2438-mm-) wide paper, consisting of two layers of fibered kraft paper laminated with double coating of asphalt.

E. Water: Potable or complying with ASTM C1602/C1602M.

F. Clear, Waterborne, Membrane-Forming, Dissipating Curing Compound: ASTM C309, Type 1, Class B.

G. Clear, Waterborne, Membrane-Forming, Nondissipating Curing Compound: ASTM C309, Type 1, Class B, certified by curing compound manufacturer to not interfere with bonding of floor covering.

H. Clear, Waterborne, Membrane-Forming, Curing Compound: ASTM C309, Type 1, Class B, 18 to 25 percent solids, nondissipating, certified by curing compound manufacturer to not interfere with bonding of floor covering.

I. Clear, Solvent-Borne, Membrane-Forming, Curing and Sealing Compound: ASTM C1315, Type 1, Class A.

J. Clear, Waterborne, Membrane-Forming, Curing and Sealing Compound: ASTM C1315, Type 1, Class A.

2.6 RELATED MATERIALS

A. Expansion- and Isolation-Joint-Filler Strips: ASTM D1751, asphalt-saturated cellulosic fiber or ASTM D1752, cork or self-expanding cork.

B. Semirigid Joint Filler: Two-component, semirigid, 100 percent solids, epoxy resin with a Type A shore durometer hardness of 80 in accordance with ASTM D2240.

C. Bonding Agent: ASTM C1059/C1059M, Type II, nonredispersible, acrylic emulsion or styrene butadiene.

D. Floor Slab Protective Covering: Eight-feet- (2438-mm-) wide cellulose fabric.

2.7 REPAIR MATERIALS

A. Repair Underlayment: Cement-based, polymer-modified, self-leveling product that can be applied in thicknesses from 1/8 inch (3 mm) and that can be feathered at edges to match adjacent floor elevations.

1. Cement Binder: ASTM C150/C150M portland cement or hydraulic or blended hydraulic cement, as defined in ASTM C219.
2. Primer: Product of underlayment manufacturer recommended for substrate, conditions, and application.
3. Aggregate: Well-graded, washed gravel, 1/8 to 1/4 inch (3 to 6 mm) or coarse sand, as recommended by underlayment manufacturer.
4. Compressive Strength: Not less than 4100 psi (29 MPa) at 28 days when tested in accordance with ASTM C109/C109M.

B. Repair Overlayment: Cement-based, polymer-modified, self-leveling product that can be applied in thicknesses from 1/4 inch (6 mm) and that can be filled in over a scarified surface to match adjacent floor elevations.

1. Cement Binder: ASTM C150/C150M portland cement or hydraulic or blended hydraulic cement, as defined in ASTM C219.
2. Primer: Product of topping manufacturer recommended for substrate, conditions, and application.
3. Aggregate: Well-graded, washed gravel, 1/8 to 1/4 inch (3.2 to 6 mm) or coarse sand as recommended by topping manufacturer.
4. Compressive Strength: Not less than 5000 psi (34.5 MPa) at 28 days when tested in accordance with ASTM C109/C109M.

2.8 CONCRETE MIXTURES, GENERAL

A. Prepare design mixtures for each type and strength of concrete, proportioned on the basis of laboratory trial mixture or field test data, or both, in accordance with ACI 301 (ACI 301M).

1. Use a qualified testing agency for preparing and reporting proposed mixture designs, based on laboratory trial mixtures.

B. Cementitious Materials: Limit percentage, by weight, of cementitious materials other than portland cement in concrete as follows:

1. Fly Ash or Other Pozzolans: 25 percent by mass.
2. Slag Cement: 50 percent by mass.
3. Total of Fly Ash or Other Pozzolans, and Slag Cement: 50 percent by mass, with fly ash or pozzolans not exceeding 25 percent by mass and silica fume not exceeding 10 percent by mass.
4. Total of Fly Ash or Other Pozzolans: 35 percent by mass with fly ash or pozzolans not exceeding 25 percent by mass and silica fume not exceeding 10 percent by mass.

C. Admixtures: Use admixtures in accordance with manufacturer's written instructions.

1. Use water-reducing high-range water-reducing or plasticizing admixture in concrete, as required, for placement and workability.
2. Use water-reducing and -retarding admixture when required by high temperatures, low humidity, or other adverse placement conditions.
3. Use water-reducing admixture in pumped concrete, concrete for heavy-use industrial slabs and parking structure slabs, and concrete with a w/cm below 0.50.
4. Use corrosion-inhibiting admixture in concrete mixtures where indicated.
5. Use permeability-reducing admixture in concrete mixtures where indicated.

D. Color Pigment: Add color pigment to concrete mixture in accordance with manufacturer's written instructions and to result in hardened concrete color consistent with approved mockup.

2.9 CONCRETE MIXTURES

A. Class A: Normal-weight concrete used for footings, grade beams, and foundation walls.

1. Exposure Class: ACI 318 (ACI 318M) F2 S1 C1.
2. Minimum Compressive Strength: 4500 psi (31 MPa) at 28 days.
3. Maximum w/cm: 0.45.

4. Slump Limit: 8 inches (200 mm), plus or minus 1 inch (25 mm) for concrete with verified slump of 2 to 4 inches (50 to 100 mm) before adding high-range water-reducing admixture or plasticizing admixture.
5. Air Content:

    a. Exposure Classes F2 and F3: 6 percent, plus or minus 1.5 percent at point of delivery for concrete containing 3/4-inch (19-mm) nominal maximum aggregate size; 6 percent, plus or minus 1.5 percent at point of delivery for concrete containing 1-inch (25-mm) nominal maximum aggregate size; 5.5 percent, plus or minus 1.5 percent at point of delivery for concrete containing 1-1/2-inch (38-mm) nominal maximum aggregate size.

6. Limit water-soluble, chloride-ion content in hardened concrete to 0.30 percent by weight of cement.

B. Class B: Normal-weight concrete used for interior slabs-on-ground.

1. Exposure Class: ACI 318 (ACI 318M).
2. Minimum Compressive Strength: 4000 psi (27.6 MPa) at 28 days.
3. Maximum w/cm: 0.45.
4. Slump Limit: 8 inches (200 mm), plus or minus 1 inch (25 mm) for concrete with verified slump of 2 to 4 inches (50 to 100 mm) before adding high-range water-reducing admixture or plasticizing admixture.
5. Air Content:

    a. Do not use an air-entraining admixture or allow total air content to exceed 3 percent for concrete used in trowel-finished floors.

6. Limit water-soluble, chloride-ion content in hardened concrete to 1.00 percent by weight of cement.

C. Class C: Normal-weight concrete used for interior concrete toppings on metal deck.

1. Exposure Class: ACI 318 (ACI 318M).
2. Minimum Compressive Strength: 4000 psi (27.6 MPa) at 28 days.
3. Slump Limit: 8 inches (200 mm), plus or minus 1 inch (25 mm) for concrete with verified slump of 2 to 4 inches (50 to 100 mm) before adding high-range water-reducing admixture or plasticizing admixture.
4. Air Content:

    a. Do not use an air-entraining admixture or allow total air content to exceed 3 percent for concrete used in trowel-finished floors.

5. Limit water-soluble, chloride-ion content in hardened concrete to 1.00 percent by weight of cement.

D. Class D: Normal-weight concrete used for interior building walls.

1. Exposure Class: ACI 318 (ACI 318M).
2. Minimum Compressive Strength: 4500 psi (31 MPa) at 28 days.
3. Maximum w/cm: 0.45.

4. Slump Limit: 8 inches (200 mm), plus or minus 1 inch (25 mm) for concrete with verified slump of 2 to 4 inches (50 to 100 mm) before adding high-range water-reducing admixture or plasticizing admixture.
5. Air Content:

    a. Do not use air entraining admixture, or allow total air content to exceed 3 percent.

6. Limit water-soluble, chloride-ion content in hardened concrete to 1.00 percent by weight of cement.

E. Class I: Normal-weight concrete used for interior metal pan stairs and landings:

1. Exposure Class: ACI 318 (ACI 318M).
2. Minimum Compressive Strength: 3000 psi (20.7 MPa) at 28 days.
3. Maximum w/cm: 0.53.
4. Minimum Cementitious Materials Content: 470 lb/cu. yd. (279 kg/cu. m).
5. Maximum Size Aggregate: 1/2 inch (13 mm).
6. Slump Limit: 3 inches (75 mm), plus 1 inch (25 mm) or minus 2 inches (50 mm).
7. Air Content: 0 percent, plus or minus 0.5 percent at point of delivery.
8. Limit water-soluble, chloride-ion content in hardened concrete to 1.00 percent by weight of cement.
9. Retarding Admixture: Not allowed.
10. Accelerating Admixture: Not allowed.

2.10 CONCRETE MIXING

A. Ready-Mixed Concrete: Measure, batch, mix, and deliver concrete in accordance with ASTM C94/C94M, and furnish batch ticket information.

B. Project-Site Mixing: Measure, batch, and mix concrete materials and concrete in accordance with ASTM C94/C94M. Mix concrete materials in appropriate drum-type batch machine mixer.

1. For mixer capacity of 1 cu. yd. (0.76 cu. m) or smaller, continue mixing at least 1-1/2 minutes, but not more than five minutes after ingredients are in mixer, before any part of batch is released.
2. For mixer capacity larger than 1 cu. yd. (0.76 cu. m), increase mixing time by 15 seconds for each additional 1 cu. yd. (0.76 cu. m).
3. Provide batch ticket for each batch discharged and used in the Work, indicating Project identification name and number, date, mixture type, mixture time, quantity, and amount of water added. Record approximate location of final deposit in structure.

PART 3 - EXECUTION

3.1 EXAMINATION

A. Verification of Conditions:

1. Before placing concrete, verify that installation of concrete forms, accessories, and reinforcement, and embedded items is complete and that required inspections have been performed.
2. Do not proceed until unsatisfactory conditions have been corrected.

3.2 INSTALLATION OF EMBEDDED ITEMS

A. Place and secure anchorage devices and other embedded items required for adjoining Work that is attached to or supported by cast-in-place concrete.

1. Use setting drawings, templates, diagrams, instructions, and directions furnished with items to be embedded.
2. Install anchor rods, accurately located, to elevations required and complying with tolerances in Section 7.5 of ANSI/AISC 303.
3. Install reglets to receive waterproofing and to receive through-wall flashings in outer face of concrete frame at exterior walls, where flashing is shown at lintels, shelf angles, and other conditions.

3.3 INSTALLATION OF VAPOR RETARDER

A. Sheet Vapor Retarders: Place, protect, and repair sheet vapor retarder in accordance with ASTM E1643 and manufacturer's written instructions.

1. Install vapor retarder with longest dimension parallel with direction of concrete pour.
2. Face laps away from exposed direction of concrete pour.
3. Lap vapor retarder over footings and grade beams not less than 6 inches (150 mm), sealing vapor retarder to concrete.
4. Lap joints 6 inches (150 mm) and seal with manufacturer's recommended tape.
5. Terminate vapor retarder at the top of floor slabs, grade beams, and pile caps, sealing entire perimeter to floor slabs, grade beams, foundation walls, or pile caps.
6. Seal penetrations in accordance with vapor retarder manufacturer's instructions.
7. Protect vapor retarder during placement of reinforcement and concrete.

a. Repair damaged areas by patching with vapor retarder material, overlapping damages area by 6 inches (150 mm) on all sides, and sealing to vapor retarder.

B. Bituminous Vapor Retarders: Place, protect, and repair bituminous vapor retarder in accordance with manufacturer's written instructions.

3.4 JOINTS

A. Construct joints true to line, with faces perpendicular to surface plane of concrete.

B. Construction Joints: Coordinate with floor slab pattern and concrete placement sequence.

1. Install so strength and appearance of concrete are not impaired, at locations indicated on Drawings or as approved by Architect.
2. Place joints perpendicular to main reinforcement.

a. Continue reinforcement across construction joints unless otherwise indicated.
b. Do not continue reinforcement through sides of strip placements of floors and slabs.

3. Form keyed joints as indicated. Embed keys at least 1-1/2 inches (38 mm) into concrete.
4. Locate joints for beams, slabs, joists, and girders at third points of spans. Offset joints in girders a minimum distance of twice the beam width from a beam-girder intersection.
5. Locate horizontal joints in walls and columns at underside of floors, slabs, beams, and girders and at the top of footings or floor slabs.

6. Space vertical joints in walls as indicated on Drawings. Unless otherwise indicated on Drawings, locate vertical joints beside piers integral with walls, near corners, and in concealed locations where possible.
7. Use a bonding agent at locations where fresh concrete is placed against hardened or partially hardened concrete surfaces.
8. Use epoxy-bonding adhesive at locations where fresh concrete is placed against hardened or partially hardened concrete surfaces.

C. Control Joints in Slabs-on-Ground: Form weakened-plane control joints, sectioning concrete into areas as indicated. Construct control joints for a depth equal to at least one-fourth of concrete thickness as follows:

1. Grooved Joints: Form control joints after initial floating by grooving and finishing each edge of joint to a radius of 1/8 inch (3.2 mm). Repeat grooving of control joints after applying surface finishes. Eliminate groover tool marks on concrete surfaces.
2. Sawed Joints: Form control joints with power saws equipped with shatterproof abrasive or diamond-rimmed blades. Cut 1/8-inch- (3.2-mm-) wide joints into concrete when cutting action does not tear, abrade, or otherwise damage surface and before concrete develops random cracks.

D. Isolation Joints in Slabs-on-Ground: After removing formwork, install joint-filler strips at slab junctions with vertical surfaces, such as column pedestals, foundation walls, grade beams, and other locations, as indicated.

1. Extend joint-filler strips full width and depth of joint, terminating flush with finished concrete surface unless otherwise indicated on Drawings.
2. Terminate full-width joint-filler strips not less than 1/2 inch (13 mm) or more than 1 inch (25 mm) below finished concrete surface, where joint sealants, specified in Section 079200 "Joint Sealants," are indicated.
3. Install joint-filler strips in lengths as long as practicable. Where more than one length is required, lace or clip sections together.

E. Doweled Joints:

1. Install dowel bars and support assemblies at joints where indicated on Drawings.
2. Lubricate or asphalt coat one-half of dowel bar length to prevent concrete bonding to one side of joint.

F. Dowel Plates: Install dowel plates at joints where indicated on Drawings.

3.5 CONCRETE PLACEMENT

A. Before placing concrete, verify that installation of formwork, reinforcement, embedded items, and vapor retarder is complete and that required inspections are completed.

1. Immediately prior to concrete placement, inspect vapor retarder for damage and deficient installation, and repair defective areas.
2. Provide continuous inspection of vapor retarder during concrete placement and make necessary repairs to damaged areas as Work progresses.

B. Notify Architect and testing and inspection agencies 24 hours prior to commencement of concrete placement.

C. Do not add water to concrete during delivery, at Project site, or during placement unless approved by Architect in writing, but not to exceed the amount indicated on the concrete delivery ticket.

1. Do not add water to concrete after adding high-range water-reducing admixtures to mixture.

D. Before test sampling and placing concrete, water may be added at Project site, subject to limitations of ACI 301 (ACI 301M), but not to exceed the amount indicated on the concrete delivery ticket.

1. Do not add water to concrete after adding high-range water-reducing admixtures to mixture.

E. Deposit concrete continuously in one layer or in horizontal layers of such thickness that no new concrete is placed on concrete that has hardened enough to cause seams or planes of weakness.

1. If a section cannot be placed continuously, provide construction joints as indicated.
2. Deposit concrete to avoid segregation.
3. Deposit concrete in horizontal layers of depth not to exceed formwork design pressures and in a manner to avoid inclined construction joints.
4. Consolidate placed concrete with mechanical vibrating equipment in accordance with ACI 301 (ACI 301M).

a. Do not use vibrators to transport concrete inside forms.
b. Insert and withdraw vibrators vertically at uniformly spaced locations to rapidly penetrate placed layer and at least 6 inches (150 mm) into preceding layer.
c. Do not insert vibrators into lower layers of concrete that have begun to lose plasticity.
d. At each insertion, limit duration of vibration to time necessary to consolidate concrete, and complete embedment of reinforcement and other embedded items without causing mixture constituents to segregate.

F. Deposit and consolidate concrete for floors and slabs in a continuous operation, within limits of construction joints, until placement of a panel or section is complete.

1. Do not place concrete floors and slabs in a checkerboard sequence.
2. Consolidate concrete during placement operations, so concrete is thoroughly worked around reinforcement and other embedded items and into corners.
3. Maintain reinforcement in position on chairs during concrete placement.
4. Screed slab surfaces with a straightedge and strike off to correct elevations.
5. Level concrete, cut high areas, and fill low areas.
6. Slope surfaces uniformly to drains where required.
7. Begin initial floating using bull floats or darbies to form a uniform and open-textured surface plane, before excess bleedwater appears on the surface.
8. Do not further disturb slab surfaces before starting finishing operations.

3.6 FINISHING FORMED SURFACES

A. As-Cast Surface Finishes:

1. ACI 301 (ACI 301M) Surface Finish SF-1.0: As-cast concrete texture imparted by form-facing material.

a. Patch voids larger than 1-1/2 inches (38 mm) wide or 1/2 inch (13 mm) deep.
b. Remove projections larger than 1 inch (25 mm).
c. Tie holes do not require patching.
d. Surface Tolerance: ACI 117 (ACI 117M) Class D.
e. Apply to concrete surfaces not exposed to public view

2. ACI 301 (ACI 301M) Surface Finish SF-2.0: As-cast concrete texture imparted by form-facing material, arranged in an orderly and symmetrical manner with a minimum of seams.

a. Patch voids larger than 3/4 inch (19 mm) wide or 1/2 inch (13 mm) deep.
b. Remove projections larger than 1/4 inch (6 mm).
c. Patch tie holes.
d. Surface Tolerance: ACI 117 (ACI 117M) Class B.
e. Locations: Apply to concrete surfaces exposed to public view, to receive a rubbed finish, or to be covered with a coating or covering material applied directly to concrete.

3. ACI 301 (ACI 301M) Surface Finish SF-3.0:

a. Patch voids larger than 3/4 inch (19 mm) wide or 1/2 inch (13 mm) deep.
b. Remove projections larger than 1/8 inch (3 mm).
c. Patch tie holes.
d. Surface Tolerance: ACI 117 (ACI 117M) Class A.
e. Locations: Apply to concrete surfaces exposed to public view, to receive a rubbed finish, or to be covered with a coating or covering material applied directly to concrete.

B. Related Unformed Surfaces:

1. At tops of walls, horizontal offsets, and similar unformed surfaces adjacent to formed surfaces, strike off smooth and finish with a color and texture matching adjacent formed surfaces.
2. Continue final surface treatment of formed surfaces uniformly across adjacent unformed surfaces unless otherwise indicated.

3.7 FINISHING FLOORS AND SLABS

A. Comply with ACI 302.1R recommendations for screeding, restraightening, and finishing operations for concrete surfaces. Do not wet concrete surfaces.

B. Scratch Finish:

1. While still plastic, texture concrete surface that has been screeded and bull-floated or darbied.
2. Use stiff brushes, brooms, or rakes to produce a profile depth of 1/4 inch (6 mm) in one direction.
3. Apply scratch finish to surfaces to receive concrete floor toppings or to receive mortar setting beds for bonded cementitious floor finishes.

C. Float Finish:

1. When bleedwater sheen has disappeared and concrete surface has stiffened sufficiently to permit operation of specific float apparatus, consolidate concrete surface with power-driven floats or by hand floating if area is small or inaccessible to power-driven floats.
2. Repeat float passes and restraightening until surface is left with a uniform, smooth, granular texture and complies with ACI 117 (ACI A117M) tolerances for conventional concrete.
3. Apply float finish to surfaces to receive trowel finish

D. Trowel Finish:

1. After applying float finish, apply first troweling and consolidate concrete by hand or power-driven trowel.
2. Continue troweling passes and restraighten until surface is free of trowel marks and uniform in texture and appearance.
3. Grind smooth any surface defects that would telegraph through applied coatings or floor coverings.
4. Do not add water to concrete surface.
5. Do not apply hard-troweled finish to concrete, which has a total air content greater than 3 percent.
6. Apply a trowel finish to surfaces[exposed to view or to be covered with resilient flooring, carpet, ceramic or quarry tile set over a cleavage membrane, paint, or another thin-film-finish coating system.
7. Finish and measure surface, so gap at any point between concrete surface and an unleveled, freestanding, 10-ft.- (3.05-m-) long straightedge resting on two high spots and placed anywhere on the surface does not exceed 1/4 inch (6 mm).

E. Broom Finish: Apply a broom finish to exterior concrete platforms, steps, ramps, and locations indicated on Drawings.

1. Immediately after float finishing, slightly roughen trafficked surface by brooming with fiber-bristle broom perpendicular to main traffic route.
2. Coordinate required final finish with Architect before application.

3.8 INSTALLATION OF MISCELLANEOUS CONCRETE ITEMS

A. Filling In:

1. Fill in holes and openings left in concrete structures after Work of other trades is in place unless otherwise indicated.
2. Mix, place, and cure concrete, as specified, to blend with in-place construction.
3. Provide other miscellaneous concrete filling indicated or required to complete the Work.

B. Curbs: Provide monolithic finish to interior curbs by stripping forms while concrete is still green and by steel-troweling surfaces to a hard, dense finish with corners, intersections, and terminations slightly rounded.

C. Equipment Bases and Foundations:

1. Coordinate sizes and locations of concrete bases with actual equipment provided.

2. Construct concrete bases 4 inches (100 mm) high unless otherwise indicated on Drawings, and extend base not less than 6 inches (150 mm) in each direction beyond the maximum dimensions of supported equipment unless otherwise indicated on Drawings, or unless required for seismic anchor support.
3. Minimum Compressive Strength: 5000 psi (34.5 MPa) at 28 days.
4. Install dowel rods to connect concrete base to concrete floor. Unless otherwise indicated, install dowel rods on 18-inch (450-mm) centers around the full perimeter of concrete base.
5. For supported equipment, install epoxy-coated anchor bolts that extend through concrete base and anchor into structural concrete substrate.
6. Prior to pouring concrete, place and secure anchorage devices.

    a. Use setting drawings, templates, diagrams, instructions, and directions furnished with items to be embedded.
    b. Cast anchor-bolt insert into bases.
    c. Install anchor bolts to elevations required for proper attachment to supported equipment.

D. Steel Pan Stairs: Provide concrete fill for steel pan stair treads, landings, and associated items.

1. Cast-in inserts and accessories, as shown on Drawings.
2. Screed, tamp, and trowel finish concrete surfaces.

3.9 CONCRETE CURING

A. Protect freshly placed concrete from premature drying and excessive cold or hot temperatures.

1. Comply with ACI 301 (ACI 301M) and ACI 306.1 for cold weather protection during curing.
2. Comply with ACI 301 (ACI 301M) and ACI 305.1 (ACI 305.1M) for hot-weather protection during curing.

B. Evaporation Retarder: Apply evaporation retarder to unformed concrete surfaces if hot, dry, or windy conditions cause moisture loss approaching 0.2 lb/sq. ft. x h (1 kg/sq. m x h) before and during finishing operations. Apply in accordance with manufacturer's written instructions after placing, screeding, and bull floating or darbying concrete, but before float finishing.

C. Curing Formed Surfaces: Comply with ACI 308.1 (ACI 308.1M) as follows:

1. Cure formed concrete surfaces, including underside of beams, supported slabs, and other similar surfaces.
2. Cure concrete containing color pigments in accordance with color pigment manufacturer's instructions.
3. If forms remain during curing period, moist cure after loosening forms.
4. If removing forms before end of curing period, continue curing for remainder of curing period, as follows:

    a. Continuous Fogging: Maintain standing water on concrete surface until final setting of concrete.
    b. Continuous Sprinkling: Maintain concrete surface continuously wet.
    c. Absorptive Cover: Pre-dampen absorptive material before application; apply additional water to absorptive material to maintain concrete surface continuously wet.

d. Water-Retention Sheeting Materials: Cover exposed concrete surfaces with sheeting material, taping, or lapping seams.

e. Membrane-Forming Curing Compound: Apply uniformly in continuous operation by power spray or roller in accordance with manufacturer's written instructions.

1) Recoat areas subject to heavy rainfall within three hours after initial application.

2) Maintain continuity of coating and repair damage during curing period.

D. Curing Unformed Surfaces: Comply with ACI 308.1 (ACI 308.1M) as follows:

1. Begin curing immediately after finishing concrete.

2. Interior Concrete Floors:

a. Floors to Receive Floor Coverings Specified in Other Sections: Contractor has option of the following:

1) Absorptive Cover: As soon as concrete has sufficient set to permit application without marring concrete surface, install prewetted absorptive cover over entire area of floor.

a) Lap edges and ends of absorptive cover not less than 12-inches (300-mm).

b) Maintain absorptive cover water saturated, and in place, for duration of curing period, but not less than seven days.

2) Moisture-Retaining-Cover Curing: Cover concrete surfaces with moisture-retaining cover for curing concrete, placed in widest practicable width, with sides and ends lapped at least 12 inches (300 mm), and sealed by waterproof tape or adhesive.

a) Immediately repair any holes or tears during curing period, using cover material and waterproof tape.

b) Cure for not less than seven days.

3) Ponding or Continuous Sprinkling of Water: Maintain concrete surfaces continuously wet for not less than seven days, utilizing one, or a combination of, the following:

a) Water.

b) Continuous water-fog spray.

b. Floors to Receive Penetrating Liquid Floor Treatments: Contractor has option of the following:

1) Absorptive Cover: As soon as concrete has sufficient set to permit application without marring concrete surface, install prewetted absorptive cover over entire area of floor.

a) Lap edges and ends of absorptive cover not less than 12 inches (300 mm).

b) Maintain absorptive cover water saturated, and in place, for duration of curing period, but not less than seven days.

2) Moisture-Retaining-Cover Curing: Cover concrete surfaces with moisture-retaining cover for curing concrete, placed in widest practicable width, with sides and ends lapped at least 12 inches (300 mm), and sealed by waterproof tape or adhesive.

a) Immediately repair any holes or tears during curing period, using cover material and waterproof tape.
b) Cure for not less than seven days.

3) Ponding or Continuous Sprinkling of Water: Maintain concrete surfaces continuously wet for not less than seven days, utilizing one, or a combination of, the following:

a) Water.
b) Continuous water-fog spray.

c. Floors to Receive Polished Finish: Contractor has option of the following:

1) Absorptive Cover: As soon as concrete has sufficient set to permit application without marring concrete surface, install prewetted absorptive cover over entire area of floor.

a) Lap edges and ends of absorptive cover not less than 12 inches (300 mm).
b) Maintain absorptive cover water saturated, and in place, for duration of curing period, but not less than seven days.

2) Ponding or Continuous Sprinkling of Water: Maintain concrete surfaces continuously wet for not less than seven days, utilizing one, or a combination of, the following:

a) Water.
b) Continuous water-fog spray.

d. Floors to Receive Curing Compound:

1) Apply uniformly in continuous operation by power spray or roller in accordance with manufacturer's written instructions.
2) Recoat areas subjected to heavy rainfall within three hours after initial application.
3) Maintain continuity of coating, and repair damage during curing period.
4) Removal: After curing period has elapsed, remove curing compound without damaging concrete surfaces by method recommended by curing compound manufacturer unless manufacturer certifies curing compound does not interfere with bonding of floor covering used on Project.

e. Floors to Receive Curing and Sealing Compound:

1) Apply uniformly to floors and slabs indicated in a continuous operation by power spray or roller in accordance with manufacturer's written instructions.

2) Recoat areas subjected to heavy rainfall within three hours after initial application.
3) Repeat process 24 hours later, and apply a second coat. Maintain continuity of coating, and repair damage during curing period.

3.10 TOLERANCES

A. Conform to ACI 117 (ACI 117M).

B. Prepare, clean, and install joint filler in accordance with manufacturer's written instructions.

1. Defer joint filling until concrete has aged at least one month(s).
2. Do not fill joints until construction traffic has permanently ceased.

C. Remove dirt, debris, saw cuttings, curing compounds, and sealers from joints; leave contact faces of joints clean and dry.

D. Install semirigid joint filler full depth in saw-cut joints and at least 2 inches (50 mm) deep in formed joints.

E. Overfill joint, and trim joint filler flush with top of joint after hardening.

3.11 CONCRETE SURFACE REPAIRS

A. Defective Concrete:

1. Repair and patch defective areas when approved by Architect.
2. Remove and replace concrete that cannot be repaired and patched to Architect's approval.

B. Patching Mortar: Mix dry-pack patching mortar, consisting of 1 part portland cement to 2-1/2 parts fine aggregate passing a No. 16 (1.18-mm) sieve, using only enough water for handling and placing.

C. Repairing Formed Surfaces: Surface defects include color and texture irregularities, cracks, spalls, air bubbles, honeycombs, rock pockets, fins and other projections on the surface, and stains and other discolorations that cannot be removed by cleaning.

1. Immediately after form removal, cut out honeycombs, rock pockets, and voids more than 1/2 inch (13 mm) in any dimension to solid concrete.

a. Limit cut depth to 3/4 inch (19 mm).
b. Make edges of cuts perpendicular to concrete surface.
c. Clean, dampen with water, and brush-coat holes and voids with bonding agent.
d. Fill and compact with patching mortar before bonding agent has dried.
e. Fill form-tie voids with patching mortar or cone plugs secured in place with bonding agent.

2. Repair defects on surfaces exposed to view by blending white portland cement and standard portland cement, so that, when dry, patching mortar matches surrounding color.

a. Patch a test area at inconspicuous locations to verify mixture and color match before proceeding with patching.
b. Compact mortar in place and strike off slightly higher than surrounding surface.

3. Repair defects on concealed formed surfaces that will affect concrete's durability and structural performance as determined by Architect.

D. Repairing Unformed Surfaces:

1. Test unformed surfaces, such as floors and slabs, for finish, and verify surface tolerances specified for each surface.

a. Correct low and high areas.
b. Test surfaces sloped to drain for trueness of slope and smoothness; use a sloped template.

2. Repair finished surfaces containing surface defects, including spalls, popouts, honeycombs, rock pockets, crazing, and cracks in excess of 0.01 inch (0.25 mm) wide or that penetrate to reinforcement or completely through unreinforced sections regardless of width, and other objectionable conditions.

3. After concrete has cured at least 14 days, correct high areas by grinding.

4. Correct localized low areas during, or immediately after, completing surface-finishing operations by cutting out low areas and replacing with patching mortar.

a. Finish repaired areas to blend into adjacent concrete.

5. Correct other low areas scheduled to receive floor coverings with a repair underlayment.

a. Prepare, mix, and apply repair underlayment and primer in accordance with manufacturer's written instructions to produce a smooth, uniform, plane, and level surface.
b. Feather edges to match adjacent floor elevations.

6. Correct other low areas scheduled to remain exposed with repair topping.

a. Cut out low areas to ensure a minimum repair topping depth of 1/4 inch (6 mm) to match adjacent floor elevations.
b. Prepare, mix, and apply repair topping and primer in accordance with manufacturer's written instructions to produce a smooth, uniform, plane, and level surface.

7. Repair defective areas, except random cracks and single holes 1 inch (25 mm) or less in diameter, by cutting out and replacing with fresh concrete.

a. Remove defective areas with clean, square cuts, and expose steel reinforcement with at least a 3/4-inch (19-mm) clearance all around.
b. Dampen concrete surfaces in contact with patching concrete and apply bonding agent.
c. Mix patching concrete of same materials and mixture as original concrete, except without coarse aggregate.

d. Place, compact, and finish to blend with adjacent finished concrete.
e. Cure in same manner as adjacent concrete.

8. Repair random cracks and single holes 1 inch (25 mm) or less in diameter with patching mortar.

a. Groove top of cracks and cut out holes to sound concrete, and clean off dust, dirt, and loose particles.
b. Dampen cleaned concrete surfaces and apply bonding agent.
c. Place patching mortar before bonding agent has dried.
d. Compact patching mortar and finish to match adjacent concrete.
e. Keep patched area continuously moist for at least 72 hours.

E. Perform structural repairs of concrete, subject to Architect's approval, using epoxy adhesive and patching mortar.

F. Repair materials and installation not specified above may be used, subject to Architect's approval.

3.12 FIELD QUALITY CONTROL

A. Special Inspections: Owner will engage a special inspector to perform field tests and inspections and prepare testing and inspection reports.

B. Testing Agency: Owner will engage a qualified testing and inspecting agency to perform tests and inspections and to submit reports.

1. Testing agency shall immediately report to Architect, Contractor, and concrete manufacturer any failure of Work to comply with Contract Documents.

2. Testing agency shall report results of tests and inspections, in writing, to Owner, Architect, Contractor, and concrete manufacturer within 48 hours of inspections and tests.

a. Test reports shall include reporting requirements of ASTM C31/C31M and ASTM C39/C39M, including the following as applicable to each test and inspection:

1) Project name.
2) Name of testing agency.
3) Names and certification numbers of field and laboratory technicians performing inspections and testing.
4) Name of concrete manufacturer.
5) Date and time of inspection, sampling, and field testing.
6) Date and time of concrete placement.
7) Location in Work of concrete represented by samples.
8) Date and time sample was obtained.
9) Truck and batch ticket numbers.
10) Design compressive strength at 28 days.
11) Concrete mixture designation, proportions, and materials.
12) Field test results.

13) Information on storage and curing of samples before testing, including curing method and maximum and minimum temperatures during initial curing period.
14) Type of fracture and compressive break strengths at seven days and 28 days.

C. Batch Tickets: For each load delivered, submit three copies of batch delivery ticket to testing agency, indicating quantity, mix identification, admixtures, design strength, aggregate size, design air content, design slump at time of batching, and amount of water that can be added at Project site.

D. Inspections:

1. Headed bolts and studs.
2. Verification of use of required design mixture.
3. Concrete placement, including conveying and depositing.
4. Curing procedures and maintenance of curing temperature.
5. Verification of concrete strength before removal of shores and forms from beams and slabs.

E. Concrete Tests: Testing of composite samples of fresh concrete obtained in accordance with ASTM C 172/C 172M shall be performed in accordance with the following requirements:

1. Testing Frequency: Obtain one composite sample for each day's pour of each concrete mixture exceeding 5 cu. yd. (4 cu. m), but less than 25 cu. yd. (19 cu. m), plus one set for each additional 50 cu. yd. (38 cu. m) or fraction thereof.

   a. When frequency of testing provides fewer than five compressive-strength tests for each concrete mixture, testing shall be conducted from at least five randomly selected batches or from each batch if fewer than five are used.

2. Slump: ASTM C143/C143M:

   a. One test at point of placement for each composite sample, but not less than one test for each day's pour of each concrete mixture.
   b. Perform additional tests when concrete consistency appears to change.

3. Air Content: ASTM C231/C231M pressure method, for normal-weight concrete.

   a. One test for each composite sample, but not less than one test for each day's pour of each concrete mixture.

4. Concrete Temperature: ASTM C1064/C1064M:

   a. One test hourly when air temperature is 40 deg F (4.4 deg C) and below or 80 deg F (27 deg C) and above, and one test for each composite sample.

5. Compression Test Specimens: ASTM C31/C31M:

   a. Cast and field cure two sets of two standard cylinder specimens for each composite sample.

6. Compressive-Strength Tests: ASTM C39/C39M.

a. Test one set of two field-cured specimens at seven days and one set of two specimens at 28 days.
b. A compressive-strength test shall be the average compressive strength from a set of two specimens obtained from same composite sample and tested at age indicated.

7. When strength of field-cured cylinders is less than 85 percent of companion laboratory-cured cylinders, Contractor shall evaluate operations and provide corrective procedures for protecting and curing in-place concrete.

8. Strength of each concrete mixture will be satisfactory if every average of any three consecutive compressive-strength tests equals or exceeds specified compressive strength, and no compressive-strength test value falls below specified compressive strength by more than 500 psi (3.4 MPa) if specified compressive strength is 5000 psi (34.5 MPa), or no compressive strength test value is less than 1 percent of specified compressive strength if specified compressive strength is greater than 5000 psi (34.5 MPa).

9. Nondestructive Testing: Impact hammer, sonoscope, or other nondestructive device may be permitted by Architect but will not be used as sole basis for approval or rejection of concrete.

10. Additional Tests:

a. Testing and inspecting agency shall make additional tests of concrete when test results indicate that slump, air entrainment, compressive strengths, or other requirements have not been met, as directed by Architect.
b. Testing and inspecting agency may conduct tests to determine adequacy of concrete by cored cylinders complying with ASTM C42/C42M or by other methods as directed by Architect.

1) Acceptance criteria for concrete strength shall be in accordance with ACI 301 (ACI 301M), section 1.6.6.3.

11. Additional testing and inspecting, at Contractor's expense, will be performed to determine compliance of replaced or additional work with specified requirements.

12. Correct deficiencies in the Work that test reports and inspections indicate do not comply with the Contract Documents.

3.13 PROTECTION

A. Protect concrete surfaces as follows:

1. Protect from petroleum stains.
2. Diaper hydraulic equipment used over concrete surfaces.
3. Prohibit vehicles from interior concrete slabs.
4. Prohibit use of pipe-cutting machinery over concrete surfaces.
5. Prohibit placement of steel items on concrete surfaces.
6. Prohibit use of acids or acidic detergents over concrete surfaces.
7. Protect liquid floor treatment from damage and wear during the remainder of construction period. Use protective methods and materials, including temporary covering, recommended in writing by liquid floor treatments installer.

8. Protect concrete surfaces scheduled to receive surface hardener or polished concrete finish using Floor Slab Protective Covering.

END OF SECTION 033000

SECTION 042000 - UNIT MASONRY

PART 1 - GENERAL

1.1 RELATED DOCUMENTS

A. Drawings and general provisions of the Contract, including General and Supplementary Conditions and Division 01 Specification Sections, apply to this Section.

1.2 SUMMARY

A. Section Includes:

1. Concrete masonry units.
2. Concrete building brick.
3. Decorative concrete masonry units.
4. Mortar and grout.
5. Steel reinforcing bars.
6. Masonry-joint reinforcement.
7. Ties and anchors.
8. Embedded flashing.
9. Miscellaneous masonry accessories.

B. Products Installed but not Furnished under This Section:

1. Cast-stone trim in unit masonry.
2. Steel lintels in unit masonry.
3. Steel shelf angles for supporting unit masonry.

C. Related Requirements:

1. Section 051200 "Structural Steel Framing" for installing anchor sections of adjustable masonry anchors for connecting to structural steel frame.
2. Section 076200 "Sheet Metal Flashing and Trim" for exposed sheet metal flashing and for furnishing manufactured reglets installed in masonry joints.

1.3 DEFINITIONS

A. CMU(s): Concrete masonry unit(s).

B. Reinforced Masonry: Masonry containing reinforcing steel in grouted cells.

1.4 PREINSTALLATION MEETINGS

A. Preinstallation Conference: Conduct conference at Project site.

1.5 ACTION SUBMITTALS

A. Product Data: For each type of product.

B. Sustainable Design Submittals:

1. Product Certificates: For regional materials, indicating location of material manufacturer and point of extraction, harvest, or recovery for each raw material. Include distance to Project and cost for each regional material.

C. Shop Drawings: For the following:

1. Masonry Units: Show sizes, profiles, coursing, and locations of special shapes.
2. Stone Trim Units: Show sizes, profiles, and locations of each stone trim unit required.
3. Reinforcing Steel: Detail bending, lap lengths, and placement of unit masonry reinforcing bars. Comply with ACI 315. Show elevations of reinforced walls.
4. Fabricated Flashing: Detail corner units, end-dam units, and other special applications.

D. Samples for Verification: For each type and color of the following:

1. Exposed Decorative CMUs.
2. Pigmented mortar. Make Samples using same sand and mortar ingredients to be used on Project.
3. Weep holes and cavity vents.
4. Accessories embedded in masonry.

1.6 INFORMATIONAL SUBMITTALS

A. Material Certificates: For each type and size of the following:

1. Masonry units.

a. Include data on material properties material test reports substantiating compliance with requirements.
b. For masonry units used in structural masonry, include data and calculations establishing average net-area compressive strength of units.

2. Integral water repellent used in CMUs.
3. Cementitious materials. Include name of manufacturer, brand name, and type.
4. Mortar admixtures.
5. Preblended, dry mortar mixes. Include description of type and proportions of ingredients.
6. Grout mixes. Include description of type and proportions of ingredients.
7. Reinforcing bars.
8. Joint reinforcement.
9. Anchors, ties, and metal accessories.

B. Mix Designs: For each type of mortar and grout. Include description of type and proportions of ingredients.

1. Include test reports for mortar mixes required to comply with property specification. Test according to ASTM C 109/C 109M for compressive strength, ASTM C 1506 for water retention, and ASTM C 91/C 91M for air content.

2. Include test reports, according to ASTM C 1019, for grout mixes required to comply with compressive strength requirement.

C. Statement of Compressive Strength of Masonry: For each combination of masonry unit type and mortar type, provide statement of average net-area compressive strength of masonry units, mortar type, and resulting net-area compressive strength of masonry determined according to TMS 602.

D. Cold-Weather and Hot-Weather Procedures: Detailed description of methods, materials, and equipment to be used to comply with requirements.

1.7 QUALITY ASSURANCE

A. Testing Agency Qualifications: Qualified according to ASTM C 1093 for testing indicated.

B. Preinstallation Conference: Conduct conference at Project site to comply with requirements in Division 01 Section "Project Management and Coordination."

C. Mockups: Build mockups to verify selections made under Sample submittals, to demonstrate aesthetic effects, and to set quality standards for materials and execution.

1. Build mockup of typical wall area as shown on Drawings.
2. Build mockups for typical exterior wall in sizes approximately 48 inches long by 48 inches high by full thickness, including face and backup wythes and accessories.

    a. Include a sealant-filled joint at least 16 inches long in each exterior wall mockup.
    b. Include lower corner of window opening at upper corner of exterior wall mockup. Make opening approximately 12 inches wide by 16 inches high.
    c. Include through-wall flashing installed for a 24-inch length in corner of exterior wall mockup approximately 16 inches down from top of mockup, with a 12-inch length of flashing left exposed to view (omit masonry above half of flashing).
    d. Include metal studs, sheathing, water-resistive barrier, veneer anchors, flashing, cavity drainage material, and weep holes in exterior masonry-veneer wall mockup.

3. Where masonry is to match existing, erect mockups adjacent and parallel to existing surface.
4. Clean one-half of exposed faces of mockups with masonry cleaner as indicated.
5. Protect accepted mockups from the elements with weather-resistant membrane.
6. Approval of mockups is for color, texture, and blending of masonry units; relationship of mortar and sealant colors to masonry unit colors; tooling of joints; and aesthetic qualities of workmanship.

    a. Approval of mockups is also for other material and construction qualities specifically approved by Architect in writing.
    b. Approval of mockups does not constitute approval of deviations from the Contract Documents contained in mockups unless Architect specifically approves such deviations in writing.

7. Protect mockups from damage and cover as necessary.
8. Allow for possible multiple panel mockups as may be deemed necessary by the Architect/Owner to ensure compatible match to existing.
9. Subject to compliance with requirements, approved mockups may become part of the completed Work if undisturbed at time of Substantial Completion.

1.8 DELIVERY, STORAGE, AND HANDLING

A. Store masonry units on elevated platforms in a dry location. If units are not stored in an enclosed location, cover tops and sides of stacks with waterproof sheeting, securely tied. If units become wet, do not install until they are dry.

B. Store cementitious materials on elevated platforms, under cover, and in a dry location. Do not use cementitious materials that have become damp.

C. Store aggregates where grading and other required characteristics can be maintained and contamination avoided.

D. Deliver preblended, dry mortar mix in moisture-resistant containers. Store preblended, dry mortar mix in delivery containers on elevated platforms in a dry location or in covered weatherproof dispensing silos.

E. Store masonry accessories, including metal items, to prevent corrosion and accumulation of dirt and oil.

1.9 FIELD CONDITIONS

A. Protection of Masonry: During construction, cover tops of walls, projections, and sills with waterproof sheeting at end of each day's work. Cover partially completed masonry when construction is not in progress.

1. Extend cover a minimum of 24 inches down both sides of walls, and hold cover securely in place.
2. Where one wythe of multiwythe masonry walls is completed in advance of other wythes, secure cover a minimum of 24 inches down face next to unconstructed wythe, and hold cover in place.

B. Do not apply uniform floor or roof loads for at least 12 hours and concentrated loads for at least three days after building masonry walls or columns.

C. Stain Prevention: Prevent grout, mortar, and soil from staining the face of masonry to be left exposed or painted. Immediately remove grout, mortar, and soil that come in contact with such masonry.

1. Protect base of walls from rain-splashed mud and from mortar splatter by spreading coverings on ground and over wall surface.
2. Protect sills, ledges, and projections from mortar droppings.
3. Protect surfaces of window and door frames, as well as similar products with painted and integral finishes, from mortar droppings.
4. Turn scaffold boards near the wall on edge at the end of each day to prevent rain from splashing mortar and dirt onto completed masonry.

D. Cold-Weather Requirements: Do not use frozen materials or materials mixed or coated with ice or frost. Do not build on frozen substrates. Remove and replace unit masonry damaged by frost or by freezing conditions. Comply with cold-weather construction requirements contained in TMS 602.

1. Do not lay masonry when the temperature of outside air is below 40 deg. F, unless means are provided to heat and maintain the temperature of the masonry materials and protect the completed work from freezing, and as may be permitted with the use of non-chloride accelerator. Protection shall consist of heating and maintaining the temperature of the masonry materials to at least 40 deg F, and maintaining an air temperature above 40 deg. F on both sides of the masonry for at least 48 hours as follows:

    a. Cold-Weather Construction: Heat mixing water and sand to produce mortar and grout temperatures between 40 and 120 deg F. Maintain mortar and grout above freezing. Heat masonry units to 40 deg F if grouting.
    b. Cold-Weather Protection: Cover masonry with insulating blankets or provide enclosure and heat to maintain temperatures above 32 deg F for 48 hours after construction. Install wind breaks when wind velocity exceeds 15 mi./h.

2. Do not lay masonry units which are wet or frozen. Do not build on frozen subgrade or setting beds.
3. Remove any ice or snow formed on masonry bed by carefully applying heat until top surface is dry to the touch.
4. Remove and replace masonry damaged by freezing conditions.
5. Do not use additives or accelerators with calcium chloride. Other accelerators may be used but only with approval of Architect.
6. Cold-Weather Cleaning: Use liquid cleaning methods only when air temperature is 40 deg F and higher and will remain so until masonry has dried, but not less than seven days after completing cleaning.

E. Hot-Weather Requirements: Comply with hot-weather construction requirements contained in TMS 602.

F. Protect unit masonry work when temperature and humidity conditions produce excessive evaporation of water from mortar and grout. Provide artificial shade and wind breaks and use cooled materials as required. Do not apply mortar to substrates with temperatures of 100 deg F and above

PART 2 - PRODUCTS

2.1 MANUFACTURERS

A. Source Limitations for Masonry Units: Obtain exposed masonry units of a uniform texture and color, or a uniform blend within the ranges accepted for these characteristics, from single source from single manufacturer for each product required.

B. Source Limitations for Mortar Materials: Obtain mortar ingredients of a uniform quality, including color for exposed masonry, from single manufacturer for each cementitious component and from single source or producer for each aggregate.

2.2 PERFORMANCE REQUIREMENTS

A. Provide structural unit masonry that develops indicated net-area compressive strengths at 28 days.

1. Determine net-area compressive strength of masonry from average net-area compressive strengths of masonry units and mortar types (unit-strength method) according to TMS 602.
2. Determine net-area compressive strength of masonry by testing masonry prisms according to ASTM C 1314.

2.3 UNIT MASONRY, GENERAL

A. Masonry Standard: Comply with TMS 602, except as modified by requirements in the Contract Documents.

B. Defective Units: Referenced masonry unit standards may allow a certain percentage of units to contain chips, cracks, or other defects exceeding limits stated. Do not use units where such defects are exposed in the completed Work.

C. Fire-Resistance Ratings: Where indicated, provide units that comply with requirements for fire-resistance ratings indicated as determined by testing according to ASTM E 119, by equivalent masonry thickness, or by other means, as acceptable to authorities having jurisdiction.

1. Where fire-resistance-rated construction is indicated, units shall be listed and labeled by a qualified testing agency acceptable to authorities having jurisdiction.

2.4 CONCRETE MASONRY UNITS

A. Shapes: Provide shapes indicated and as follows, with exposed surfaces matching exposed faces of adjacent units unless otherwise indicated.

1. Provide special shapes for lintels, corners, jambs, sashes, movement joints, headers, bonding, and other special conditions.
2. Provide bullnose units for outside corners unless otherwise indicated.

B. Integral Water Repellent: Provide units made with integral water repellent for exposed units where indicated.

1. Integral Water Repellent: Liquid polymeric, integral water-repellent admixture that does not reduce flexural bond strength. Units made with integral water repellent, when tested according to ASTM E 514/E 514M as a wall assembly made with mortar containing integral water-repellent manufacturer's mortar additive, with test period extended to 24 hours, shall show no visible water or leaks on the back of test specimen.

a. Products: Subject to compliance with requirements, available manufacturers offering products that may be incorporated into the Work include the following listed manufacturer/product, any deviation from the requirements requires approval by the architect:

1) ACM Chemistries; RainBloc.
2) BASF Corporation-Construction Systems; MasterPel 240 (Pre-2014: Rheopel Plus) or MasterPel 200HD (Pre-2014: Rheopel 200HD).
3) Grace Construction Products; W.R. Grace & Co. -- Conn.; Dry-Block.

C. CMUs: ASTM C 90.

1. Unit Compressive Strength: Provide units with minimum average net-area compressive strength of 2650 psi (14.8 MPa).
2. Density Classification: Normal weight.
3. Size (Width): Manufactured to dimensions 3/8 inch less than nominal dimensions.
4. Sizes as shown on drawings and as may be required.
5. Exposed Faces: Provide color and texture matching the range represented by Architect's sample.

D. Decorative CMUs: ASTM C 90.

1. Products: Subject to compliance with requirements, provide the following:

   a. Midwest Block and Brick.Insert, in separate subparagraphs, manufacturer's name; product name or designation.

2. Unit Compressive Strength: Provide units with minimum average net-area compressive strength of 2650 psi.
3. Density Classification: Normal weight.
4. Size (Width): Manufactured to dimensions specified in "CMUs" Paragraph.
5. Pattern and Texture:

   a. Standard pattern, split-face finish.

6. Colors: To be confirmed; Match existing building .
7. Special Aggregate: Provide units made with aggregate matching aggregate in Architect's sample.

2.5 MASONRY LINTELS

A. Concrete Lintels: ASTM C 1623, matching CMUs in color, texture, and density classification; and with reinforcing bars indicated. Provide lintels with net-area compressive strength not less than that of CMUs.

B. Concrete Lintels: Precast or formed-in-place concrete lintels complying with requirements in Section 033000 "Cast-in-Place Concrete," and with reinforcing bars indicated.

C. Masonry Lintels: Prefabricated or built-in-place masonry lintels made from bond beam CMUs matching adjacent CMUs in color, texture, and density classification, with reinforcing bars placed as indicated and filled with coarse grout. Cure precast lintels before handling and installing. Temporarily support built-in-place lintels until cured.

2.6 MORTAR AND GROUT MATERIALS

A. Regional Materials: Aggregate for mortar and grout shall be manufactured within 100 miles of Project site from materials that have been extracted, harvested, or recovered, as well as manufactured, within 100 miles of Project site.

B. Portland Cement: ASTM C 150/C 150M, Type I or II, except Type III may be used for cold-weather construction. Provide natural color or white cement as required to produce mortar color indicated.

1. Alkali content shall not be more than 0.1 percent when tested according to ASTM C 114.

C. Hydrated Lime: ASTM C 207, Type S.

D. Portland Cement-Lime Mix: Packaged blend of portland cement and hydrated lime containing no other ingredients.

E. Masonry Cement: ASTM C 91/C 91M.

F. Mortar Cement: ASTM C 1329/C 1329M.

G. Mortar Pigments: Natural and synthetic iron oxides and chromium oxides, compounded for use in mortar mixes and complying with ASTM C 979/C 979M. Use only pigments with a record of satisfactory performance in masonry mortar.

H. Colored Cement Products: Packaged blend made from portland cement and hydrated lime or masonry cement and mortar pigments, all complying with specified requirements, and containing no other ingredients.

1. Colored Portland Cement-Lime Mix:

a. Products: Subject to compliance with requirements, available products that may be incorporated into the Work include, but are not limited to, the following:

1) Essroc; Riverton Portland Cement Lime Custom Color.
2) Holcim (US) Inc; Rainbow Mortamix Custom Color Cement/Lime.
3) Lafarge North America Inc.; Eaglebond Portland & Lime.
4) Lehigh Hanson; HeidelbergCement Group; Lehigh Custom Color Portland/Lime Cement.

2. Colored Masonry Cement:

a. Products: Subject to compliance with requirements, available products that may be incorporated into the Work include, but are not limited to, the following:

1) Cemex S.A.B. de C.V.; Richcolor Masonry Cement.
2) Essroc.
3) Holcim (US) Inc; Rainbow Mortamix Custom Color Masonry Cement.
4) Lafarge North America Inc.; U.S. Cement Custom Color Masonry Cement.
5) Lehigh Hanson; HeidelbergCement Group; Lehigh Custom Color Masonry Cement.

I. Aggregate for Mortar: ASTM C 144.

1. For mortar that is exposed to view, use washed aggregate consisting of natural sand or crushed stone.
2. For joints less than 1/4 inch thick, use aggregate graded with 100 percent passing the No. 16 sieve.
3. White-Mortar Aggregates: Natural white sand or crushed white stone.
4. Colored-Mortar Aggregates: Natural sand or crushed stone of color necessary to produce required mortar color.

J. Aggregate for Grout: ASTM C 404.

K. Cold-Weather Admixture: Nonchloride, noncorrosive, accelerating admixture complying with ASTM C 494/C 494M, Type C, and recommended by manufacturer for use in masonry mortar of composition indicated.

1. Products: Subject to compliance with requirements, available manufacturers offering products that may be incorporated into the Work include the following listed manufacturer/product, any deviation from the requirements requires approval by the architect:

a. BASF Corporation-Construction Systems; .
b. Euclid Chemical Company (The); an RPM company; Accelguard 80.
c. Grace Construction Products; W.R. Grace & Co. -- Conn.; Morset.

L. Water-Repellent Admixture: Liquid water-repellent mortar admixture intended for use with CMUs containing integral water repellent from same manufacturer.

1. Products: Subject to compliance with requirements, available products that may be incorporated into the Work include, but are not limited to, the following:

a. ACM Chemistries; RainBloc for Mortar.
b. BASF Corporation-Construction Systems; MasterPel 240MA (Pre-2014: Rheopel Plus Mortar Admixture) or MasterPel 210D (Pre-2014: Rheopel Plus D).
c. Euclid Chemical Company (The); an RPM company; <Insert product designation>.
d. Grace Construction Products; W.R. Grace & Co. -- Conn.; Dry-Block Mortar Admixture.

M. Water: Potable.

2.7 REINFORCEMENT

A. Uncoated-Steel Reinforcing Bars: ASTM A 615/A 615M or ASTM A 996/A 996M, Grade 60.

B. Reinforcing Bar Positioners: Wire units designed to fit into mortar bed joints spanning masonry unit cells and to hold reinforcing bars in center of cells. Units are formed from 0.148-inch steel wire, hot-dip galvanized after fabrication. Provide units designed for number of bars indicated.

C. Masonry-Joint Reinforcement, General: ASTM A 951/A 951M.

1. Interior Walls: Mill- galvanized carbon steel.
2. Exterior Walls: Hot-dip galvanized carbon steel.
3. Wire Size for Side Rods: 0.148-inch 0.187-inch diameter.
4. Wire Size for Cross Rods: 0.148-inch 0.187-inch diameter.
5. Wire Size for Veneer Ties: 0.148-inch 0.187-inch diameter.
6. Spacing of Cross Rods, Tabs, and Cross Ties: Not more than 16 inches o.c.
7. Provide in lengths of not less than 10 feet, with prefabricated corner and tee units.

D. Masonry-Joint Reinforcement for Single-Wythe Masonry: Ladder type with single pair of side rods.

2.8 TIES AND ANCHORS

A. General: Ties and anchors shall extend at least 1-1/2 inches into veneer but with at least a 5/8-inch cover on outside face.

B. Materials: Provide ties and anchors specified in this article that are made from materials that comply with the following unless otherwise indicated:

1. Mill-Galvanized, Carbon-Steel Wire: ASTM A 82/A 82M, with ASTM A 641/A 641M, Class 1 coating.
2. Hot-Dip Galvanized, Carbon-Steel Wire: ASTM A 82/A 82M, with ASTM A 153/A 153M, Class B-2 coating.
3. Galvanized-Steel Sheet: ASTM A 653/A 653M, Commercial Steel, G60 zinc coating.
4. Steel Sheet, Galvanized after Fabrication: ASTM A 1008/A 1008M, Commercial Steel, with ASTM A 153/A 153M, Class B coating.
5. Stainless-Steel Sheet: ASTM A 240/A 240M or ASTM A 666, Type 304.
6. Steel Plates, Shapes, and Bars: ASTM A 36/A 36M.

C. Corrugated-Metal Ties: Not Allowed.-.

D. Individual Wire Ties: Rectangular units with closed ends and not less than 4 inches wide.

1. Z-shaped ties with ends bent 90 degrees to provide hooks not less than 2 inches long may be used for masonry constructed from solid units.
2. Where wythes do not align, use adjustable ties with pintle-and-eye connections having a maximum adjustment of 1-1/4 inches.
3. Wire: Fabricate from 3/16-inch- diameter, wire. Mill-galvanized wire ties may be used in interior walls unless otherwise indicated.

E. Adjustable Anchors for Connecting to Structural Steel Framing: Provide anchors that allow vertical or horizontal adjustment but resist tension and compression forces perpendicular to plane of wall.

1. Anchor Section for Welding to Steel Frame: Crimped 1/4-inch- diameter, hot-dip galvanized steel stainless-steel wire. Mill-galvanized wire may be used at interior walls unless otherwise indicated.
2. Tie Section: Triangular-shaped wire tie made from 0.187-inch- diameter, hot-dip galvanized steel stainless-steel wire. Mill-galvanized wire may be used at interior walls unless otherwise indicated.

F. Adjustable Anchors for Connecting to Concrete: Provide anchors that allow vertical or horizontal adjustment but resist tension and compression forces perpendicular to plane of wall.

1. Connector Section: Dovetail tabs for inserting into dovetail slots in concrete and attached to tie section; formed from 0.060-inch- thick steel sheet, galvanized after fabrication 0.105-inch- thick steel sheet, galvanized after fabrication 0.062-inch- thick, stainless-steel sheet 0.109-inch- thick, stainless-steel sheet.

   a. 0.064-inch- thick, galvanized-steel sheet may be used at interior walls unless otherwise indicated.

2. Tie Section: Triangular-shaped wire tie made from 0.187-inch- diameter, hot-dip galvanized steel stainless-steel wire. Mill-galvanized wire may be used at interior walls unless otherwise indicated.

G. Partition Top Anchors: 0.105-inch- thick metal plate with a 3/8-inch- diameter metal rod 6 inches long welded to plate and with closed-end plastic tube fitted over rod that allows rod to move in and out of tube. Fabricate from steel, hot-dip galvanized after fabrication stainless steel.

H. Rigid Anchors: Fabricate from steel bars 1-1/2 inches wide by 1/4 inch thick by 24 inches long, with ends turned up 2 inches or with cross pins unless otherwise indicated bent to configuration indicated.

1. Corrosion Protection: Hot-dip galvanized to comply with ASTM A 153/A 153M Epoxy coating 0.020 inch thick Rust-inhibitive paint.

I. Adjustable Masonry-Veneer Anchors:

1. General: Provide anchors that allow vertical adjustment but resist a 100-lbf load in both tension and compression perpendicular to plane of wall without deforming or developing play in excess of 1/16 inch.
2. Fabricate sheet metal anchor sections and other sheet metal parts from 0.075-inch- thick steel sheet, galvanized after fabrication .
3. Fabricate wire ties from 0.187-inch- diameter, hot-dip galvanized-steelwire unless otherwise indicated.
4. Contractor's Option: Unless otherwise indicated, provide any of the adjustable masonry-veneer anchors specified.
5. Screw-Attached, Masonry-Veneer Anchors: Wire tie and a rib-stiffened, sheet metal anchor section with screw holes top and bottom, with a projecting vertical tab having a slotted hole for inserting wire tie.
6. Screw-Attached, Masonry-Veneer Anchors: Wire tie and a rib-stiffened, sheet metal anchor section with screw holes top and bottom, with projecting tabs having holes for inserting vertical legs of wire tie formed to fit anchor section.

2.9 EMBEDDED FLASHING MATERIALS

A. Flexible Flashing: Use one of the following unless otherwise indicated:

1. Copper-Laminated Flashing: 5-oz./sq. ft. 7-oz./sq. ft. copper sheet bonded between two layers of glass-fiber cloth. Use only where flashing is fully concealed in masonry.

a. Products: Subject to compliance with requirements, available manufacturers offering products that may be incorporated into the Work include the following listed manufacturer/product, any deviation from the requirements requires approval by the architect:

1) Advanced Building Products Inc.; Copper Fabric FlashingCopper Sealtite 2000.
2) Hohmann & Barnard, Inc; Copper Fabric Flashing.
3) York Manufacturing, Inc; Multi-Flash 500.
4) Insert manufacturer's name; product name or designation.

2. Elastomeric Thermoplastic Flashing: Composite flashing product consisting of a polyester-reinforced ethylene interpolymer alloy.

a. Products: Subject to compliance with requirements, available manufacturers offering products that may be incorporated into the Work include the following listed manufacturer/product, any deviation from the requirements requires approval by the architect:

1) Du Pont; Thru-Wall Flashing.
2) Hohmann & Barnard, Inc; Flex-Flash.

3) Hyload, Inc.; Hyload Cloaked Flashing System.
4) Mortar Net USA, Ltd; Total Flash.

b. Self-Adhesive Sheet with Drip Edge: Elastomeric thermoplastic flashing, 0.025 inch thick, with a 0.015-inch- thick coating of rubberized-asphalt adhesive. Where flashing extends to face of masonry, rubberized-asphalt coating is held back approximately 1-1/2 inches from edge.

1) Color: Gray White Tan/buff Black or closest to match existing brick.

c. Accessories: Provide preformed corners, end dams, other special shapes, and seaming materials produced by flashing manufacturer.

B. Application: Unless otherwise indicated, use the following:

1. Where flashing is indicated to receive counterflashing, use metal flashing.
2. Where flashing is indicated to be turned down at or beyond the wall face, use metal flashing.
3. Where flashing is partly exposed and is indicated to terminate at the wall face, use metal flashing with a drip edge with a sealant stop or flexible flashing with a metal drip edge or elastomeric thermoplastic flashing with a drip edge or flexible flashing with a metal sealant stop.
4. Where flashing is fully concealed, use metal flashing or flexible flashing.

C. Solder and Sealants for Sheet Metal Flashings: As specified in Section 076200 "Sheet Metal Flashing and Trim."

1. Solder for Stainless Steel: ASTM B 32, Grade Sn60 Grade Sn96, with acid flux of type recommended by stainless-steel sheet manufacturer.
2. Solder for Copper: ASTM B 32, Grade Sn50 with maximum lead content of 0.2 percent.
3. Elastomeric Sealant: ASTM C 920, chemically curing urethane polysulfide silicone sealant; of type, grade, class, and use classifications required to seal joints in sheet metal flashing and remain watertight.

D. Adhesives, Primers, and Seam Tapes for Flashings: Flashing manufacturer's standard products or products recommended by flashing manufacturer for bonding flashing sheets to each other and to substrates.

E. Termination Bars for Flexible Flashing: Aluminum Stainless steel bars 1/8 inch by 1 inch.

2.10 MISCELLANEOUS MASONRY ACCESSORIES

A. Compressible Filler: Premolded filler strips complying with ASTM D 1056, Grade 2A1; compressible up to 35 percent; of width and thickness indicated; formulated from neoprene urethane or PVC.

B. Preformed Control-Joint Gaskets: Made from styrene-butadiene-rubber compound, complying with ASTM D 2000, Designation M2AA-805 PVC, complying with ASTM D 2287, Type PVC-65406 and designed to fit standard sash block and to maintain lateral stability in masonry wall; size and configuration as indicated.

C. Bond-Breaker Strips: Asphalt-saturated felt complying with ASTM D 226/D 226M, Type I (No. 15 asphalt felt).

D. Weep/Cavity Vent Products: Use one of the following unless otherwise indicated:

1. Mesh Weep/Vent: Free-draining mesh; made from polyethylene strands, full height and width of head joint and depth 1/8 inch less than depth of outer wythe; in color selected from manufacturer's standard.

a. Products: Subject to compliance with requirements, available manufacturers offering products that may be incorporated into the Work include the following listed manufacturer/product, any deviation from the requirements requires approval by the architect:

1) Advanced Building Products Inc.; Mortar Break Weep Mesh.
2) CavClear/Archovations, Inc.; CavClear Weep Vents.
3) Keene Building Products; Driwall Weep Vents 025.
4) Mortar Net USA, Ltd; Mortar Net Weep Vents.

E. Cavity Drainage Material: Free-draining mesh, made from polymer strands that will not degrade within the wall cavity.

1. Products: Subject to compliance with requirements, available manufacturers offering products that may be incorporated into the Work include the following listed manufacturer/product, any deviation from the requirements requires approval by the architect:

a. Advanced Building Products Inc.; Mortar BreakMortar Break II.
b. CavClear/Archovations, Inc.; CavClear Masonry Mat.
c. Heckmann Building Products, Inc.; Weep-Thru Mortar Deflector.
d. Hohmann & Barnard, Inc; Mortar Trap.
e. Mortar Net USA, Ltd; Mortar Net.
f. Wire-Bond; Cavity NetCavity Net II.

2. Configuration: Provide the following:

a. Strips, full depth of cavity and 10 inches high, with dovetail-shaped notches 7 inches deep that prevent clogging with mortar droppings.

2.11 MASONRY CLEANERS

A. Proprietary Acidic Cleaner: Manufacturer's standard-strength cleaner designed for removing mortar/grout stains, efflorescence, and other new construction stains from new masonry without discoloring or damaging masonry surfaces. Use product expressly approved for intended use by cleaner manufacturer and manufacturer of masonry units being cleaned.

1. Manufacturers: Subject to compliance with requirements, available manufacturers offering products that may be incorporated into the Work include the following listed manufacturer/product, any deviation from the requirements requires approval by the architect:

a. Diedrich Technologies, Inc.; a division of Sandell Construction Solutions.
b. EaCo Chem, Inc.
c. PROSOCO, Inc.

2.12 MORTAR AND GROUT MIXES

A. General: Do not use admixtures, including pigments, air-entraining agents, accelerators, retarders, water-repellent agents, antifreeze compounds, or other admixtures unless otherwise indicated.

1. Do not use calcium chloride in mortar or grout.

a. Allowable Accelerator; Subject to compliance with requirements, available manufacturers offering products that may be incorporated into the Work include, but are not limited to, the following: Accelguard 80.

2. Use portland cement-lime masonry cement or mortar cement mortar unless otherwise indicated.
3. For exterior masonry, use portland cement-lime masonry cement or mortar cement mortar.
4. For reinforced masonry, use portland cement-lime masonry cement or mortar cement mortar.
5. Add cold-weather admixture (if used) at same rate for all mortar that will be exposed to view, regardless of weather conditions, to ensure that mortar color is consistent.

B. Preblended, Dry Mortar Mix: Furnish dry mortar ingredients in form of a preblended mix. Measure quantities by weight to ensure accurate proportions, and thoroughly blend ingredients before delivering to Project site.

C. Mortar for Unit Masonry: Comply with ASTM C 270, Proportion Property Specification. Provide the following types of mortar for applications stated unless another type is indicated or needed to provide required compressive strength of masonry.

1. For masonry below grade or in contact with earth, use Type M.
2. For reinforced masonry, use Type S.
3. For exterior, above-grade, load-bearing and nonload-bearing walls and parapet walls; for interior load-bearing walls; for interior nonload-bearing partitions; and for other applications where another type is not indicated, use Type N.
4. For interior nonload-bearing partitions, Type O may be used instead of Type N.

D. Pigmented Mortar: Use colored cement product or select and proportion pigments with other ingredients to produce color required. Do not add pigments to colored cement products.

1. Pigments shall not exceed 10 percent of portland cement by weight.
2. Pigments shall not exceed 5 percent of masonry cement or mortar cement by weight.
3. Mix to match Architect's sample.
4. Application: Use pigmented mortar for exposed mortar joints with the following units:

a. Decorative CMUs.
b. Cast-stone trim units.

E. Colored-Aggregate Mortar: Produce required mortar color by using colored aggregates and natural color or white cement as necessary to produce required mortar color.

1. Mix to match Architect's sample.
2. Application: Use colored-aggregate mortar for exposed mortar joints with the following units:

a. Decorative CMUs.
b. Cast-stone trim units.

F. Grout for Unit Masonry: Comply with ASTM C 476.

1. Use grout of type indicated or, if not otherwise indicated, of type (fine or coarse) that will comply with TMS 602 for dimensions of grout spaces and pour height.
2. Proportion grout in accordance with ASTM C 476, Table 1 or paragraph 4.2.2 for specified 28-day compressive strength indicated, but not less than 2000 psi.
3. Provide grout with a slump of 8 to 11 inches as measured according to ASTM C 143/C 143M.

PART 3 - EXECUTION

3.1 EXAMINATION

A. Examine conditions, with Installer present, for compliance with requirements for installation tolerances and other conditions affecting performance of the Work.

1. For the record, prepare written report, endorsed by Installer, listing conditions detrimental to performance of the Work.
2. Verify that foundations are within tolerances specified.
3. Verify that reinforcing dowels are properly placed.
4. Verify that substrates are free of substances that impair mortar bond.

B. Before installation, examine rough-in and built-in construction for piping systems to verify actual locations of piping connections.

C. Proceed with installation only after unsatisfactory conditions have been corrected.

3.2 INSTALLATION, GENERAL

A. Thickness: Build cavity and composite walls and other masonry construction to full thickness shown. Build single-wythe walls to actual widths of masonry units, using units of widths indicated.

B. Build chases and recesses to accommodate items specified in this and other Sections.

C. Leave openings for equipment to be installed before completing masonry. After installing equipment, complete masonry to match construction immediately adjacent to opening.

D. Use full-size units without cutting if possible. If cutting is required to provide a continuous pattern or to fit adjoining construction, cut units with motor-driven saws; provide clean, sharp, unchipped edges. Allow units to dry before laying unless wetting of units is specified. Install cut units with cut surfaces and, where possible, cut edges concealed.

E. Select and arrange units for exposed unit masonry to produce a uniform blend of colors and textures. Mix units from several pallets or cubes as they are placed.

F. Matching Existing Masonry: Match coursing, bonding, color, and texture of existing masonry.

G. Wetting of Brick: Wet brick before laying if initial rate of absorption exceeds 30 g/30 sq. in. per minute when tested according to ASTM C 67. Allow units to absorb water so they are damp but not wet at time of laying.

3.3 TOLERANCES

A. Dimensions and Locations of Elements:

1. For dimensions in cross section or elevation, do not vary by more than plus 1/2 inch or minus 1/4 inch.
2. For location of elements in plan, do not vary from that indicated by more than plus or minus 1/2 inch.
3. For location of elements in elevation, do not vary from that indicated by more than plus or minus 1/4 inch in a story height or 1/2 inch total.

B. Lines and Levels:

1. For bed joints and top surfaces of bearing walls, do not vary from level by more than 1/4 inch in 10 feet, or 1/2-inch maximum.
2. For conspicuous horizontal lines, such as lintels, sills, parapets, and reveals, do not vary from level by more than 1/8 inch in 10 feet, 1/4 inch in 20 feet, or 1/2-inch maximum.
3. For vertical lines and surfaces, do not vary from plumb by more than 1/4 inch in 10 feet, 3/8 inch in 20 feet, or 1/2-inch maximum.
4. For conspicuous vertical lines, such as external corners, door jambs, reveals, and expansion and control joints, do not vary from plumb by more than 1/8 inch in 10 feet, 1/4 inch in 20 feet, or 1/2-inch maximum.
5. For lines and surfaces, do not vary from straight by more than 1/4 inch in 10 feet, 3/8 inch in 20 feet, or 1/2-inch maximum.
6. For vertical alignment of exposed head joints, do not vary from plumb by more than 1/4 inch in 10 feet or 1/2-inch maximum.
7. For faces of adjacent exposed masonry units, do not vary from flush alignment by more than 1/16 inch except due to warpage of masonry units within tolerances specified for warpage of units.

C. Joints:

1. For bed joints, do not vary from thickness indicated by more than plus or minus 1/8 inch, with a maximum thickness limited to 1/2 inch.
2. For exposed bed joints, do not vary from bed-joint thickness of adjacent courses by more than 1/8 inch.
3. For head and collar joints, do not vary from thickness indicated by more than plus 3/8 inch or minus 1/4 inch.
4. For exposed head joints, do not vary from thickness indicated by more than plus or minus 1/8 inch. Do not vary from adjacent bed-joint and head-joint thicknesses by more than 1/8 inch.
5. For exposed bed joints and head joints of stacked bond, do not vary from a straight line by more than 1/16 inch from one masonry unit to the next.

3.4 LAYING MASONRY WALLS

A. Lay out walls in advance for accurate spacing of surface bond patterns with uniform joint thicknesses and for accurate location of openings, movement-type joints, returns, and offsets. Avoid using less-than-half-size units, particularly at corners, jambs, and, where possible, at other locations.

B. Bond Pattern for Exposed Masonry: Unless otherwise indicated, lay exposed masonry in running bond; do not use units with less-than-nominal 4-inch horizontal face dimensions at corners or jambs.

C. Lay concealed masonry with all units in a wythe in running bond or bonded by lapping not less than 2 inches. Bond and interlock each course of each wythe at corners. Do not use units with less-than-nominal 4-inch horizontal face dimensions at corners or jambs.

D. Stopping and Resuming Work: Stop work by stepping back units in each course from those in course below; do not tooth. When resuming work, clean masonry surfaces that are to receive mortar, remove loose masonry units and mortar, and wet brick if required before laying fresh masonry.

E. Built-in Work: As construction progresses, build in items specified in this and other Sections. Fill in solidly with masonry around built-in items.

F. Fill space between steel frames and masonry solidly with mortar unless otherwise indicated.

G. Where built-in items are to be embedded in cores of hollow masonry units, place a layer of metal lath, wire mesh, or plastic mesh in the joint below, and rod mortar or grout into core.

H. Fill cores in hollow CMUs with grout 24 inches under bearing plates, beams, lintels, posts, and similar items unless otherwise indicated.

I. Build nonload-bearing interior partitions full height of story to underside of solid floor or roof structure above unless otherwise indicated.

1. Install compressible filler in joint between top of partition and underside of structure above.
2. Fasten partition top anchors to structure above and build into top of partition. Grout cells of CMUs solidly around plastic tubes of anchors and push tubes down into grout to provide 1/2-inch clearance between end of anchor rod and end of tube. Space anchors 48 inches o.c. unless otherwise indicated.
3. Wedge nonload-bearing partitions against structure above with small pieces of tile, slate, or metal. Fill joint with mortar after dead-load deflection of structure above approaches final position.
4. At fire-rated partitions, treat joint between top of partition and underside of structure above to comply with Section 078443 "Joint Firestopping."

3.5 MORTAR BEDDING AND JOINTING

A. Lay CMUs as follows:

1. Bed face shells in mortar and make head joints of depth equal to bed joints.
2. Bed webs in mortar in all courses of piers, columns, and pilasters.
3. Bed webs in mortar in grouted masonry, including starting course on footings.
4. Fully bed entire units, including areas under cells, at starting course on footings where cells are not grouted.
5. Fully bed units and fill cells with mortar at anchors and ties as needed to fully embed anchors and ties in mortar.

B. Lay solid masonry units with completely filled bed and head joints; butter ends with sufficient mortar to fill head joints and shove into place. Do not deeply furrow bed joints or slush head joints.

C. Set stone trim units in full bed of mortar with full vertical joints. Fill dowel, anchor, and similar holes.

1. Clean soiled surfaces with fiber brush and soap powder and rinse thoroughly with clear water.

2. Allow cleaned surfaces to dry before setting.
3. Wet joint surfaces thoroughly before applying mortar.
4. Rake out mortar joints for pointing with sealant.

D. Rake out mortar joints at pre-faced CMUs glazed brick to a uniform depth of 1/4 inch and point with epoxy mortar to comply with epoxy-mortar manufacturer's written instructions.

E. Tool exposed joints slightly concave when thumbprint hard, using a jointer larger than joint thickness unless otherwise indicated.

1. For glazed masonry units, use a nonmetallic jointer 3/4 inch or more in width.

3.6 ANCHORED MASONRY VENEERS

A. Anchor masonry veneers to wall framing and concrete and masonry backup with masonry-veneer anchors to comply with the following requirements:

1. Fasten screw-attached anchors through sheathing to wall framing and to concrete and masonry backup with metal fasteners of type indicated. Use two fasteners unless anchor design only uses one fastener.
2. Embed tie sections connector sections and continuous wire in masonry joints.
3. Locate anchor sections to allow maximum vertical differential movement of ties up and down.
4. Space anchors as indicated, but not more than 18 inches o.c. vertically and 24 inches o.c. horizontally, with not less than one anchor for each 2 sq. ft. of wall area. Install additional anchors within 12 inches of openings and at intervals, not exceeding 8 inches, around perimeter.
5. Space anchors as indicated, but not more than 16 inches o.c. vertically and 25 inches o.c. horizontally, with not less than one anchor for each 2.67 sq. ft. of wall area. Install additional anchors within 12 inches of openings and at intervals, not exceeding 36 inches, around perimeter.
6. Space anchors as indicated, but not more than 18 inches o.c. vertically and horizontally. Install additional anchors within 12 inches of openings and at intervals, not exceeding 24 inches, around perimeter.

B. Provide not less than 2 inches of airspace between back of masonry veneer and face of sheathing insulation.

1. Keep airspace clean of mortar droppings and other materials during construction. Bevel beds away from airspace, to minimize mortar protrusions into airspace. Do not attempt to trowel or remove mortar fins protruding into airspace.

3.7 MASONRY-JOINT REINFORCEMENT

A. General: Install entire length of longitudinal side rods in mortar with a minimum cover of 5/8 inch on exterior side of walls, 1/2 inch elsewhere. Lap reinforcement a minimum of 6 inches.

1. Space reinforcement not more than 16 inches o.c.
2. Space reinforcement not more than 8 inches o.c. in foundation walls and parapet walls.
3. Provide reinforcement not more than 8 inches above and below wall openings and extending 12 inches beyond openings in addition to continuous reinforcement.

B. Interrupt joint reinforcement at control and expansion joints unless otherwise indicated.

C. Provide continuity at wall intersections by using prefabricated T-shaped units.

D. Provide continuity at corners by using prefabricated L-shaped units.

E. Cut and bend reinforcing units as directed by manufacturer for continuity at corners, returns, offsets, column fireproofing, pipe enclosures, and other special conditions.

3.8 ANCHORING MASONRY TO STRUCTURAL STEEL AND CONCRETE

A. Anchor masonry to structural steel and concrete, where masonry abuts or faces structural steel or concrete, to comply with the following:

1. Provide an open space not less than 1/2 inch wide between masonry and structural steel or concrete unless otherwise indicated. Keep open space free of mortar and other rigid materials.
2. Anchor masonry with anchors embedded in masonry joints and attached to structure.
3. Space anchors as indicated, but not more than 24 inches o.c. vertically and 36 inches o.c. horizontally.

3.9 CONTROL AND EXPANSION JOINTS

A. General: Install control- and expansion-joint materials in unit masonry as masonry progresses. Do not allow materials to span control and expansion joints without provision to allow for in-plane wall or partition movement. Install in accordance with Brick Institute of America BIA Tech Note 18A.

1. Control and expansion joint locations shall be as indicated on drawings or as approved by the Architect. Submit to Architect for approval any recommended locations that differ from those shown on drawings prior to proceeding with the work

B. Form control joints in concrete masonry as follows using one of the following methods:

1. Fit bond-breaker strips into hollow contour in ends of CMUs on one side of control joint. Fill resultant core with grout, and rake out joints in exposed faces for application of sealant.
2. Install preformed control-joint gaskets designed to fit standard sash block.
3. Install interlocking units designed for control joints. Install bond-breaker strips at joint. Keep head joints free and clear of mortar, or rake out joint for application of sealant.
4. Install temporary foam-plastic filler in head joints, and remove filler when unit masonry is complete for application of sealant.

C. Provide horizontal, pressure-relieving joints by either leaving an airspace or inserting a compressible filler of width required for installing sealant and backer rod specified in Section 079200 "Joint Sealants," but not less than 3/8 inch.

1. Locate horizontal, pressure-relieving joints beneath shelf angles supporting masonry.

3.10 LINTELS

A. Install steel lintels where indicated.

B. Provide cast stone or masonry lintels where shown and where openings of more than 12 inches for brick-size units and 24 inches for block-size units are shown without structural steel or other supporting lintels.

C. Provide minimum bearing of 8 inches at each jamb unless otherwise indicated.

3.11 FLASHING, WEEP HOLES, AND CAVITY VENTS

A. General: Install embedded flashing and weep holes in masonry at shelf angles, lintels, ledges, other obstructions to downward flow of water in wall, and where indicated. Install cavity vents at shelf angles, ledges, and other obstructions to upward flow of air in cavities, and where indicated.

B. Install flashing as follows unless otherwise indicated:

1. Prepare masonry surfaces so they are smooth and free from projections that could puncture flashing. Where flashing is within mortar joint, place through-wall flashing on sloping bed of mortar and cover with mortar. Before covering with mortar, seal penetrations in flashing with adhesive, sealant, or tape as recommended by flashing manufacturer.
2. At masonry-veneer walls, extend flashing through veneer, across airspace behind veneer, and up face of sheathing at least 8 inches; with upper edge tucked under fluid applied membrane air barrier, lapping at least 4 inches.
3. At lintels and shelf angles, extend flashing a minimum of 6 inches into masonry at each end. At heads and sills, extend flashing 6 inches at ends and turn up not less than 2 inches to form end dams.
4. Interlock end joints of ribbed sheet metal flashing by overlapping ribs not less than 1-1/2 inches or as recommended by flashing manufacturer, and seal lap with elastomeric sealant complying with requirements in Section 079200 "Joint Sealants" for application indicated.
5. Install metal drip edges and sealant stops with ribbed sheet metal flashing by interlocking hemmed edges to form hooked seam. Seal seam with elastomeric sealant complying with requirements in Section 079200 "Joint Sealants" for application indicated.
6. Install metal drip edges beneath flexible flashing at exterior face of wall. Stop flexible flashing 1/2 inch back from outside face of wall, and adhere flexible flashing to top of metal drip edge.
7. Install metal flashing termination beneath flexible flashing at exterior face of wall. Stop flexible flashing 1/2 inch back from outside face of wall, and adhere flexible flashing to top of metal flashing termination.
8. Cut flexible flashing off flush with face of wall after masonry wall construction is completed.

C. Install single-wythe CMU flashing system in bed joints of CMU walls where indicated to comply with manufacturer's written instructions. Install CMU cell pans with upturned edges located below face shells and webs of CMUs above and with weep spouts aligned with face of wall. Install CMU web covers so that they cover upturned edges of CMU cell pans at CMU webs and extend from face shell to face shell.

D. Install reglets and nailers for flashing and other related construction where they are shown to be built into masonry.

E. Install weep holes in exterior wythes and veneers in head joints of first course of masonry immediately above embedded flashing.

1. Use specified weep/cavity vent products or open-head joints to form weep holes.
2. Space weep holes 24 inches o.c. unless otherwise indicated.

F. Place cavity drainage material in cavities airspace behind veneers to comply with configuration requirements for cavity drainage material in "Miscellaneous Masonry Accessories" Article.

G. Install cavity vents in head joints in exterior wythes at spacing indicated. Use specified weep/cavity vent products or open-head joints to form cavity vents.

1. Close cavities off vertically and horizontally with blocking in manner indicated. Install through-wall flashing and weep holes above horizontal blocking.

3.12 REINFORCED UNIT MASONRY INSTALLATION

A. Temporary Formwork and Shores: Construct formwork and shores as needed to support reinforced masonry elements during construction.

1. Construct formwork to provide shape, line, and dimensions of completed masonry as indicated. Make forms sufficiently tight to prevent leakage of mortar and grout. Brace, tie, and support forms to maintain position and shape during construction and curing of reinforced masonry.
2. Do not remove forms and shores until reinforced masonry members have hardened sufficiently to carry their own weight and that of other loads that may be placed on them during construction.

B. Placing Reinforcement: Comply with requirements in TMS 602.

C. Grouting: Do not place grout until entire height of masonry to be grouted has attained enough strength to resist grout pressure.

1. Comply with requirements in TMS 602 for cleanouts and for grout placement, including minimum grout space and maximum pour height.
2. Limit height of vertical grout pours to not more than 60 inches.

3.13 FIELD QUALITY CONTROL

A. Testing and Inspecting: Owner will engage special inspectors to perform tests and inspections and prepare reports. Allow inspectors access to scaffolding and work areas as needed to perform tests and inspections. Retesting of materials that fail to comply with specified requirements shall be done at Contractor's expense.

B. Inspections: Special inspections according to Level B in TMS 402.

1. Begin masonry construction only after inspectors have verified proportions of site-prepared mortar.
2. Place grout only after inspectors have verified compliance of grout spaces and of grades, sizes, and locations of reinforcement.
3. Place grout only after inspectors have verified proportions of site-prepared grout.

C. Testing Prior to Construction: One set of tests.

D. Testing Frequency: One set of tests for each 5000 sq. ft. of wall area or portion thereof.

E. Concrete Masonry Unit Test: For each type of unit provided, according to ASTM C 140 for compressive strength.

F. Mortar Aggregate Ratio Test (Proportion Specification): For each mix provided, according to ASTM C 780.

G. Mortar Test (Property Specification): For each mix provided, according to ASTM C 780.

H. Grout Test (Compressive Strength): For each mix provided, according to ASTM C 1019.

I. Prism Test: For each type of construction provided, according to ASTM C 1314 at 28 days.

3.14 REPAIRING, POINTING, AND CLEANING

A. Remove and replace masonry units that are loose, chipped, broken, stained, or otherwise damaged or that do not match adjoining units. Install new units to match adjoining units; install in fresh mortar, pointed to eliminate evidence of replacement.

B. Pointing: During the tooling of joints, enlarge voids and holes, except weep holes, and completely fill with mortar. Point up joints, including corners, openings, and adjacent construction, to provide a neat, uniform appearance. Prepare joints for sealant application, where indicated.

C. In-Progress Cleaning: Clean unit masonry as work progresses by dry brushing to remove mortar fins and smears before tooling joints.

D. Final Cleaning: After mortar is thoroughly set and cured, clean exposed masonry as follows:

1. Remove large mortar particles by hand with wooden paddles and nonmetallic scrape hoes or chisels.
2. Test cleaning methods on sample wall panel; leave one-half of panel uncleaned for comparison purposes. Obtain Architect's approval of sample cleaning before proceeding with cleaning of masonry.
3. Protect adjacent stone and nonmasonry surfaces from contact with cleaner by covering them with liquid strippable masking agent or polyethylene film and waterproof masking tape.
4. Wet wall surfaces with water before applying cleaners; remove cleaners promptly by rinsing surfaces thoroughly with clear water.
5. Clean brick by bucket-and-brush hand-cleaning method described in BIA Technical Notes 20.
6. Clean concrete masonry by applicable cleaning methods indicated in NCMA TEK 8-4A.
7. Clean masonry with a proprietary acidic cleaner applied according to manufacturer's written instructions.
8. Clean stone trim to comply with stone supplier's written instructions.
9. Clean limestone units to comply with recommendations in ILI's "Indiana Limestone Handbook."

3.15 MASONRY WASTE DISPOSAL

A. Salvageable Materials: Unless otherwise indicated, excess masonry materials are Contractor's property. At completion of unit masonry work, remove from Project site.

B. Waste Disposal as Fill Material: Dispose of clean masonry waste, including excess or soil-contaminated sand, waste mortar, and broken masonry units, by crushing and mixing with fill material as fill is placed.

1. Crush masonry waste to less than 4 inches in each dimension.
2. Mix masonry waste with at least two parts of specified fill material for each part of masonry waste. Fill material is specified in Section 312000 "Earth Moving."
3. Do not dispose of masonry waste as fill within 18 inches of finished grade.

C. Masonry Waste Recycling: Return broken CMUs not used as fill to manufacturer for recycling.

D. Excess Masonry Waste: Remove excess clean masonry waste that cannot be used as fill, as described above or recycled, and other masonry waste, and legally dispose of off Owner's property.

END OF SECTION 042000

SECTION 047200 - CAST STONE MASONRY

PART 1 - GENERAL

1.1 RELATED DOCUMENTS

A. Drawings and general provisions of the Contract, including General and Supplementary Conditions and Division 01 Specification Sections, apply to this Section.

1.2 SUMMARY

A. Section Includes:

1. Cast-stone trim.

a. Window sills.
b. Wall caps.
c. Water tables.

B. Related Sections:

1. Section 042000 "Unit Masonry" for installing cast-stone units in unit masonry.

1.3 ACTION SUBMITTALS

A. Product Data: For each type of product.

1. For cast-stone units, include construction details, material descriptions, dimensions of individual components and profiles, and finishes.

B. LEED Submittals:

1. Product Certificates for Credit MR 5: For products and materials required to comply with requirements for regional materials, certificates indicating location of material manufacturer and point of extraction, harvest, or recovery for each raw material. Include statement indicating distance to Project, cost for each regional material, and fraction by weight that is considered regional.

C. Shop Drawings: Show fabrication and installation details for cast-stone units. Include dimensions, details of reinforcement and anchorages if any, and indication of finished faces.

1. Include building elevations showing layout of units and locations of joints and anchors.

D. Samples for Initial Selection: For colored mortar.

E. Samples for Verification:

1. For each color and texture of cast stone required, 10 inches square in size.
2. For each trim shape required, 10 inches in length.
3. For colored mortar, make Samples using same sand and mortar ingredients to be used on Project.[Label Samples to indicate types and amounts of pigments used.]

1.4 INFORMATIONAL SUBMITTALS

A. Qualification Data: For [manufacturer] [and] [testing agency].

1. Include copies of material test reports for completed projects, indicating compliance of cast stone with ASTM C 1364.

B. Material Test Reports: For each mix required to produce cast stone, based on testing according to ASTM C 1364[, including test for resistance to freezing and thawing].

1. Provide test reports based on testing within previous two years.

1.5 QUALITY ASSURANCE

A. Manufacturer Qualifications: A qualified manufacturer of cast-stone units similar to those indicated for this Project, that has sufficient production capacity to manufacture required units, and is a plant certified by [the Cast Stone Institute] [the Architectural Precast Association] [or] [the Precast/Prestressed Concrete Institute for Group A, Category AT].

B. Testing Agency Qualifications: Qualified according to ASTM E 329 for testing indicated.

C. Mockups: Furnish cast stone for installation in mockups specified in Section 042000 "Unit Masonry."

D. Mockups: Build mockups to verify selections made under Sample submittals and to demonstrate aesthetic effects[and set quality standards for materials and execution].

1. Build mockup of typical wall area as shown on Drawings.

1.6 DELIVERY, STORAGE, AND HANDLING

A. Coordinate delivery of cast stone[with unit masonry work] to avoid delaying the Work[and to minimize the need for on-site storage].

B. Pack, handle, and ship cast-stone units in suitable packs or pallets.

1. Lift with wide-belt slings; do not use wire rope or ropes that might cause staining. Move cast-stone units if required, using dollies with wood supports.
2. Store cast-stone units on wood skids or pallets with nonstaining, waterproof covers, securely tied. Arrange to distribute weight evenly and to prevent damage to units. Ventilate under covers to prevent condensation.

C. Store cementitious materials on elevated platforms, under cover, and in a dry location. Do not use cementitious materials that have become damp.

D. Store mortar aggregates where grading and other required characteristics can be maintained and contamination can be avoided.

1.7 PROJECT CONDITIONS

A. Cold-Weather Requirements: Do not use frozen materials or materials mixed or coated with ice or frost. Do not build on frozen substrates. Comply with cold-weather construction requirements in TMS 602/ACI 530.1/ASCE 6.

1. Cold-Weather Cleaning: Use liquid cleaning methods only when air temperature is 40 deg F and above and will remain so until cast stone has dried, but no fewer than seven days after completing cleaning.

B. Hot-Weather Requirements: Comply with hot-weather construction requirements in TMS 602/ACI 530.1/ASCE 6.

PART 2 - PRODUCTS

2.1 MANUFACTURERS

A. Source Limitations for Cast Stone: Obtain cast-stone units from single source from single manufacturer.

B. Source Limitations for Mortar Materials: Obtain mortar ingredients of a uniform quality, including color, from one manufacturer for each cementitious component and from one source or producer for each aggregate.

2.2 CAST-STONE UNITS

A. Cast-Stone Units: Comply with ASTM C 1364.

1. Units shall be manufactured using the [vibrant dry tamp] [wet-cast] method.

B. Fabricate units with sharp arris and accurately reproduced details, with indicated texture on all exposed surfaces unless otherwise indicated.

1. Slope exposed horizontal surfaces 1:12 to drain unless otherwise indicated.
2. Provide raised fillets at backs of sills and at ends indicated to be built into jambs.
3. Provide drips on projecting elements unless otherwise indicated.

C. Fabrication Tolerances:

1. Variation in Cross Section: Do not vary from indicated dimensions by more than 1/8 inch.
2. Variation in Length: Do not vary from indicated dimensions by more than 1/360 of the length of unit or 1/8 inch, whichever is greater, but in no case by more than 1/4 inch.
3. Warp, Bow, and Twist: Not to exceed 1/360 of the length of unit or 1/8 inch, whichever is greater.

4. Location of Grooves, False Joints, Holes, Anchorages, and Similar Features: Do not vary from indicated position by more than 1/8 inch on formed surfaces of units and 3/8 inch on unformed surfaces.

D. Cure Units as Follows:

1. Cure units in enclosed, moist curing room at 95 to 100 percent relative humidity and temperature of 100 deg F for 12 hours or 70 deg F for 16 hours.
2. Keep units damp and continue curing to comply with one of the following:

a. No fewer than five days at mean daily temperature of 70 deg F or above.

E. Acid etch units after curing to remove cement film from surfaces to be exposed to view.

F. Colors and Textures: As selected by Architect from manufacturer's full range.

G. Colors and Textures: Provide units with fine-grained texture and buff color resembling smooth-finished Indiana limestone.

2.3 MORTAR MATERIALS

A. Provide mortar materials that comply with Section 042000 "Unit Masonry."

B. Portland Cement: ASTM C 150/C 150M, Type I or II, except Type III may be used for cold-weather construction. Provide natural color or white cement as required to produce mortar color indicated.

C. Hydrated Lime: ASTM C 207, Type S.

D. Portland Cement-Lime Mix: Packaged blend of portland cement and hydrated lime containing no other ingredients.

E. Mortar Pigments: Natural and synthetic iron oxides and chromium oxides, compounded for use in mortar mixes and complying with ASTM C 979/C 979M. Use only pigments with a record of satisfactory performance in masonry mortar.

1. Products: Subject to compliance with requirements, provide one of the following:

a. Davis Colors; True Tone Mortar Colors.
b. Lanxess Corporation; Bayferrox Iron Oxide Pigments.
c. Solomon Colors, Inc.; SGS Mortar Colors.

F. Colored Cement Product: Packaged blend made from portland cement and hydrated lime masonry cement or mortar cement and mortar pigments, all complying with specified requirements, and containing no other ingredients.

1. Colored Portland Cement-Lime Mix:

a. Products: Subject to compliance with requirements, provide one of the following:

1) Essroc, Italcementi Group; Riverton Portland Cement Lime Custom Color.
2) Holcim; Rainbow Mortamix Custom Color Cement/Lime.

3) Lafarge North America Inc.; Eaglebond Portland & Lime.
4) Lehigh Hanson, Inc.; Lehigh Custom Color Portland/Lime Cement.

2. Colored Masonry Cement:

a. Products: Subject to compliance with requirements, [provide the following] [provide one of the following] [available products that may be incorporated into the Work include, but are not limited to, the following]:

1) Cemex S.A.B. de C.V.; Richcolor Masonry Cement.
2) Essroc, Italcementi Group; Brixment-in-Color Flamingo Color Masonry Cement.
3) Holcim; Rainbow Mortamix Custom Color Masonry Cement.
4) Lafarge North America Inc.; U.S. Cement Custom Color Masonry Cement.
5) Lehigh Hanson, Inc.; Lehigh Custom Color Masonry Cement.
6) Insert manufacturer's name; product name or designation.

3. Formulate blend as required to produce color indicated or, if not indicated, as selected from manufacturer's standard colors.
4. Pigments shall not exceed 10 percent of portland cement by weight.
5. Pigments shall not exceed 5 percent of or mortar cement by weight.

G. Aggregate for Mortar: ASTM C 144.

1. For mortar that is exposed to view, use washed aggregate consisting of natural sand or crushed stone.
2. For joints less than 1/4 inch thick, use aggregate graded with 100 percent passing the No. 16 sieve.
3. White-Mortar Aggregates: Natural white sand or crushed white stone.
4. Colored Aggregates: Natural sand or crushed stone of color necessary to produce required mortar color.

H. Water: Potable.

2.4 ACCESSORIES

A. Anchors: Type and size indicated, fabricated from Type 304 stainless steel complying with ASTM A 240/A 240M, ASTM A 276, or ASTM A 666.

B. Dowels: 1/2-inch- diameter round bars, fabricated from Type 304 stainless steel complying with ASTM A 240/A 240M, ASTM A 276, or ASTM A 666.

C. Proprietary Acidic Cleaner: Manufacturer's standard-strength cleaner designed for removing mortar/grout stains, efflorescence, and other new construction stains from new masonry without discoloring or damaging masonry surfaces. Use product expressly approved for intended use by cast-stone manufacturer and expressly approved by cleaner manufacturer for use on cast stone and adjacent masonry materials.

1. Manufacturers: Subject to compliance with requirements, provide products by one of the following:

a. Diedrich Technologies, Inc.

b. EaCo Chem, Inc.
c. ProSoCo, Inc.

2.5 MORTAR MIXES

A. Comply with requirements in Section 042000 "Unit Masonry" for mortar mixes.

B. Do not use admixtures including pigments, air-entraining agents, accelerators, retarders, water-repellent agents, antifreeze compounds, or other admixtures unless otherwise indicated.

1. Do not use calcium chloride in mortar or grout.
2. Use portland cement-lime or mortar cement mortar unless otherwise indicated.

C. Comply with ASTM C 270, Proportion Specification.

1. For setting mortar, use Type S.
2. For pointing mortar, use Type N.

D. Pigmented Mortar: Use colored cement product[or select and proportion pigments with other ingredients to produce color required. Do not add pigments to colored cement products].

1. Pigments shall not exceed 10 percent of portland cement by weight.
2. Pigments shall not exceed 5 percent of mortar cement by weight.
3. Mix to match Architect's sample.
4. Application: Use pigmented mortar for exposed mortar joints.

E. Colored-Aggregate Mortar: Produce required mortar color by using colored aggregates and natural color or white cement as necessary to produce required mortar color.

1. Mix to match Architect's sample.
2. Application: Use colored-aggregate mortar for exposed mortar joints.

PART 3 - EXECUTION

3.1 EXAMINATION

A. Examine substrates and conditions, with Installer present, for compliance with requirements for installation tolerances and other conditions affecting performance of the Work.

B. Proceed with installation only after unsatisfactory conditions have been corrected.

3.2 SETTING CAST STONE IN MORTAR

A. Set cast stone as indicated on Drawings. Set units accurately in locations indicated, with edges and faces aligned according to established relationships and indicated tolerances.

1. Install anchors, supports, fasteners, and other attachments indicated or necessary to secure units in place.

2. Coordinate installation of cast stone with installation of flashing specified in other Sections.

B. Wet joint surfaces thoroughly before applying mortar or setting in mortar.

C. Set units in full bed of mortar with full head joints unless otherwise indicated.

1. Set units with joints [1/4 to 3/8 inch] [3/8 to 1/2 inch] <Insert dimension> wide unless otherwise indicated.
2. Build anchors and ties into mortar joints as units are set.
3. Fill dowel holes and anchor slots with mortar.
4. Fill collar joints solid as units are set.
5. Build concealed flashing into mortar joints as units are set.
6. Keep head joints in copings and between other units with exposed horizontal surfaces open to receive sealant.
7. Keep joints at shelf angles open to receive sealant.

D. Rake out joints for pointing with mortar to depths of not less than 3/4 inch. Rake joints to uniform depths with square bottoms and clean sides. Scrub faces of units to remove excess mortar as joints are raked.

E. Point mortar joints by placing and compacting mortar in layers not greater than 3/8 inch. Compact each layer thoroughly and allow it to become thumbprint hard before applying next layer.

F. Tool exposed joints slightly concave when thumbprint hard. Use a smooth plastic jointer larger than joint thickness.

G. Rake out joints for pointing with sealant to depths of not less than 3/4 inch. Scrub faces of units to remove excess mortar as joints are raked.

H. Point joints with sealant to comply with applicable requirements in Section 079200 "Joint Sealants."

1. Prime cast-stone surfaces to receive sealant and install compressible backer rod in joints before applying sealant unless otherwise indicated.

I. Provide sealant joints at head joints of copings and other horizontal surfaces; at expansion, control, and pressure-relieving joints; and at locations indicated.

1. Keep joints free of mortar and other rigid materials.
2. Build in compressible foam-plastic joint fillers where indicated.
3. Form joint of width indicated, but not less than [3/8 inch] [1/2 inch] <Insert dimension>.
4. Prime cast-stone surfaces to receive sealant and install compressible backer rod in joints before applying sealant unless otherwise indicated.
5. Prepare and apply sealant of type and at locations indicated to comply with applicable requirements in Section 079200 "Joint Sealants."

3.3 SETTING ANCHORED CAST STONE WITH SEALANT-FILLED JOINTS

A. Set cast stone as indicated on Drawings. Set units accurately in locations indicated, with edges and faces aligned according to established relationships and indicated tolerances.

1. Install anchors, supports, fasteners, and other attachments indicated or necessary to secure units in place.
2. Shim and adjust anchors, supports, and accessories to set cast stone in locations indicated with uniform joints.

B. Keep cavities open where unfilled space is indicated between back of cast-stone units and backup wall; do not fill cavities with mortar or grout.

C. Fill anchor holes with sealant.

1. Where dowel holes occur at pressure-relieving joints, provide compressible material at ends of dowels.

D. Set cast stone supported on clip or continuous angles on resilient setting shims. Use material of thickness required to maintain uniform joint widths. Hold shims back from face of cast stone a distance at least equal to width of joint.

E. Keep joints free of mortar and other rigid materials. Remove temporary shims and spacers from joints after anchors and supports are secured in place and cast-stone units are anchored. Do not begin sealant installation until temporary shims and spacers are removed.

1. Form open joint of width indicated, but not less than [3/8 inch] [1/2 inch] <Insert dimension>.

F. Prime cast-stone surfaces to receive sealant and install compressible backer rod in joints before applying sealant unless otherwise indicated.

G. Prepare and apply sealant of type and at locations indicated to comply with applicable requirements in Section 079200 "Joint Sealants."

3.4 INSTALLATION TOLERANCES

A. Variation from Plumb: Do not exceed 1/8 inch in 10 feet, 1/4 inch in 20 feet, or 1/2 inch maximum.

B. Variation from Level: Do not exceed 1/8 inch in 10 feet, 1/4 inch in 20 feet, or 1/2 inch maximum.

C. Variation in Joint Width: Do not vary joint thickness more than 1/8 inch in 36 inches or one-fourth of nominal joint width, whichever is less.

D. Variation in Plane between Adjacent Surfaces (Lipping): Do not vary from flush alignment with adjacent units or adjacent surfaces indicated to be flush with units by more than 1/16 inch, except where variation is due to warpage of units within tolerances specified.

3.5 ADJUSTING AND CLEANING

A. Remove and replace stained and otherwise damaged units and units not matching approved Samples. Cast stone may be repaired if methods and results are approved by Architect.

B. Replace units in a manner that results in cast stone matching approved Samples, complying with other requirements, and showing no evidence of replacement.

C. Final Cleaning: After mortar is thoroughly set and cured, clean exposed cast stone as follows:

1. Remove large mortar particles by hand with wooden paddles and nonmetallic scrape hoes or chisels.
2. Test cleaning methods on sample; leave one sample uncleaned for comparison purposes. Obtain Architect's approval of sample cleaning before proceeding with cleaning of cast stone.
3. Protect adjacent surfaces from contact with cleaner by covering them with liquid strippable masking agent or polyethylene film and waterproof masking tape.
4. Wet surfaces with water before applying cleaners; remove cleaners promptly by rinsing thoroughly with clear water.
5. Clean cast stone by bucket-and-brush hand-cleaning method described in BIA Technical Notes 20.
6. Clean cast stone with proprietary acidic cleaner applied according to manufacturer's written instructions.

END OF SECTION 047200

SECTION 051200 - STRUCTURAL STEEL FRAMING

1.1 RELATED DOCUMENTS

A. Drawings and general provisions of the Contract, including General and Supplementary Conditions and Division 01 Specification Sections, apply to this Section.

1.2 SUMMARY

A. Section Includes:

1. Structural steel.
2. Shear stud connectors.
3. Shrinkage-resistant grout.

B. Related Requirements:

1. Section 051213 "Architecturally Exposed Structural Steel Framing" for additional requirements for architecturally exposed structural steel.
2. Section 053100 "Steel Decking" for field installation of shear stud connectors through deck.
3. Section 055000 "Metal Fabrications" for steel lintels and shelf angles not attached to structural-steel frame] [miscellaneous steel fabrications and other steel items not defined as structural steel.
4. Section 099113 "Exterior Painting" and Section 099123 "Interior Painting"] [and] Section 099600 "High-Performance Coatings" for painting requirements.
5. Section 133419 "Metal Building Systems" for structural steel.

1.3 DEFINITIONS

A. Structural Steel: Elements of the structural frame indicated on Drawings and as described in ANSI/AISC 303.

1.4 COORDINATION

A. Coordinate selection of shop primers with topcoats to be applied over them. Comply with paint and coating manufacturers' written recommendations to ensure that shop primers and topcoats are compatible with one another.

B. Coordinate installation of anchorage items to be embedded in or attached to other construction without delaying the Work. Provide setting diagrams, sheet metal templates, instructions, and directions for installation.

1.5 PREINSTALLATION MEETINGS

A. Preinstallation Conference: Conduct conference at Project site

1.6 ACTION SUBMITTALS

A. Product Data:

1. Structural-steel materials.
2. High-strength, bolt-nut-washer assemblies.

3. Shear stud connectors.
4. Anchor rods.
5. Threaded rods.
6. Shop primer.
7. Galvanized-steel primer.
8. Galvanized repair paint.
9. Shrinkage-resistant grout.

B. Shop Drawings: Show fabrication of structural-steel components.

1. Include details of cuts, connections, splices, camber, holes, and other pertinent data.
2. Include embedment Drawings.
3. Indicate welds by standard AWS symbols, distinguishing between shop and field welds, and show size, length, and type of each weld. Show backing bars that are to be removed and supplemental fillet welds where backing bars are to remain.
4. Indicate type, size, and length of bolts, distinguishing between shop and field bolts. Identify high-strength bolted connections.
5. Identify demand-critical welds.
6. Identify members not to be shop primed.

C. Welding Procedure Specifications (WPSs) and Procedure Qualification Records (PQRs): Provide in accordance with AWS D1.1/D1.1M for each welded joint whether prequalified or qualified by testing including the following:

1. Power source (constant current or constant voltage).
2. Electrode manufacturer and trade name, for demand-critical welds.

D. Delegated-Design Submittal: For structural-steel connections indicated on Drawings to comply with design loads, include analysis data signed and sealed by the qualified professional engineer responsible for their preparation.

1.7 INFORMATIONAL SUBMITTALS

A. Qualification Data: For Installer, fabricator, testing agency.

B. Welding certificates.

C. Paint Compatibility Certificates: From manufacturers of topcoats applied over shop primers, certifying that shop primers are compatible with topcoats.

D. Mill test reports for structural-steel materials, including chemical and physical properties.

E. Product Test Reports: For the following:

1. Bolts, nuts, and washers, including mechanical properties and chemical analysis.
2. Direct-tension indicators.
3. Tension-control, high-strength, bolt-nut-washer assemblies.
4. Shear stud connectors.

F. Survey of existing conditions.

G. Source quality-control reports.

H. Field quality-control reports.

1.8 QUALITY ASSURANCE

A. Fabricator Qualifications: A qualified fabricator that participates in the AISC Quality Certification Program and is designated an AISC-Certified Plant, Category BU or is accredited by the IAS Fabricator Inspection Program for Structural Steel (Acceptance Criteria 172).

B. Installer Qualifications: A qualified Installer who participates in the AISC Quality Certification Program and is designated an AISC-Certified Erector, Category ACSE.

C. Welding Qualifications: Qualify procedures and personnel in accordance with AWS D1.1/D1.1M.

1. Welders and welding operators performing work on bottom-flange, demand-critical welds shall pass the supplemental welder qualification testing, as required by AWS D1.8/D1.8M. FCAW-S and FCAW-G shall be considered separate processes for welding personnel qualification.

1.9 DELIVERY, STORAGE, AND HANDLING

A. Store materials to permit easy access for inspection and identification. Keep steel members off ground and spaced by using pallets, dunnage, or other supports and spacers. Protect steel members and packaged materials from corrosion and deterioration.

1. Do not store materials on structure in a manner that might cause distortion, damage, or overload to members or supporting structures. Repair or replace damaged materials or structures as directed.

B. Store fasteners in a protected place in sealed containers with manufacturer's labels intact.

1. Fasteners may be repackaged provided Owner's testing and inspecting agency observes repackaging and seals containers.
2. Clean and relubricate bolts and nuts that become dry or rusty before use.
3. Comply with manufacturers' written recommendations for cleaning and lubricating ASTM F3125/F3125M, Grade F1852 bolt assemblies and for retesting bolt assemblies after lubrication.

PART 2 - PRODUCTS

2.1 PERFORMANCE REQUIREMENTS

A. Comply with applicable provisions of the following specifications and documents:

1. ANSI/AISC 303.
2. ANSI/AISC 341.
3. ANSI/AISC 360.
4. RCSC's "Specification for Structural Joints Using High-Strength Bolts."

B. Connection Design Information:

1. Option 3 and 3A: Design connections in accordance with ANSI/AISC 303 by fabricator's qualified professional engineer. Member reinforcement at connections is indicated on Drawings.

a. Use Load and Resistance Factor Design; data are given at factored-load level

C. Shear and Moment Connections: Those connections not design by the project engineer shall be designed by the Fabricator for the shears and moments indicated on the Drawings. All loads shown on the Drawings are at ultimate level to be used in the LRFD method.

D. Construction: Combined system of moment frame and shear walls

2.2 STRUCTURAL-STEEL MATERIALS

A. W-Shapes: ASTM A992/A992M

B. Channels, Angles-Shapes: ASTM A36/A36M

C. Plate and Bar: ASTM A36/A36M

D. Cold-Formed Hollow Structural Sections: ASTM A500/A500M, Grade B

E. Welding Electrodes: Comply with AWS requirements.

2.3 BOLTS AND CONNECTORS

A. High-Strength A325 Bolts, Nuts, and Washers: ASTM F3125/F3125M, Grade A325 (Grade A325M), Type 1, heavy-hex steel structural bolts; ASTM A563, Grade DH (ASTM A563M, Class 10S), heavy-hex carbon-steel nuts; and ASTM F436/F436M, Type 1, hardened carbon-steel washers; all with plain finish.

B. Tension-Control, High-Strength Bolt-Nut-Washer Assemblies: ASTM F3125/F3125M, Grade F1852, Type 1, heavy-hex head assemblies, consisting of steel structural bolts with splined ends; ASTM A563, Grade DH (ASTM A563M, Class 10S), heavy-hex carbon-steel nuts; and ASTM F436/F436M, Type 1, hardened carbon-steel washers.

1. Finish: Plain

C. Shear Stud Connectors: ASTM A108, AISI C-1015 through C-1020, headed-stud type, cold-finished carbon steel; AWS D1.1/D1.1M, Type B.

2.4 RODS

A. Unheaded Anchor Rods: ASTM F1554, Grade 36

1. Configuration: Straight
2. Nuts: ASTM A563 (ASTM A563M) heavy-hex carbon steel.
3. Plate Washers: ASTM A36/A36M carbon steel.
4. Washers: ASTM F436 (ASTM F436M), Type 1, hardened carbon steel.
5. Finish: Plain

B. Threaded Rods: ASTM A36/A36M.

1. Nuts: ASTM A 63 (ASTM A563M) hex carbon steel.
2. Washers: ASTM F436 (ASTM F436M), Type 1, hardened carbon steel.
3. Finish: Plain.

2.5 PRIMER

A. Steel Primer:

1. Fabricator's standard lead- and chromate-free, nonasphaltic, rust-inhibiting primer complying with MPI#79 and compatible with topcoat.

2.6 SHRINKAGE-RESISTANT GROUT

A. Nonmetallic, Shrinkage-Resistant Grout: ASTM C1107/C1107M, factory-packaged, nonmetallic aggregate grout, noncorrosive and nonstaining, mixed with water to consistency suitable for application and a 30-minute working time.

2.7 FABRICATION

A. Structural Steel: Fabricate and assemble in shop to greatest extent possible. Fabricate in accordance with ANSI/AISC 303 and to ANSI/AISC 360.

1. Camber structural-steel members where indicated.
2. Fabricate beams with rolling camber up.
3. Identify high-strength structural steel in accordance with ASTM A6/A6M and maintain markings until structural-steel framing has been erected.
4. Mark and match-mark materials for field assembly.
5. Complete structural-steel assemblies, including welding of units, before starting shop-priming operations.

B. Thermal Cutting: Perform thermal cutting by machine to greatest extent possible.

1. Plane thermally cut edges to be welded to comply with requirements in AWS D1.1/D1.1M.

C. Bolt Holes: Cut, drill, or punch standard bolt holes perpendicular to metal surfaces.

D. Finishing: Accurately finish ends of columns and other members transmitting bearing loads.

E. Cleaning: Clean and prepare steel surfaces that are to remain unpainted in accordance with SSPC-SP 1.

F. Shear Stud Connectors: Prepare steel surfaces as recommended by manufacturer of shear connectors. Weld using automatic end welding of headed-stud shear connectors in accordance with AWS D1.1/D1.1M and manufacturer's written instructions.

G. Holes: Provide holes required for securing other work to structural steel and for other work to pass through steel members.

1. Cut, drill, or punch holes perpendicular to steel surfaces. Do not thermally cut bolt holes or enlarge holes by burning.
2. Baseplate Holes: Cut, drill, mechanically thermal cut, or punch holes perpendicular to steel surfaces.
3. Weld threaded nuts to framing and other specialty items indicated to receive other work.

2.8 SHOP CONNECTIONS

A. High-Strength Bolts: Shop install high-strength bolts in accordance with RCSC's "Specification for Structural Joints Using High-Strength Bolts" for type of bolt and type of joint specified.

1. Joint Type: Snug tightened

B. Weld Connections: Comply with AWS D1.1/D1.1M for tolerances, appearances, welding procedure specifications, weld quality, and methods used in correcting welding work.

1. Assemble and weld built-up sections by methods that maintain true alignment of axes without exceeding tolerances in ANSI/AISC 303 for mill material.

2.9 GALVANIZING

A. Hot-Dip Galvanized Finish: Apply zinc coating by the hot-dip process to structural steel in accordance with ASTM A123/A123M.

1. Fill vent and drain holes that are exposed in the finished Work unless they function as weep holes, by plugging with zinc solder and filing off smooth.
2. Galvanize lintels attached to structural-steel frame and located in exterior walls.

2.10 SHOP PRIMING

A. Shop prime steel surfaces, except the following:

1. Surfaces embedded in concrete or mortar. Extend priming of partially embedded members to a depth of 2 inches (50 mm).
2. Surfaces to be field welded.
3. Surfaces to receive sprayed fire-resistive materials (applied fireproofing).
4. Galvanized surfaces
5. Surfaces enclosed in interior construction.

B. Surface Preparation of Steel: Clean surfaces to be painted. Remove loose rust and mill scale and spatter, slag, or flux deposits. Prepare surfaces in accordance with the following specifications and standards:

1. SSPC-SP 2.

C. Surface Preparation of Galvanized Steel: Prepare galvanized-steel surfaces for shop priming by thoroughly cleaning steel of grease, dirt, oil, flux, and other foreign matter, and treating with etching cleaner

D. Priming: Immediately after surface preparation, apply primer in accordance with manufacturer's written instructions and at rate recommended by SSPC to provide a minimum dry film thickness of 1.5 mils (0.038 mm). Use priming methods that result in full coverage of joints, corners, edges, and exposed surfaces.

1. Stripe paint corners, crevices, bolts, welds, and sharp edges.
2. Apply two coats of shop paint to surfaces that are inaccessible after assembly or erection. Change color of second coat to distinguish it from first.

2.11 SOURCE QUALITY CONTROL

A. Testing Agency: Owner will engage a qualified testing agency to perform shop tests and inspections.

1. Allow testing agency access to places where structural-steel work is being fabricated or produced to perform tests and inspections.
2. Bolted Connections: Inspect shop-bolted connections in accordance with RCSC's "Specification for Structural Joints Using High-Strength Bolts."

3. Welded Connections: Visually inspect shop-welded connections in accordance with AWS D1.1/D1.1M and the following inspection procedures, at testing agency's option:

a. Liquid Penetrant Inspection: ASTM E165/E165M.

b. Magnetic Particle Inspection: ASTM E709; performed on root pass and on finished weld. Cracks or zones of incomplete fusion or penetration are not accepted.

c. Ultrasonic Inspection: ASTM E164.

d. Radiographic Inspection: ASTM E94/E94M.

4. In addition to visual inspection, test and inspect shop-welded shear stud connectors in accordance with requirements in AWS D1.1/D1.1M for stud welding and as follows:

a. Perform bend tests if visual inspections reveal either a less-than-continuous 360-degree flash or welding repairs to any shear stud connector.

b. Conduct tests in accordance with requirements in AWS D1.1/D1.1M on additional shear stud connectors if weld fracture occurs on shear stud connectors already tested.

5. Prepare test and inspection reports.

PART 3 - EXECUTION

3.1 EXAMINATION

A. Verify, with certified steel erector present, elevations of concrete- and masonry-bearing surfaces and locations of anchor rods, bearing plates, and other embedments for compliance with requirements.

1. Prepare a certified survey of existing conditions. Include bearing surfaces, anchor rods, bearing plates, and other embedments showing dimensions, locations, angles, and elevations.

B. Proceed with installation only after unsatisfactory conditions have been corrected.

3.2 PREPARATION

A. Provide temporary shores, guys, braces, and other supports during erection to keep structural steel secure, plumb, and in alignment against temporary construction loads and loads equal in

intensity to design loads. Remove temporary supports when permanent structural steel, connections, and bracing are in place unless otherwise indicated on Drawings.

1. Do not remove temporary shoring supporting composite deck construction and structural-steel framing until cast-in-place concrete has attained its design compressive strength.

3.3 ERECTION

A. Set structural steel accurately in locations and to elevations indicated and in accordance with ANSI/AISC 303 and ANSI/AISC 360.

B. Baseplates Bearing Plates and Leveling Plates: Clean concrete- and masonry-bearing surfaces of bond-reducing materials, and roughen surfaces prior to setting plates. Clean bottom surface of plates.

1. Set plates for structural members on wedges, shims, or setting nuts as required.
2. Weld plate washers to top of baseplate.
3. Snug-tighten anchor rods after supported members have been positioned and plumbed. Do not remove wedges or shims but, if protruding, cut off flush with edge of plate before packing with grout.
4. Promptly pack shrinkage-resistant grout solidly between bearing surfaces and plates, so no voids remain. Neatly finish exposed surfaces; protect grout and allow to cure. Comply with manufacturer's written installation instructions for grouting.

C. Maintain erection tolerances of structural steel within ANSI/AISC 303.

D. Align and adjust various members that form part of complete frame or structure before permanently fastening. Before assembly, clean bearing surfaces and other surfaces that are in permanent contact with members. Perform necessary adjustments to compensate for discrepancies in elevations and alignment.

1. Level and plumb individual members of structure. Slope roof framing members to slopes indicated on Drawings.
2. Make allowances for difference between temperature at time of erection and mean temperature when structure is completed and in service.

E. Splice members only where indicated.

F. Do not use thermal cutting during erection.

G. Do not enlarge unfair holes in members by burning or using drift pins. Ream holes that must be enlarged to admit bolts.

3.4 FIELD CONNECTIONS

A. High-Strength Bolts: Install high-strength bolts in accordance with RCSC's "Specification for Structural Joints Using High-Strength Bolts" for bolt and joint type specified.

1. Joint Type: Snug tightened

B. Weld Connections: Comply with AWS D1.1/D1.1M for tolerances, appearances, welding procedure specifications, weld quality, and methods used in correcting welding work.

1. Comply with ANSI/AISC 303 and ANSI/AISC 360 for bearing, alignment, adequacy of temporary connections, and removal of paint on surfaces adjacent to field welds.
2. Assemble and weld built-up sections by methods that maintain true alignment of axes without exceeding tolerances in ANSI/AISC 303 for mill material.

3.5 FIELD QUALITY CONTROL

A. Special Inspections: Owner will engage a special inspector to perform the following special inspections:

1. Verify structural-steel materials and inspect steel frame joint details.
2. Verify weld materials and inspect welds.
3. Verify connection materials and inspect high-strength bolted connections.

B. Testing Agency: Owner will engage a qualified testing agency to perform tests and inspections.

1. Bolted Connections: Inspect bolted connections in accordance with RCSC's "Specification for Structural Joints Using High-Strength Bolts."

2. Welded Connections: Visually inspect field welds in accordance with AWS D1.1/D1.1M.

a. In addition to visual inspection, test and inspect field welds in accordance with AWS D1.1/D1.1M and the following inspection procedures, at testing agency's option:

1) Liquid Penetrant Inspection: ASTM E165/E165M.
2) Magnetic Particle Inspection: ASTM E709; performed on root pass and on finished weld. Cracks or zones of incomplete fusion or penetration are not accepted.
3) Ultrasonic Inspection: ASTM E164.
4) Radiographic Inspection: ASTM E94/E94M.

3.6 PROTECTION

A. Galvanized Surfaces: Clean areas where galvanizing is damaged or missing, and repair galvanizing to comply with ASTM A780/A780M.

B. Touchup Painting: Immediately after erection, clean exposed areas where primer is damaged or missing, and paint with the same material as used for shop painting to comply with SSPC-PA 1 for touching up shop-painted surfaces.

1. Clean and prepare surfaces by SSPC-SP 2 hand-tool cleaning or SSPC-SP 3 power-tool cleaning.

C. Touchup Painting: Cleaning and touchup painting are specified in Section 099113 "Exterior Painting”

END OF SECTION 051200

SECTION 052100 - STEEL JOIST FRAMING

PART 1 - GENERAL

1.1 RELATED DOCUMENTS

A. Drawings and general provisions of the Contract, including General and Supplementary Conditions and Division 01 Specification Sections, apply to this Section.

1.2 SUMMARY

A. Section Includes:

1. K-series steel joists.
2. Joist accessories.

B. Related Requirements:

1. Section 033000 "Cast-in-Place Concrete" for installing bearing plates in concrete.

1.3 DEFINITIONS

A. SJI's "Specifications": Steel Joist Institute's "Standard Specifications, Load Tables and Weight Tables for Steel Joists and Joist Girders."

1.4 ACTION SUBMITTALS

A. Product Data: For each type of joist, accessory, and product.

B. Shop Drawings:

1. Include layout, designation, number, type, location, and spacing of joists.
2. Include joining and anchorage details; bracing, bridging, and joist accessories; splice and connection locations and details; and attachments to other construction.
3. Indicate locations and details of bearing plates to be embedded in other construction.

1.5 INFORMATIONAL SUBMITTALS

A. Qualification Data: For manufacturer

B. Welding certificates.

C. Manufacturer certificates.

D. Field quality-control reports.

1.6 QUALITY ASSURANCE

A. Manufacturer Qualifications: A manufacturer certified by SJI to manufacture joists complying with applicable standard specifications and load tables in SJI's "Specifications."

1. Manufacturer's responsibilities include providing professional engineering services for designing special joists to comply with performance requirements.

B. Welding Qualifications: Qualify field-welding procedures and personnel according to AWS D1.1/D1.1M, "Structural Welding Code - Steel."

1.7 DELIVERY, STORAGE, AND HANDLING

A. Deliver, store, and handle joists as recommended in SJI's "Specifications."

B. Protect joists from corrosion, deformation, and other damage during delivery, storage, and handling.

1.8 SEQUENCING

A. Deliver steel bearing plates to be built into cast-in-place concrete construction.

PART 2 - PRODUCTS

2.1 K-SERIES STEEL JOISTS

A. Manufacture steel joists of type indicated according to "Standard Specification for Open Web Steel Joists, K-Series" in SJI's "Specifications," with steel-angle top- and bottom-chord members, underslung ends, and parallel top chord.

1. Joist Type: K-series steel joists

B. Provide holes in chord members for connecting and securing other construction to joists.

C. Top-Chord Extensions: Extend top chords of joists with SJI's Type S top-chord extensions where indicated, complying with SJI's "Specifications."

D. Extended Ends: Extend bearing ends of joists with SJI's Type R extended ends where indicated, complying with SJI's "Specifications."

E. Camber joists according to SJI's "Specifications."

F. Equip bearing ends of joists with manufacturer's standard beveled ends or sloped shoes if joist slope exceeds 1/4 inch per 12 inches (1:48).

2.2 PRIMERS

A. Primer: SSPC-Paint 15, or manufacturer's standard shop primer complying with performance requirements in SSPC-Paint 15.

B. Primer: Provide shop primer that complies with Section 099113 "Exterior Painting" and Section 099123 "Interior Painting."

2.3 JOIST ACCESSORIES

A. Bridging: Provide bridging anchors and number of rows of horizontal or diagonal bridging of material, size, and type required by SJI's "Specifications" for type of joist, chord size, spacing, and span. Furnish additional erection bridging if required for stability.

B. Fabricate steel bearing plates from ASTM A36/A36M steel with integral anchorages of sizes and thicknesses indicated.

C. Steel bearing plates with integral anchorages are specified in Section 055000 "Metal Fabrications."

D. Furnish ceiling extensions, either extended bottom-chord elements or a separate extension unit of enough strength to support ceiling construction. Extend ends to within 1/2 inch (13 mm) of finished wall surface unless otherwise indicated.

1. Finish: [**Plain, uncoated**] [**Hot-dip zinc coating, ASTM A153/A153M, Class C**] [**Mechanically deposited zinc coating, ASTM B695, Class 50**].

E. High-Strength Bolts, Nuts, and Washers: ASTM F3125/F3125M,Grade A325 (Grade A325M), Type 1, heavy-hex steel structural bolts; ASTM A563, Grade DH, (ASTM A563M, Class 10S) heavy-hex carbon-steel nuts; and ASTM F436/F436M, Type 1, hardened carbon-steel washers.

1. Finish: Plain.

F. Welding Electrodes: Comply with AWS standards.

G. Galvanizing Repair Paint: MPI#18, MPI#19, or SSPC-Paint 20.

H. Furnish miscellaneous accessories including splice plates and bolts required by joist manufacturer to complete joist assembly.

2.4 CLEANING AND SHOP PAINTING

A. Clean and remove loose scale, heavy rust, and other foreign materials from fabricated joists and accessories by hand-tool cleaning, SSPC-SP 2.

B. Do not prime paint joists and accessories to receive sprayed fire-resistive materials.

C. Apply one coat of shop primer to joists and joist accessories to be primed to provide a continuous, dry paint film not less than 1 mil (0.025 mm) thick.

D. Shop priming of joists and joist accessories is specified in Section 099113 "Exterior Painting" and Section 099123 "Interior Painting."

PART 3 - EXECUTION

3.1 EXAMINATION

A. Examine supporting substrates, embedded bearing plates, and abutting structural framing for compliance with requirements for installation tolerances and other conditions affecting performance of the Work.

B. Proceed with installation only after unsatisfactory conditions have been corrected.

3.2 INSTALLATION

A. Do not install joists until supporting construction is in place and secured.

B. Install joists and accessories plumb, square, and true to line; securely fasten to supporting construction according to SJI's "Specifications," joist manufacturer's written instructions, and requirements in this Section.

1. Before installation, splice joists delivered to Project site in more than one piece.
2. Space, adjust, and align joists accurately in location before permanently fastening.
3. Install temporary bracing and erection bridging, connections, and anchors to ensure that joists are stabilized during construction.

C. Field weld joists to supporting steel bearing plates and framework. Coordinate welding sequence and procedure with placement of joists. Comply with AWS requirements and procedures for welding, appearance and quality of welds, and methods used in correcting welding work.

D. Bolt joists to supporting steel framework using carbon-steel bolts.

E. Bolt joists to supporting steel framework using high-strength structural bolts. Comply with RCSC's "Specification for Structural Joints Using ASTM A325 or ASTM A490 Bolts" for high-strength structural bolt installation and tightening requirements.

F. Install and connect bridging concurrently with joist erection, before construction loads are applied. Anchor ends of bridging lines at top and bottom chords if terminating at walls or beams.

3.3 FIELD QUALITY CONTROL

A. Testing Agency: Owner will engage a qualified testing agency to perform tests and inspections.

B. Visually inspect field welds according to AWS D1.1/D1.1M.

1. In addition to visual inspection, test field welds according to AWS D1.1/D1.1M and the following procedures, at testing agency's option:

a. Liquid Penetrant Inspection: ASTM E165/E165M.
b. Magnetic Particle Inspection: ASTM E709.
c. Ultrasonic Testing: ASTM E164.
d. Radiographic Testing: ASTM E94.

C. Visually inspect bolted connections.

D. Prepare test and inspection reports.

3.4 PROTECTION

A. Repair damaged galvanized coatings on galvanized items with galvanized repair paint according to ASTM A780/A780M and manufacturer's written instructions.

B. Touchup Painting: After installation, promptly clean, prepare, and prime or reprime field connections, rust spots, and abraded surfaces of prime-painted joists and accessories.

1. Clean and prepare surfaces by hand-tool cleaning according to SSPC-SP 2 or power-tool cleaning according to SSPC-SP 3.
2. Apply a compatible primer of same type as primer used on adjacent surfaces.

C. Touchup Painting: Cleaning and touchup painting are specified in Section 099113 "Exterior Painting" and Section 099123 "Interior Painting."

END OF SECTION 052100

SECTION 053100 - STEEL DECKING

PART 1 - GENERAL

1.1 RELATED DOCUMENTS

A. Drawings and general provisions of the Contract, including General and Supplementary Conditions and Division 01 Specification Sections, apply to this Section.

1.2 SUMMARY

A. Section Includes:

1. Roof deck.
2. Acoustical roof deck.
3. Composite floor deck.

B. Related Requirements:

1. Section 033000 "Cast-in-Place Concrete" for normal-weight and lightweight structural concrete fill over steel deck.
2. Section 051200 "Structural Steel Framing" for shop- and field-welded shear connectors.
3. Section 055000 "Metal Fabrications" for framing deck openings with miscellaneous steel shapes.
4. Section 099113 "Exterior Painting" for repair painting of primed deck and finish painting of deck.
5. Section 099123 "Interior Painting" for repair painting of primed deck and finish painting of deck.

1.3 ACTION SUBMITTALS

A. Product Data: For each type of deck, accessory, and product indicated.

B. Shop Drawings:

1. Include layout and types of deck panels, anchorage details, reinforcing channels, pans, cut deck openings, special jointing, accessories, and attachments to other construction.

1.4 INFORMATIONAL SUBMITTALS

A. Welding certificates.

B. Product Certificates: For each type of steel deck.

C. Product Test Reports: For tests performed by a qualified testing agency, indicating that each of the following complies with requirements:

1. Power-actuated mechanical fasteners.
2. Acoustical roof deck.

D. Evaluation Reports: For steel deck, from ICC-ES.

E. Field quality-control reports.

1.5 QUALITY ASSURANCE

A. Testing Agency Qualifications: Qualified according to ASTM E329 for testing indicated.

B. Welding Qualifications: Qualify procedures and personnel according to AWS D1.3/D1.3M, "Structural Welding Code - Sheet Steel."

1.6 DELIVERY, STORAGE, AND HANDLING

A. Protect steel deck from corrosion, deformation, and other damage during delivery, storage, and handling.

B. Stack steel deck on platforms or pallets and slope to provide drainage. Protect with a waterproof covering and ventilate to avoid condensation.

PART 2 - PRODUCTS

2.1 PERFORMANCE REQUIREMENTS

A. AISI Specifications: Comply with calculated structural characteristics of steel deck according to AISI's "North American Specification for the Design of Cold-Formed Steel Structural Members."

2.2 ROOF DECK

A. Roof Deck: Fabricate panels, without top-flange stiffening grooves, to comply with "SDI Specifications and Commentary for Steel Roof Deck," in SDI Publication No. 31, and with the following:

1. Galvanized and Shop-Primed Steel Sheet: ASTM A653/A653M, Structural Steel (SS), Grade 33 (230), G60 (Z180) zinc coating; cleaned, pretreated, and primed with manufacturer's standard baked-on, rust-inhibitive primer.

a. Color: Manufacturer's standard

2. Deck Profile: As indicated.
3. Profile Depth: As indicated.
4. Design Uncoated-Steel Thickness: As indicated
5. Span Condition: Triple span or more.
6. Side Laps: Overlapped or interlocking seam at Contractor's option.

2.3 ACOUSTICAL ROOF DECK

A. Acoustical Roof Deck: Fabricate panels, without top-flange stiffening grooves, to comply with "SDI Specifications and Commentary for Steel Roof Deck," in SDI Publication No. 31, and with the following:

1. Galvanized and Shop-Primed Steel Sheet: ASTM A653/A653M, Structural Steel (SS), Grade 33 (230) G60 (Z180) zinc coating; cleaned, pretreated, and primed with manufacturer's standard baked-on, rust-inhibitive primer.

a. Color: Manufacturer's standard.

2. Deck Profile: As indicated.
3. Profile Depth: As indicated
4. Design Uncoated-Steel Thickness: As indicated.
5. Span Condition: Triple span or more.
6. Side Laps: Overlapped or interlocking seam at Contractor's option.
7. Acoustical Perforations: Deck units with manufacturer's standard perforated vertical webs.
8. Sound-Absorbing Insulation: Manufacturer's standard premolded roll or strip of glass or mineral fiber.
9. Acoustical Performance: NRC 0.90, tested according to ASTM C423.

2.4 COMPOSITE FLOOR DECK

A. Composite Floor Deck: Fabricate panels, with integrally embossed or raised pattern ribs and interlocking side laps, to comply with "SDI Specifications and Commentary for Composite Steel Floor Deck," in SDI Publication No. 31, with the minimum section properties indicated, and with the following:

1. Galvanized and Shop-Primed Steel Sheet: ASTM A653/A653M, Structural Steel (SS), Grade 33 (230), G30 (Z90) zinc coating; with unpainted top surface and cleaned and pretreated bottom surface primed with manufacturer's standard gray baked-on, rust-inhibitive primer.
2. Profile Depth: As indicated on Drawings.
3. Design Uncoated-Steel Thickness: 0.0358 inch (0.91 mm).
4. Span Condition: Triple span or more.

2.5 ACCESSORIES

A. General: Provide manufacturer's standard accessory materials for deck that comply with requirements indicated.

B. Mechanical Fasteners: Corrosion-resistant, low-velocity, power-actuated or pneumatically driven carbon-steel fasteners; or self-drilling, self-threading screws.

C. Side-Lap Fasteners: Corrosion-resistant, hexagonal washer head; self-drilling, carbon-steel screws, No. 10 (4.8-mm) minimum diameter.

D. Flexible Closure Strips: Vulcanized, closed-cell, synthetic rubber.

E. Miscellaneous Sheet Metal Deck Accessories: Steel sheet, minimum yield strength of 33,000 psi (230 MPa), not less than 0.0359-inch (0.91-mm) design uncoated thickness, of same material and finish as deck; of profile indicated or required for application.

F. Pour Stops and Girder Fillers: Steel sheet, minimum yield strength of 33,000 psi (230 MPa), of same material and finish as deck, and of thickness and profile indicated.

G. Column Closures, End Closures, Z-Closures, and Cover Plates: Steel sheet, of same material, finish, and thickness as deck unless otherwise indicated.

H. Flat Sump Plates: Single-piece steel sheet, 0.0747 inch (1.90 mm) thick, of same material and finish as deck. For drains, cut holes in the field.

I. Recessed Sump Pans: Single-piece steel sheet, 0.0747 inch (1.90 mm) thick, of same material and finish as deck, with 3-inch- (76-mm-) wide flanges and level or sloped recessed pans of 1-1/2-inch (38-mm) minimum depth. For drains, cut holes in the field.

J. Galvanizing Repair Paint: ASTM A780/A780M.

K. Repair Paint: Manufacturer's standard rust-inhibitive primer of same color as primer.

PART 3 - EXECUTION

3.1 EXAMINATION

A. Examine supporting frame and field conditions for compliance with requirements for installation tolerances and other conditions affecting performance of the Work.

B. Proceed with installation only after unsatisfactory conditions have been corrected.

3.2 INSTALLATION, GENERAL

A. Install deck panels and accessories according to applicable specifications and commentary in SDI Publication No. 31, manufacturer's written instructions, and requirements in this Section.

B. Locate deck bundles to prevent overloading of supporting members.

C. Place deck panels on supporting frame and adjust to final position with ends accurately aligned and bearing on supporting frame before being permanently fastened. Do not stretch or contract side-lap interlocks.

D. Place deck panels flat and square and fasten to supporting frame without warp or deflection.

E. Cut and neatly fit deck panels and accessories around openings and other work projecting through or adjacent to deck.

F. Provide additional reinforcement and closure pieces at openings as required for strength, continuity of deck, and support of other work.

G. Comply with AWS requirements and procedures for manual shielded metal arc welding, appearance and quality of welds, and methods used for correcting welding work.

3.3 ROOF-DECK INSTALLATION

A. Fasten roof-deck panels to steel supporting members by arc spot (puddle) welds of the surface diameter indicated, and as follows:

1. Weld Diameter: 5/8 inch (16 mm), nominal.
2. Weld Spacing: As indicated on Drawings.

B. Side-Lap and Perimeter Edge Fastening: As indicated on Drawings

1. Mechanically fasten with self-drilling, No. 10 (4.8-mm-) diameter or larger, carbon-steel screws.

C. End Bearing: Install deck ends over supporting frame with a minimum end bearing of 1-1/2 inches (38 mm), with end joints as follows:

1. End Joints: Lapped 2 inches (51 mm) minimum

D. Roof Sump Pans and Sump Plates: Install over openings provided in roof deck and weld or mechanically fasten flanges to top of deck. Space welds mechanical fasteners not more than 12 inches (305 mm) apart with at least one weld or fastener at each corner.

1. Install reinforcing channels or zees in ribs to span between supports and weld or mechanically fasten.

E. Miscellaneous Roof-Deck Accessories: Install ridge and valley plates, finish strips, end closures, and reinforcing channels according to deck manufacturer's written instructions. Weld or mechanically fasten to substrate to provide a complete deck installation.

1. Weld cover plates at changes in direction of roof-deck panels unless otherwise indicated.

F. Flexible Closure Strips: Install flexible closure strips over partitions, walls, and where indicated. Install with adhesive according to manufacturer's written instructions to ensure complete closure.

G. Sound-Absorbing Insulation: Installation into topside ribs of deck as specified in Section <**Insert Section number**> "<**Insert Section title**>."

3.4 FLOOR-DECK INSTALLATION

A. Fasten floor-deck panels to steel supporting members by arc spot (puddle) welds of the surface diameter indicated and as follows:

1. Weld Diameter: 5/8 inch (16 mm), nominal.
2. Weld Spacing: Space and locate welds as indicated.

B. Side-Lap and Perimeter Edge Fastening: Fasten side laps and perimeter edges of panels between supports, at intervals not exceeding the lesser of one-half of the span or 36 inches (914 mm), and as follows:

1. Mechanically fasten with self-drilling, No. 10 (4.8-mm-) diameter or larger, carbon-steel screws.

C. End Bearing: Install deck ends over supporting frame with a minimum end bearing of 1-1/2 inches (38 mm), with end joints as follows:

1. End Joints: Lapped or butted at Contractor's option.

D. Pour Stops and Girder Fillers: Weld steel sheet pour stops and girder fillers to supporting structure according to SDI recommendations unless otherwise indicated.

E. Floor-Deck Closures: Weld steel sheet column closures, cell closures, and Z-closures to deck, according to SDI recommendations, to provide tight-fitting closures at open ends of ribs and sides of deck.

3.5 FIELD QUALITY CONTROL

A. Testing Agency: Owner will engage a qualified testing agency to perform tests and inspections.

B. Field welds will be subject to inspection.

C. Prepare test and inspection reports.

3.6 PROTECTION

A. Galvanizing Repairs: Prepare and repair damaged galvanized coatings on both surfaces of deck with galvanized repair paint according to ASTM A780/A780M and manufacturer's written instructions.

B. Repair Painting: Wire brush and clean rust spots, welds, and abraded areas on both surfaces of prime-painted deck immediately after installation, and apply repair paint.

1. Apply repair paint, of same color as adjacent shop-primed deck, to bottom surfaces of deck exposed to view.
2. Wire brushing, cleaning, and repair painting of bottom deck surfaces are included in Section 099113 "Exterior Painting" and Section 099123 "Interior Painting."

C. Repair Painting: Wire brushing, cleaning, and repair painting of rust spots, welds, and abraded areas of both deck surfaces are included in Section 099113 "Exterior Painting" and Section 099123 "Interior Painting."

END OF SECTION 053100

SECTION 054000 - COLD-FORMED METAL FRAMING

PART 1 - GENERAL

1.1 RELATED DOCUMENTS

A. Drawings and general provisions of the Contract, including General and Supplementary Conditions and Division 01 Specification Sections, apply to this Section.

1.2 SUMMARY

A. Section Includes:

1. Exterior non-load-bearing wall framing.
2. Interior non-load-bearing wall framing exceeding height limitations of standard, nonstructural metal framing.
3. Floor joist framing.
4. Soffit framing.

B. Related Requirements:

1. Section 055000 "Metal Fabrications" for miscellaneous steel shapes, masonry shelf angles, and connections used with cold-formed metal framing.
2. Section 092216 "Non-Structural Metal Framing" for standard, interior non-load-bearing, metal-stud framing, with height limitations and ceiling-suspension assemblies.

1.3 PREINSTALLATION MEETINGS

A. Retain "Preinstallation Conference" Paragraph below if Work of this Section is extensive or complex enough to justify a conference.

B. Preinstallation Conference: Conduct conference at Project site.

1.4 ACTION SUBMITTALS

A. Product Data: For each type of product.

B. Shop Drawings:

1. Include layout, spacings, sizes, thicknesses, and types of cold-formed steel framing; fabrication; and fastening and anchorage details, including mechanical fasteners.
2. Indicate reinforcing channels, opening framing, supplemental framing, strapping, bracing, bridging, splices, accessories, connection details, and attachment to adjoining work.

C. Delegated-Design Submittal: For cold-formed steel framing.

1.5 INFORMATIONAL SUBMITTALS

A. Qualification Data: For testing agency.

B. Welding certificates.

C. Product Certificates: For each type of code-compliance certification for studs and tracks.

D. Product Test Reports: For each listed product, for tests performed by manufacturer and witnessed by a qualified testing agency or a by a qualified testing agency.

1. Steel sheet.
2. Expansion anchors.
3. Power-actuated anchors.
4. Mechanical fasteners.
5. Vertical deflection clips.
6. Horizontal drift deflection clips
7. Miscellaneous structural clips and accessories.

E. Evaluation Reports: For nonstandard cold-formed steel framing, post-installed anchors, and power-actuated fasteners from ICC-ES or other qualified testing agency acceptable to authorities having jurisdiction.

1.6 QUALITY ASSURANCE

A. Testing Agency Qualifications: Qualified according to ASTM E329 for testing indicated.

B. Product Tests: Mill certificates or data from a qualified independent testing agency**,** or in-house testing with calibrated test equipment, indicating steel sheet complies with requirements, including base-metal thickness, yield strength, tensile strength, total elongation, chemical requirements, and metallic-coating thickness.

C. Code-Compliance Certification of Studs and Tracks: Provide documentation that framing members are certified according to the product-certification program of the Certified Steel Stud Association the Steel Framing Industry Association, or the Steel Stud Manufacturers Association.

D. Welding Qualifications: Qualify procedures and personnel according to the following:

1. AWS D1.1/D1.1M, "Structural Welding Code - Steel."
2. AWS D1.3/D1.3M, "Structural Welding Code - Sheet Steel."

PART 2 - PRODUCTS

2.1 PERFORMANCE REQUIREMENTS

A. Delegated Design: Engage a qualified professional engineer, as defined in Section 014000 "Quality Requirements," to design cold-formed steel framing.

B. Structural Performance: Provide cold-formed steel framing capable of withstanding design loads within limits and under conditions indicated.

1. Design Loads: As indicated on Drawings.
2. Deflection Limits: Design framing systems to withstand design loads without deflections greater than the following:

a. Exterior Non-Load-Bearing Framing: Horizontal deflection of 1/600 of the wall height.

b. Interior Non-Load-Bearing Framing: Horizontal deflection of 1/240 of the wall height under a service level horizontal load of 5 lbf/sq. ft. (239 Pa).
c. Floor Joist Framing: Vertical deflection of 1/480 for live loads and l/240 for total loads of the span.

3. Design framing systems to provide for movement of framing members located outside the insulated building envelope without damage or overstressing, sheathing failure, connection failure, undue strain on fasteners and anchors, or other detrimental effects when subject to a maximum ambient temperature change of 120 deg F (67 deg C).

4. Design framing system to maintain clearances at openings, to allow for construction tolerances, and to accommodate live load deflection of primary building structure as follows:

a. Upward and downward movement of 1 inch (19 mm).

5. Design exterior non-load-bearing wall framing to accommodate horizontal deflection without regard for contribution of sheathing materials.

C. Cold-Formed Steel Framing Standards: Unless more stringent requirements are indicated, framing shall comply with AISI S100, AISI S200, and the following:

1. Floor: AISI S210.
2. Wall Studs: AISI S211.
3. Headers: AISI S212.

2.2 COLD-FORMED STEEL FRAMING MATERIALS

A. Steel Sheet: ASTM A1003/A1003M, Structural Grade, Type H, metallic coated, of grade and coating designation as follows:

1. Grade: As required by structural performance.
2. Coating: G60 (Z180), A60 (ZF180), AZ50 (AZM150), or GF30 (ZGF90).

B. Steel Sheet for Vertical Deflection Clips: ASTM A653/A653M, structural steel, zinc coated, of grade and coating as follows:

1. Grade: As required by structural performance.
2. Coating: G60 (Z180).

2.3 EXTERIOR NON-LOAD-BEARING WALL FRAMING

A. Steel Studs: Manufacturer's standard C-shaped steel studs, of web depths indicated, punched, with stiffened flanges.

B. Steel Track: Manufacturer's standard U-shaped steel track, of web depths indicated, unpunched, with unstiffened flanges.

C. Vertical Deflection Clips: Manufacturer's standard bypass clips, capable of accommodating upward and downward vertical displacement of primary structure through positive mechanical attachment to stud web.

D. Single Deflection Track: Manufacturer's single, deep-leg, U-shaped steel track; unpunched, with unstiffened flanges, of web depth to contain studs while allowing free vertical movement, with flanges designed to support horizontal loads and transfer them to the primary structure.

E. Double Deflection Tracks: Manufacturer's double, deep-leg, U-shaped steel tracks, consisting of nested inner and outer tracks; unpunched, with unstiffened flanges.

1. Outer Track: Of web depth to allow free vertical movement of inner track, with flanges designed to support horizontal loads and transfer them to the primary structure.
2. Inner Track: Of web depth indicated.

F. Drift Clips: Manufacturer's standard bypass or head clips, capable of isolating wall stud from upward and downward vertical displacement and lateral drift of primary structure through positive mechanical attachment to stud web and structure.

2.4 INTERIOR NON-LOAD-BEARING WALL FRAMING

A. Steel Studs: Manufacturer's standard C-shaped steel studs, of web depths indicated, punched, with stiffened flanges.

B. Steel Track: Manufacturer's standard U-shaped steel track, of web depths indicated, unpunched, with unstiffened flanges.

C. Vertical Deflection Clips: Manufacturer's standard bypass clips, capable of accommodating upward and downward vertical displacement of primary structure through positive mechanical attachment to stud web.

D. Single Deflection Track: Manufacturer's single, deep-leg, U-shaped steel track; unpunched, with unstiffened flanges, of web depth to contain studs while allowing free vertical movement, with flanges designed to support horizontal loads and transfer them to the primary structure.

E. Double Deflection Tracks: Manufacturer's double, deep-leg, U-shaped steel tracks, consisting of nested inner and outer tracks; unpunched, with unstiffened flanges.

F. Drift Clips: Manufacturer's standard bypass or head clips, capable of isolating wall stud from upward and downward vertical displacement and lateral drift of primary structure through positive mechanical attachment to stud web and structure.

2.5 FLOOR JOIST FRAMING

A. Steel Joists: Manufacturer's standard C-shaped steel joists, of web depths indicated, with stiffened flanges, and as follows:

1. Minimum Base-Metal Thickness: 0.0428 inch (1.09 mm).
2. Flange Width: As required for design
3. Section Properties: As required for design

B. Steel Joist Track: Manufacturer's standard U-shaped steel joist track, of web depths indicated, unpunched, with unstiffened flanges, and as follows:

1. Minimum Base-Metal Thickness: 0.0428 inch (1.09 mm).
2. Flange Width: As required for design.

2.6 SOFFIT FRAMING

A. Exterior Soffit Frame: Manufacturer's standard C-shaped steel sections, of web depths indicated, with stiffened flanges, and as follows:

1. Minimum Base-Metal Thickness: 0.0428 inch (1.09 mm).
2. Flange Width: 1-5/8 inches (41 mm), minimum.
3. Section Properties: As required for design

2.7 FRAMING ACCESSORIES

A. Fabricate steel-framing accessories from ASTM A1003/A1003M, Structural Grade, Type H, metallic coated steel sheet, of same grade and coating designation used for framing members.

B. Provide accessories of manufacturer's standard thickness and configuration, unless otherwise indicated, as follows:

1. Supplementary framing.
2. Bracing, bridging, and solid blocking.
3. Web stiffeners.
4. Anchor clips.
5. End clips.
6. Foundation clips.
7. Gusset plates.
8. Stud kickers and knee braces.
9. Joist hangers and end closures.
10. Hole-reinforcing plates.
11. Backer plates.

2.8 ANCHORS, CLIPS, AND FASTENERS

A. Steel Shapes and Clips: ASTM A36/A36M, zinc coated by hot-dip process according to ASTM A123/A123M.

B. Anchor Bolts: ASTM F1554, Grade 36, threaded carbon-steel hex-headed bolts**,** carbon-steel nuts, and flat, hardened-steel washers; zinc coated by hot-dip process according to ASTM A153/A153M, Class C.

C. Post-Installed Anchors: Fastener systems with bolts of same basic metal as fastened metal, if visible, unless otherwise indicated; with working capacity greater than or equal to the design load, according to an evaluation report acceptable to authorities having jurisdiction, based on ICC-ES AC01, ICC-ES AC193, ICC-ES AC58, or ICC-ES AC308 as appropriate for the substrate.

1. Uses: Securing cold-formed steel framing to structure.
2. Type: Torque-controlled expansion anchor, Torque-controlled adhesive anchor, or] adhesive anchor.
3. Material for Interior Locations: Carbon-steel components zinc plated to comply with ASTM B633 or ASTM F1941 (ASTM F1941M), Class Fe/Zn 5, unless otherwise indicated.
4. Material for Exterior or Interior Locations and Where Stainless Steel Is Indicated: Alloy Group 1 (A1] stainless-steel bolts, ASTM F593 (ASTM F738M), and nuts, ASTM F594 (ASTM F836M).

D. Power-Actuated Anchors: Fastener systems with working capacity greater than or equal to the design load, according to an evaluation report acceptable to authorities having jurisdiction, based on ICC-ES AC70.

E. Mechanical Fasteners: ASTM C1513, corrosion-resistant-coated, self-drilling, self-tapping, steel drill screws.

1. Head Type: Low-profile head beneath sheathing; manufacturer's standard elsewhere.

F. Welding Electrodes: Comply with AWS standards.

2.9 MISCELLANEOUS MATERIALS

A. Galvanizing Repair Paint: ASTM A780/A780M, MIL-P-21035B or SSPC-Paint 20.

B. Cement Grout: Portland cement, ASTM C150/C150M, Type I; and clean, natural sand, ASTM C404. Mix at ratio of 1 part cement to 2-1/2 parts sand, by volume, with minimum water required for placement and hydration.

C. Nonmetallic, Nonshrink Grout: Factory-packaged, nonmetallic, noncorrosive, nonstaining grout, complying with ASTM C1107/C1107M, and with a fluid consistency and 30-minute working time.

D. Shims: Load-bearing, high-density, multimonomer, nonleaching plastic; or cold-formed steel of same grade and metallic coating as framing members supported by shims.

E. Sealer Gaskets: Closed-cell neoprene foam, 1/4 inch (6 mm) thick, selected from manufacturer's standard widths to match width of bottom track or rim track members as required.

2.10 FABRICATION

A. Fabricate cold-formed steel framing and accessories plumb, square, and true to line, and with connections securely fastened, according to referenced AISI's specifications and standards, manufacturer's written instructions, and requirements in this Section.

1. Fabricate framing assemblies using jigs or templates.
2. Cut framing members by sawing or shearing; do not torch cut.
3. Fasten cold-formed steel framing members by welding, screw fastening, clinch fastening, pneumatic pin fastening, or riveting as standard with fabricator. Wire tying of framing members is not permitted.

a. Comply with AWS D1.3/D1.3M requirements and procedures for welding, appearance and quality of welds, and methods used in correcting welding work.
b. Locate mechanical fasteners and install according to Shop Drawings, with screws penetrating joined members by no fewer than three exposed screw threads.

4. Fasten other materials to cold-formed steel framing by welding, bolting, pneumatic pin fastening, or screw fastening, according to Shop Drawings.

B. Reinforce, stiffen, and brace framing assemblies to withstand handling, delivery, and erection stresses. Lift fabricated assemblies by means that prevent damage or permanent distortion.

C. Tolerances: Fabricate assemblies level, plumb, and true to line to a maximum allowable variation of 1/8 inch in 10 feet (1:960) and as follows:

1. Spacing: Space individual framing members no more than plus or minus 1/8 inch (3 mm) from plan location. Cumulative error shall not exceed minimum fastening requirements of sheathing or other finishing materials.
2. Squareness: Fabricate each cold-formed steel framing assembly to a maximum out-of-square tolerance of 1/8 inch (3 mm).

PART 3 - EXECUTION

3.1 EXAMINATION

A. Examine substrates, areas, conditions, and abutting structural framing for compliance with requirements for installation tolerances and other conditions affecting performance of the Work.

B. Proceed with installation only after unsatisfactory conditions have been corrected.

3.2 PREPARATION

A. Before sprayed fire-resistive materials are applied, attach continuous angles, supplementary framing, or tracks to structural members indicated to receive sprayed fire-resistive materials.

B. After applying sprayed fire-resistive materials, remove only as much of these materials as needed to complete installation of cold-formed framing without reducing thickness of fire-resistive materials below that required to obtain fire-resistance ratings indicated. Protect remaining fire-resistive materials from damage.

C. Install sealer gaskets at the underside of wall bottom track or rim track and at the top of foundation wall or slab at stud or joist locations.

3.3 INSTALLATION, GENERAL

A. Cold-formed steel framing may be shop or field fabricated for installation, or it may be field assembled.

B. Install cold-formed steel framing according to AISI S200, AISI S202, and manufacturer's written instructions unless more stringent requirements are indicated.

C. Install shop- or field-fabricated, cold-formed framing and securely anchor to supporting structure.

1. Screw, bolt, or weld wall panels at horizontal and vertical junctures to produce flush, even, true-to-line joints with maximum variation in plane and true position between fabricated panels not exceeding 1/16 inch (1.6 mm).

D. Install cold-formed steel framing and accessories plumb, square, and true to line, and with connections securely fastened.

1. Cut framing members by sawing or shearing; do not torch cut.
2. Fasten cold-formed steel framing members by welding, screw fastening, clinch fastening, or riveting. Wire tying of framing members is not permitted.

a. Comply with AWS D1.3/D1.3M requirements and procedures for welding, appearance and quality of welds, and methods used in correcting welding work.
b. Locate mechanical fasteners, install according to Shop Drawings, and comply with requirements for spacing, edge distances, and screw penetration.

E. Install framing members in one-piece lengths unless splice connections are indicated for track or tension members.

F. Install temporary bracing and supports to secure framing and support loads equal to those for which structure was designed. Maintain braces and supports in place, undisturbed, until entire integrated supporting structure has been completed and permanent connections to framing are secured.

G. Do not bridge building expansion joints with cold-formed steel framing. Independently frame both sides of joints.

H. Install insulation, specified in Section 072100 "Thermal Insulation," in framing-assembly members, such as headers, sills, boxed joists, and multiple studs at openings, that are inaccessible on completion of framing work.

I. Fasten hole-reinforcing plate over web penetrations that exceed size of manufacturer's approved or standard punched openings.

3.4 EXTERIOR NON-LOAD-BEARING WALL INSTALLATION

A. Install continuous tracks sized to match studs. Align tracks accurately and securely anchor to supporting structure.

B. Fasten both flanges of studs to bottom track unless otherwise indicated. Space studs as follows:

1. Stud Spacing: As indicated on Drawings.

C. Set studs plumb, except as needed for diagonal bracing or required for nonplumb walls or warped surfaces and similar requirements.

D. Isolate non-load-bearing steel framing from building structure to prevent transfer of vertical loads while providing lateral support.

1. Install single deep-leg deflection tracks and anchor to building structure.
2. Install double deep-leg deflection tracks and anchor outer track to building structure.
3. Connect vertical deflection clips to bypassing studs and anchor to building structure.
4. Connect drift clips to cold-formed steel framing and anchor to building structure.

E. Install horizontal bridging in wall studs, spaced vertically in rows indicated on Shop Drawings but not more than 48 inches (1220 mm) apart. Fasten at each stud intersection.

1. Channel Bridging: Cold-rolled steel channel, welded or mechanically fastened to webs of punched studs.
2. Strap Bridging: Combination of flat, taut, steel sheet straps of width and thickness indicated and stud-track solid blocking of width and thickness to match studs. Fasten flat straps to stud flanges and secure solid blocking to stud webs or flanges.

3. Bar Bridging: Proprietary bridging bars installed according to manufacturer's written instructions.

F. Top Bridging for Single Deflection Track: Install row of horizontal bridging within 12 inches (305 mm) of single deflection track. Install a combination of bridging and stud or stud-track solid blocking of width and thickness matching studs, secured to stud webs or flanges.

1. Install solid blocking at centers indicated on Shop Drawings

G. Install miscellaneous framing and connections, including stud kickers, web stiffeners, clip angles, continuous angles, anchors, and fasteners, to provide a complete and stable wall-framing system.

3.5 INTERIOR NON-LOAD-BEARING WALL INSTALLATION

A. Install continuous tracks sized to match studs. Align tracks accurately and securely anchor to supporting structure.

B. Fasten both flanges of studs to bottom track unless otherwise indicated. Space studs as follows:

1. Stud Spacing: As indicated on Drawings.

C. Set studs plumb, except as needed for diagonal bracing or required for nonplumb walls or warped surfaces and similar requirements.

D. Isolate non-load-bearing steel framing from building structure to prevent transfer of vertical loads while providing lateral support.

1. Install single deep-leg deflection tracks and anchor to building structure.
2. Install double deep-leg deflection tracks and anchor outer track to building structure.
3. Connect vertical deflection clips to studs and anchor to building structure.
4. Connect drift clips to cold-formed steel metal framing and anchor to building structure.

E. Install horizontal bridging in wall studs, spaced vertically in rows indicated on Shop Drawings but not more than 48 inches (1220 mm) apart. Fasten at each stud intersection.

1. Channel Bridging: Cold-rolled steel channel, welded or mechanically fastened to webs of punched studs.
2. Strap Bridging: Combination of flat, taut, steel sheet straps of width and thickness indicated and stud-track solid blocking of width and thickness to match studs. Fasten flat straps to stud flanges and secure solid blocking to stud webs or flanges.
3. Bar Bridging: Proprietary bridging bars installed according to manufacturer's written instructions.

F. Top Bridging for Single Deflection Track: Install row of horizontal bridging within 12 inches (305 mm) of single deflection track. Install a combination of bridging and stud or stud-track solid blocking of width and thickness matching studs, secured to stud webs or flanges.

1. Install solid blocking at centers indicated on Shop Drawings.

G. Install miscellaneous framing and connections, including stud kickers, web stiffeners, clip angles, continuous angles, anchors, and fasteners, to provide a complete and stable wall-framing system.

3.6 JOIST INSTALLATION

A. Install perimeter joist track sized to match joists. Align and securely anchor or fasten track to supporting structure at corners, ends, and spacings indicated on Shop Drawings.

B. Install joists bearing on supporting frame, level, straight, and plumb; adjust to final position, brace, and reinforce. Fasten joists to both flanges of joist track.

1. Install joists over supporting frame with a minimum end bearing of 1-1/2 inches (38 mm).
2. Reinforce ends and bearing points of joists with web stiffeners, end clips, joist hangers, steel clip angles, or steel-stud sections.

C. Space joists not more than 2 inches (51 mm) from abutting walls, and as follows:

1. Joist Spacing: 16 inches (406 mm).

D. Frame openings with built-up joist headers, consisting of joist and joist track or another combination of connected joists if indicated.

E. Install joist reinforcement at interior supports with single, short length of joist section located directly over interior support, with lapped joists of equal length to joist reinforcement.

1. Install web stiffeners to transfer axial loads of walls above.

F. Install bridging at intervals indicated on Shop Drawings. Fasten bridging at each joist intersection as follows:

1. Joist-Track Solid Bridging: Joist-track solid blocking of width and thickness indicated, secured to joist webs.
2. Combination Bridging: Combination of flat, taut, steel sheet straps of width and thickness indicated and joist-track solid blocking of width and thickness indicated. Fasten flat straps to bottom flange of joists and secure solid blocking to joist webs.

G. Install miscellaneous joist framing and connections, including web stiffeners, closure pieces, clip angles, continuous angles, hold-down angles, anchors, and fasteners, to provide a complete and stable joist-framing assembly.

3.7 ERECTION TOLERANCES

A. Install cold-formed steel framing level, plumb, and true to line to a maximum allowable tolerance variation of 1/8 inch in 10 feet (1:960) and as follows:

1. Space individual framing members no more than plus or minus 1/8 inch (3 mm) from plan location. Cumulative error shall not exceed minimum fastening requirements of sheathing or other finishing materials.

3.8 FIELD QUALITY CONTROL

A. Testing: Owner will engage a qualified independent testing and inspecting agency to perform field tests and inspections and prepare test reports.

B. Field and shop welds will be subject to testing and inspecting.

C. Testing agency will report test results promptly and in writing to Contractor and Architect.

D. Cold-formed steel framing will be considered defective if it does not pass tests and inspections.

E. Additional testing and inspecting, at Contractor's expense, will be performed to determine compliance of replaced or additional work with specified requirements.

3.9 REPAIRS AND PROTECTION

A. Galvanizing Repairs: Prepare and repair damaged galvanized coatings on fabricated and installed cold-formed steel framing with galvanized repair paint according to ASTM A780/A780M and manufacturer's written instructions.

B. Provide final protection and maintain conditions, in a manner acceptable to manufacturer and Installer, that ensure that cold-formed steel framing is without damage or deterioration at time of Substantial Completion.

END OF SECTION 054000

SECTION 055000 - METAL FABRICATIONS

PART 1 - GENERAL

1.1 RELATED DOCUMENTS

A. Drawings and general provisions of the Contract, including General and Supplementary Conditions and Division 01 Specification Sections, apply to this Section.

1.2 SUMMARY

A. Section Includes:

1. Steel framing and supports for operable partitions.
2. Steel framing and supports for overhead doors.
3. Steel tube reinforcement for low partitions.
4. Steel framing and supports for mechanical and electrical equipment.
5. Steel framing and supports for applications where framing and supports are not specified in other Sections.
6. Recessed Tie Downs in Arms Vault
7. Elevator machine beams, hoist beams,.
8. Steel shapes for supporting elevator door sills.
9. Shelf angles.
10. Metal ladders.
11. Metal .
12. Elevator pit sump covers.
13. Miscellaneous steel trim including steel angle corner guards steel edgings loading-dock edge angles.
14. Metal bollards.
15. guards.
16. Loose bearing and leveling plates for applications where they are not specified in other Sections.

B. Products furnished, but not installed, under this Section include the following:

1. Loose steel lintels.
2. Anchor bolts, steel pipe sleeves, slotted-channel inserts, and wedge-type inserts indicated to be cast into concrete or built into unit masonry.
3. Steel weld plates and angles for casting into concrete for applications where they are not specified in other Sections.

C. Related Requirements:

1. Section 033000 "Cast-in-Place Concrete" for installing anchor bolts, steel pipe sleeves, slotted-channel inserts, wedge-type inserts, and other items cast into concrete.
2. Section 042000 "Unit Masonry" for installing loose lintels, anchor bolts, and other items built into unit masonry.
3. Section 051200 "Structural Steel Framing."

1.3 COORDINATION

A. Coordinate selection of shop primers with topcoats to be applied over them. Comply with paint and coating manufacturers' written recommendations to ensure that shop primers and topcoats are compatible with one another.

B. Coordinate installation of metal fabrications that are anchored to or that receive other work. Furnish setting drawings, templates, and directions for installing anchorages, including sleeves, concrete inserts, anchor bolts, and items with integral anchors, that are to be embedded in concrete or masonry. Deliver such items to Project site in time for installation.

1.4 ACTION SUBMITTALS

A. Product Data: For the following:

1. Paint products.
2. Grout.

B. LEED Submittals:

1. Product Data for Credit MR 4: For products having recycled content, documentation indicating percentages by weight of postconsumer and preconsumer recycled content. Include statement indicating cost for each product having recycled content.

C. Shop Drawings: Show fabrication and installation details. Include plans, elevations, sections, and details of metal fabrications and their connections. Show anchorage and accessory items. Provide Shop Drawings for the following:

1. Steel framing and supports for operable partitions.
2. Steel framing and supports for overhead doors and grilles.
3. Steel tube reinforcement for low partitions.
4. Steel framing and supports for mechanical and electrical equipment.
5. Steel framing and supports for applications where framing and supports are not specified in other Sections.
6. Elevator machine beams, hoist beams, and divider beams.
7. Steel shapes for supporting elevator door sills.
8. Shelf angles.
9. Metal ladders.
10. Elevator pit sump covers.
11. Miscellaneous steel trim including steel angle corner guards steel edgings loading-dock edge angles.
12. Metal bollards.
13. guards.
14. Abrasive metal.
15. Loose steel lintels.

D. Samples for Verification: For each type and finish of extruded.

E. Delegated-Design Submittal: For ladders and alternating tread devices, including analysis data signed and sealed by the qualified professional engineer responsible for their preparation.

1.5 INFORMATIONAL SUBMITTALS

A. Qualification Data: For professional engineer.

B. Research/Evaluation Reports: For post-installed anchors, from ICC-ES.

1.6 QUALITY ASSURANCE

A. Welding Qualifications: Qualify procedures and personnel according to AWS D1.1/D1.1M, "Structural Welding Code - Steel."

B. Welding Qualifications: Qualify procedures and personnel according to the following:

1. AWS D1.1/D1.1M, "Structural Welding Code - Steel."
2. AWS D1.2/D1.2M, "Structural Welding Code - Aluminum."
3. AWS D1.6/D1.6M, "Structural Welding Code - Stainless Steel."

1.7 FIELD CONDITIONS

A. Field Measurements: Verify actual locations of walls and other construction contiguous with metal fabrications by field measurements before fabrication.

PART 2 - PRODUCTS

2.1 PERFORMANCE REQUIREMENTS

A. Delegated Design: Engage a qualified professional engineer, as defined in Section 014000 "Quality Requirements," to design ladders .

B. Thermal Movements: Allow for thermal movements from ambient and surface temperature changes acting on exterior metal fabrications by preventing buckling, opening of joints, overstressing of components, failure of connections, and other detrimental effects.

1. Temperature Change: 120 deg F, ambient; 180 deg F, material surfaces.

2.2 METALS

A. Metal Surfaces, General: Provide materials with smooth, flat surfaces unless otherwise indicated. For metal fabrications exposed to view in the completed Work, provide materials without seam marks, roller marks, rolled trade names, or blemishes.

B. Recycled Content of Steel Products: Postconsumer recycled content plus one-half of preconsumer recycled content not less than 25 percent.

C. Steel Plates, Shapes, and Bars: ASTM A 36/A 36M.

D. Steel Tubing: ASTM A 500/A 500M, cold-formed steel tubing.

E. Steel Pipe: ASTM A 53/A 53M, Standard Weight (Schedule 40) unless otherwise indicated.

F. Slotted Channel Framing: Cold-formed metal box channels (struts) complying with MFMA-4.

1. Size of Channels: 1-5/8 by 1-5/8 inches.
2. Material: Galvanized steel, ASTM A 653/A 653M, commercial steel, Type B, with G90 coating; 0.108-inch nominal thickness.
3. Material: Cold-rolled steel, ASTM A 1008/A 1008M, commercial steel, Type B 0.0966-inch minimum thickness; unfinished coated with rust-inhibitive, baked-on, acrylic enamel hot-dip galvanized after fabrication.

2.3 FASTENERS

A. General: Unless otherwise indicated, provide Type 304 stainless-steel fasteners for exterior use and zinc-plated fasteners with coating complying with ASTM B 633 or ASTM F 1941, Class Fe/Zn 5, at exterior walls. Select fasteners for type, grade, and class required.

B. Steel Bolts and Nuts: Regular hexagon-head bolts, ASTM A 307, Grade A; with hex nuts, ASTM A 563; and, where indicated, flat washers.

C. Steel Bolts and Nuts: Regular hexagon-head bolts, ASTM A 325, Type 3; with hex nuts, ASTM A 563, Grade C3; and, where indicated, flat washers.

D. Stainless-Steel Bolts and Nuts: Regular hexagon-head annealed stainless-steel bolts, ASTM F 593; with hex nuts, ASTM F 594; and, where indicated, flat washers; Alloy Group 1.

E. Anchor Bolts: ASTM F 1554, Grade 36, of dimensions indicated; with nuts, ASTM A 563; and, where indicated, flat washers.

1. Hot-dip galvanize or provide mechanically deposited, zinc coating where item being fastened is indicated to be galvanized.

F. Anchors, General: Anchors capable of sustaining, without failure, a load equal to six times the load imposed when installed in unit masonry and four times the load imposed when installed in concrete, as determined by testing according to ASTM E 488/E 488M, conducted by a qualified independent testing agency.

G. Cast-in-Place Anchors in Concrete: Either threaded type or wedge type unless otherwise indicated; galvanized ferrous castings, either ASTM A 47/A 47M malleable iron or ASTM A 27/A 27M cast steel. Provide bolts, washers, and shims as needed, all hot-dip galvanized per ASTM F 2329.

H. Post-Installed Anchors: Torque-controlled expansion anchors or chemical anchors.

1. Material for Interior Locations: Carbon-steel components zinc plated to comply with ASTM B 633 or ASTM F 1941, Class Fe/Zn 5, unless otherwise indicated.
2. Material for Exterior Locations and Where Stainless Steel Is Indicated: Alloy Group 1 stainless-steel bolts, ASTM F 593, and nuts, ASTM F 594.

I. Slotted-Channel Inserts: Cold-formed, hot-dip galvanized-steel box channels (struts) complying with MFMA-4, 1-5/8 by 7/8 inches by length indicated with anchor straps or studs not less than 3 inches long at not more than 8 inches o.c. Provide with temporary filler and tee-head bolts, complete with washers and nuts, all zinc-plated to comply with ASTM B 633, Class Fe/Zn 5, as needed for fastening to inserts.

J. Recessed Tie-Downs:

1. Summary: Recessed metal bracket to chain elements to the floor. The recessed ti-down ring shall be sized to allow a 2” O.D. chain and padlock to be secured together
2. Basis of Design: Subject to compliance with requirements, provide AN-5000 with a 4” stem or ANC-522 with a 4” stem by Anchor Manufacturing, Anchormfg.com or comparable product by one of the following:

    a. Pacific Marine and Industrial, pacificmarine.net
    b. Tandemloc, tandemloc.com

3. Material; Stainless Steel
4. Ring Size: 2.5” I.D. minimum

2.4 MISCELLANEOUS MATERIALS

A. Water-Based Primer: Emulsion type, anticorrosive primer for mildly corrosive environments that is resistant to flash rusting when applied to cleaned steel, complying with MPI#107 and compatible with topcoat.

B. Epoxy Zinc-Rich Primer: Complying with MPI#20 and compatible with topcoat.

C. Galvanizing Repair Paint: High-zinc-dust-content paint complying with SSPC-Paint 20 and compatible with paints specified to be used over it.

D. Bituminous Paint: Cold-applied asphalt emulsion complying with ASTM D 1187/D 1187M.

E. Nonshrink, Nonmetallic Grout: Factory-packaged, nonstaining, noncorrosive, nongaseous grout complying with ASTM C 1107/C 1107M. Provide grout specifically recommended by manufacturer for interior and exterior applications.

F. Concrete: Comply with requirements in Section 033000 "Cast-in-Place Concrete" for normal-weight, air-entrained, concrete with a minimum 28-day compressive strength of 3000 psi.

2.5 FABRICATION, GENERAL

A. Shop Assembly: Preassemble items in the shop to greatest extent possible. Disassemble units only as necessary for shipping and handling limitations. Use connections that maintain structural value of joined pieces. Clearly mark units for reassembly and coordinated installation.

B. Cut, drill, and punch metals cleanly and accurately. Remove burrs and ease edges to a radius of approximately 1/32 inch unless otherwise indicated. Remove sharp or rough areas on exposed surfaces.

C. Form bent-metal corners to smallest radius possible without causing grain separation or otherwise impairing work.

D. Form exposed work with accurate angles and surfaces and straight edges.

E. Weld corners and seams continuously to comply with the following:

1. Use materials and methods that minimize distortion and develop strength and corrosion resistance of base metals.
2. Obtain fusion without undercut or overlap.
3. Remove welding flux immediately.
4. At exposed connections, finish exposed welds and surfaces smooth and blended so no roughness shows after finishing and contour of welded surface matches that of adjacent surface.

F. Form exposed connections with hairline joints, flush and smooth, using concealed fasteners or welds where possible. Where exposed fasteners are required, use Phillips flat-head (countersunk) fasteners unless otherwise indicated. Locate joints where least conspicuous.

G. Fabricate seams and other connections that are exposed to weather in a manner to exclude water. Provide weep holes where water may accumulate.

H. Cut, reinforce, drill, and tap metal fabrications as indicated to receive finish hardware, screws, and similar items.

I. Provide for anchorage of type indicated; coordinate with supporting structure. Space anchoring devices to secure metal fabrications rigidly in place and to support indicated loads.

J. Where units are indicated to be cast into concrete or built into masonry, equip with integrally welded steel strap anchors, 1/8 by 1-1/2 inches, with a minimum 6-inch embedment and 2-inch hook, not less than 8 inches from ends and corners of units and 24 inches o.c., unless otherwise indicated.

2.6 MISCELLANEOUS FRAMING AND SUPPORTS

A. General: Provide steel framing and supports not specified in other Sections as needed to complete the Work.

B. Fabricate units from steel shapes, plates, and bars of welded construction unless otherwise indicated. Fabricate to sizes, shapes, and profiles indicated and as necessary to receive adjacent construction.

1. Fabricate units from slotted channel framing where indicated.
2. Furnish inserts for units installed after concrete is placed.

C. Fabricate supports for operable partitions from continuous steel beams of sizes indicated with attached bearing plates, anchors, and braces as indicated. Drill or punch bottom flanges of beams to receive partition track hanger rods; locate holes where indicated on operable partition Shop Drawings.

D. Galvanize miscellaneous framing and supports where indicated.

E. Prime miscellaneous framing and supports with zinc-rich primer specified in Section 099600 "High-Performance Coatings" where indicated.

2.7 SHELF ANGLES

A. Fabricate shelf angles from steel angles of sizes indicated and for attachment to concrete framing. Provide horizontally slotted holes to receive 3/4-inch bolts, spaced not more than 6 inches from ends and 24 inches o.c., unless otherwise indicated.

1. Provide mitered and welded units at corners.
2. Provide open joints in shelf angles at expansion and control joints. Make open joint approximately 2 inches larger than expansion or control joint.

B. For cavity walls, provide vertical channel brackets to support angles from backup masonry and concrete.

C. Galvanize and prime shelf angles located in exterior walls.

D. Prime shelf angles located in exterior walls with zinc-rich primer. primer specified in Section 099600 "High-Performance Coatings."

E. Furnish wedge-type concrete inserts, complete with fasteners, to attach shelf angles to cast-in-place concrete.

2.8 METAL LADDERS

A. General:

1. Comply with ANSI A14.3, except for elevator pit ladders.
2. For elevator pit ladders, comply with ASME A17.1/CSA B44.

B. Steel Ladders:

1. Space siderails 16 inches apart unless otherwise indicated.
2. Siderails: Continuous, 3/8-by-2-1/2-inch steel flat bars, with eased edges.
3. Rungs: 3/4-inch- diameter steel bars.
4. Fit rungs in centerline of siderails; plug-weld and grind smooth on outer rail faces.
5. Provide platforms as indicated fabricated from welded or pressure-locked steel bar grating, supported by steel angles. Limit openings in gratings to no more than 1/2 inch in least dimension.
6. Support each ladder at top and bottom and not more than 60 inches o.c. with welded or bolted steel brackets.
7. Galvanize exterior ladders, including brackets.
8. Prime exterior ladders, including brackets and fasteners, with zinc-rich primer. primer specified in Section 099600 "High-Performance Coatings."

2.9 MISCELLANEOUS STEEL TRIM

A. Unless otherwise indicated, fabricate units from steel shapes, plates, and bars of profiles shown with continuously welded joints and smooth exposed edges. Miter corners and use concealed field splices where possible.

B. Provide cutouts, fittings, and anchorages as needed to coordinate assembly and installation with other work.

1. Provide with integrally welded steel strap anchors for embedding in concrete or masonry construction.

C. Galvanize and prime exterior miscellaneous steel trim.

D. Prime exterior miscellaneous steel trim with zinc-rich primer. primer specified in Section 099600 "High-Performance Coatings."

2.10 METAL BOLLARDS

A. Fabricate metal bollards from Schedule 40 steel pipe Schedule 80 steel pipe 1/4-inch wall-thickness rectangular steel tubing steel shapes, as indicated.

1. Cap bollards with 1/4-inch- thick steel plate.
2. Where bollards are indicated to receive controls for door operators, provide cutouts for controls and holes for wire.
3. Where bollards are indicated to receive light fixtures, provide cutouts for fixtures and holes for wire.

B. Fabricate bollards with 3/8-inch- thick steel baseplates for bolting to concrete slab. Drill baseplates at all four corners for 3/4-inch anchor bolts.

1. Where bollards are to be anchored to sloping concrete slabs, angle baseplates for plumb alignment of bollards.

C. Fabricate sleeves for bollard anchorage from steel pipe tubing with 1/4-inch- thick steel plate welded to bottom of sleeve. Make sleeves not less than 8 inches deep and 3/4 inch larger than OD of bollard.

D. Fabricate internal sleeves for removable bollards from Schedule 40 steel pipe or 1/4-inch wall-thickness steel tubing with an OD approximately 1/16 inch less than ID of bollards. Match drill sleeve and bollard for 3/4-inch steel machine bolt.

E. Prime bollards with zinc-rich primer. primer specified in Section 099600 "High-Performance Coatings."

2.11 LOOSE BEARING AND LEVELING PLATES

A. Provide loose bearing and leveling plates for steel items bearing on masonry or concrete construction. Drill plates to receive anchor bolts and for grouting.

B. Galvanize plates.

C. Prime plates with zinc-rich primer. primer specified in Section 099600 "High-Performance Coatings."

2.12 LOOSE STEEL LINTELS

A. Fabricate loose steel lintels from steel angles and shapes of size indicated for openings and recesses in masonry walls and partitions at locations indicated. Fabricate in single lengths for each opening unless otherwise indicated. Weld adjoining members together to form a single unit where indicated.

B. Size loose lintels to provide bearing length at each side of openings equal to 1/12 of clear span, but not less than 8 inches unless otherwise indicated.

C. Galvanize and prime loose steel lintels located in exterior walls.

D. Prime loose steel lintels located in exterior walls with zinc-rich primer. primer specified in Section 099600 "High-Performance Coatings."

2.13 STEEL WELD PLATES AND ANGLES

A. Provide steel weld plates and angles not specified in other Sections, for items supported from concrete construction as needed to complete the Work. Provide each unit with no fewer than two integrally welded steel strap anchors for embedding in concrete.

2.14 FINISHES, GENERAL

A. Finish metal fabrications after assembly.

B. Finish exposed surfaces to remove tool and die marks and stretch lines, and to blend into surrounding surface.

2.15 STEEL AND IRON FINISHES

A. Galvanizing: Hot-dip galvanize items as indicated to comply with ASTM A 153/A 153M for steel and iron hardware and with ASTM A 123/A 123M for other steel and iron products.

1. Do not quench or apply post galvanizing treatments that might interfere with paint adhesion.

B. Shop prime iron and steel items not indicated to be galvanized unless they are to be embedded in concrete, sprayed-on fireproofing, or masonry, or unless otherwise indicated.

1. Shop prime with universal shop primer unless zinc-rich primer is primers specified in Section 099600 "High-Performance Coatings" are indicated.

C. Preparation for Shop Priming: Prepare surfaces to comply with requirements indicated below:

1. Exterior Items: SSPC-SP 6/NACE No. 3, "Commercial Blast Cleaning."
2. Items Indicated to Receive Zinc-Rich Primer: SSPC-SP 6/NACE No. 3, "Commercial Blast Cleaning."
3. Items Indicated to Receive Primers Specified in Section 099600 "High-Performance Coatings": SSPC-SP 6/NACE No. 3, "Commercial Blast Cleaning."
4. Other Items: SSPC-SP 3, "Power Tool Cleaning."

D. Shop Priming: Apply shop primer to comply with SSPC-PA 1, "Paint Application Specification No. 1: Shop, Field, and Maintenance Painting of Steel," for shop painting.

1. Stripe paint corners, crevices, bolts, welds, and sharp edges.

PART 3 - EXECUTION

3.1 INSTALLATION, GENERAL

A. Cutting, Fitting, and Placement: Perform cutting, drilling, and fitting required for installing metal fabrications. Set metal fabrications accurately in location, alignment, and elevation; with edges and surfaces level, plumb, true, and free of rack; and measured from established lines and levels.

B. Fit exposed connections accurately together to form hairline joints. Weld connections that are not to be left as exposed joints but cannot be shop welded because of shipping size limitations. Do not weld, cut, or abrade surfaces of exterior units that have been hot-dip galvanized after fabrication and are for bolted or screwed field connections.

C. Field Welding: Comply with the following requirements:

1. Use materials and methods that minimize distortion and develop strength and corrosion resistance of base metals.
2. Obtain fusion without undercut or overlap.
3. Remove welding flux immediately.
4. At exposed connections, finish exposed welds and surfaces smooth and blended so no roughness shows after finishing and contour of welded surface matches that of adjacent surface.

D. Fastening to In-Place Construction: Provide anchorage devices and fasteners where metal fabrications are required to be fastened to in-place construction. Provide threaded fasteners for use with concrete and masonry inserts, toggle bolts, through bolts, lag screws, wood screws, and other connectors.

E. Provide temporary bracing or anchors in formwork for items that are to be built into concrete, masonry, or similar construction.

3.2 INSTALLING MISCELLANEOUS FRAMING AND SUPPORTS

A. General: Install framing and supports to comply with requirements of items being supported, including manufacturers' written instructions and requirements indicated on Shop Drawings.

B. Anchor supports for overhead doors and overhead grilles securely to, and rigidly brace from, building structure.

3.3 INSTALLING METAL BOLLARDS

A. Fill metal-capped bollards solidly with concrete and allow concrete to cure seven days before installing.

1. Do not fill removable bollards with concrete.

B. Anchor bollards to existing construction with expansion anchors. Provide four 3/4-inch bolts at each bollard unless otherwise indicated.

1. Embed anchor bolts at least 4 inches in concrete.

C. Anchor bollards in concrete with pipe sleeves preset and anchored into concrete in formed or core-drilled holes not less than 8 inches deep and 3/4 inch larger than OD of bollard. Fill annular space around bollard solidly with nonshrink grout; mixed and placed to comply with grout manufacturer's written instructions. Slope grout up approximately 1/8 inch toward bollard.

D. Anchor bollards in place with concrete footings. Center and align bollards in holes 3 inches above bottom of excavation. Place concrete and vibrate or tamp for consolidation. Support and brace bollards in position until concrete has cured.

E. Anchor internal sleeves for removable bollards in formed or core-drilled holes not less than 8 inches deep and 3/4 inch larger than OD of sleeve. Fill annular space around internal sleeves solidly with nonshrink grout; mixed and placed to comply with grout manufacturer's written instructions. Slope grout up approximately 1/8 inch toward internal sleeve.

F. Anchor internal sleeves for removable bollards in place with concrete footings. Center and align sleeves in holes 3 inches above bottom of excavation. Place concrete and vibrate or tamp for consolidation. Support and brace sleeves in position until concrete has cured.

G. Place removable bollards over internal sleeves and secure with 3/4-inchmachine bolts and nuts. After tightening nuts, drill holes in bolts for inserting padlocks. Owner furnishes padlocks.

H. Fill bollards solidly with concrete, mounding top surface to shed water.

1. Do not fill removable bollards with concrete.

3.4 INSTALLING BEARING AND LEVELING PLATES

A. Clean concrete and masonry bearing surfaces of bond-reducing materials, and roughen to improve bond to surfaces. Clean bottom surface of plates.

B. Set bearing and leveling plates on wedges, shims, or leveling nuts. After bearing members have been positioned and plumbed, tighten anchor bolts. Do not remove wedges or shims but, if protruding, cut off flush with edge of bearing plate before packing with nonshrink grout. Pack grout solidly between bearing surfaces and plates to ensure that no voids remain.

3.5 ADJUSTING AND CLEANING

A. Touchup Painting: Immediately after erection, clean field welds, bolted connections, and abraded areas. Paint uncoated and abraded areas with the same material as used for shop painting to comply with SSPC-PA 1 for touching up shop-painted surfaces.

1. Apply by brush or spray to provide a minimum 2.0-mil dry film thickness.

B. Touchup Painting: Cleaning and touchup painting of field welds, bolted connections, and abraded areas of shop paint are specified in Section 099113 "Exterior Painting."

C. Galvanized Surfaces: Clean field welds, bolted connections, and abraded areas and repair galvanizing to comply with ASTM A 780/A 780M.

END OF SECTION 055000

SECTION 055113 - METAL PAN STAIRS

PART 1 - GENERAL

1.1 RELATED DOCUMENTS

A. Drawings and general provisions of the Contract, including General and Supplementary Conditions and Division 01 Specification Sections, apply to this Section.

1.2 SUMMARY

A. Section Includes:

1. Preassembled steel stairs with concrete-filled treads.
2. Steel tube railings attached to metal stairs.
3. Steel tube handrails attached to walls adjacent to metal stairs.

B. Related Requirements:

1. Section 033000 "Cast-in-Place Concrete" for concrete fill for stair treads and platforms.
2. Section 055213 "Pipe and Tube Railings" for pipe and tube railings.

1.3 COORDINATION

A. Coordinate selection of shop primers with topcoats to be applied over them. Comply with paint and coating manufacturers' written recommendations to ensure that shop primers and topcoats are compatible with one another.

B. Coordinate installation of anchorages for metal stairs. Furnish setting drawings, templates, and directions for installing anchorages, including sleeves, concrete inserts, anchor bolts, and items with integral anchors, that are to be embedded in concrete or masonry. Deliver such items to Project site in time for installation.

C. Coordinate locations of hanger rods and struts with other work so that they do not encroach on required stair width and are within the fire-resistance-rated stair enclosure.

1.4 ACTION SUBMITTALS

A. Product Data: For metal pan stairs and the following:

1. Prefilled metal-pan-stair treads.

B. Shop Drawings: Include plans, elevations, sections, details, and attachments to other work.

C. Delegated-Design Submittal: For stairs and railings, including analysis data signed and sealed by the qualified professional engineer responsible for their preparation.

1.5 INFORMATIONAL SUBMITTALS

A. Welding certificates.

B. Paint Compatibility Certificates: From manufacturers of topcoats applied over shop primers certifying that shop primers are compatible with topcoats.

1.6 QUALITY ASSURANCE

A. Installer Qualifications: Fabricator of products.

B. Welding Qualifications: Qualify procedures and personnel according to the following:

1. AWS D1.1/D1.1M, "Structural Welding Code - Steel."
2. AWS D1.3/D1.3M, "Structural Welding Code - Sheet Steel."

PART 2 - PRODUCTS

2.1 PERFORMANCE REQUIREMENTS

A. Delegated Design: Engage a qualified professional engineer, as defined in Section 014000 "Quality Requirements," to design stairs and railings.

B. Structural Performance of Stairs: Metal stairs shall withstand the effects of gravity loads and the following loads and stresses within limits and under conditions indicated:

1. Uniform Load: 100 lbf/sq. ft..
2. Concentrated Load: 300 lbf applied on an area of 4 sq. in..
3. Uniform and concentrated loads need not be assumed to act concurrently.
4. Stair Framing: Capable of withstanding stresses resulting from railing loads in addition to loads specified above.
5. Limit deflection of treads, platforms, and framing members to L/360 or 1/4 inch, whichever is less.

C. Structural Performance of Railings: Railings shall withstand the effects of gravity loads and the following loads and stresses within limits and under conditions indicated:

1. Handrails and Top Rails of Guards:

a. Uniform load of 50 lbf/ft. applied in any direction.
b. Concentrated load of 200 lbf applied in any direction.
c. Uniform and concentrated loads need not be assumed to act concurrently.

2. Infill of Guards:

a. Concentrated load of 50 lbf applied horizontally on an area of 1 sq. ft..
b. Infill load and other loads need not be assumed to act concurrently.

2.2 METALS

A. Metal Surfaces, General: Provide materials with smooth, flat surfaces unless otherwise indicated. For components exposed to view in the completed Work, provide materials without seam marks, roller marks, rolled trade names, or blemishes.

B. Steel Plates, Shapes, and Bars: ASTM A 36/A 36M.

C. Steel Tubing: ASTM A 500 (cold formed).

D. Cast Iron: Either gray iron, ASTM A 48/A 48M, or malleable iron, ASTM A 47/A 47M, unless otherwise indicated.

E. Uncoated, Cold-Rolled Steel Sheet: ASTM A 1008/A 1008M, structural steel, Grade 25, unless another grade is required by design loads; exposed.

F. Galvanized-Steel Sheet: ASTM A 653/A 653M, G90 coating, structural steel, Grade 33, unless another grade is required by design loads.

2.3 FASTENERS

A. General: Provide zinc-plated fasteners with coating complying with ASTM B 633 or ASTM F 1941, Class Fe/Zn 12 for exterior use, and Class Fe/Zn 5 where built into exterior walls. Select fasteners for type, grade, and class required.

B. Bolts and Nuts: Regular hexagon-head bolts, ASTM A 307, Grade A; with hex nuts, ASTM A 563; and, where indicated, flat washers.

C. Anchor Bolts: ASTM F 1554, Grade 36, of dimensions indicated; with nuts, ASTM A 563; and, where indicated, flat washers.

1. Provide mechanically deposited or hot-dip, zinc-coated anchor bolts for stairs indicated to be shop primed with zinc-rich primer.

D. Post-Installed Anchors: Torque-controlled expansion anchors or chemical anchors capable of sustaining, without failure, a load equal to six times the load imposed when installed in unit masonry and four times the load imposed when installed in concrete, as determined by testing according to ASTM E 488/E 488M, conducted by a qualified independent testing agency.

1. Material for Interior Locations: Carbon-steel components zinc plated to comply with ASTM B 633 or ASTM F 1941, Class Fe/Zn 5, unless otherwise indicated.
2. Material for Exterior Locations and Where Stainless Steel Is Indicated: Alloy Group 1 stainless-steel bolts, ASTM F 593, and nuts, ASTM F 594.

2.4 MISCELLANEOUS MATERIALS

A. Universal Shop Primer: Fast-curing, lead- and chromate-free, universal modified-alkyd primer complying with MPI#79 and compatible with topcoat.

1. Use primer containing pigments that make it easily distinguishable from zinc-rich primer.

B. Shop Primer for Galvanized Steel: Primer formulated for exterior use over zinc-coated metal and compatible with finish paint systems indicated.

C. Galvanizing Repair Paint: High-zinc-dust-content paint complying with SSPC-Paint 20 and compatible with paints specified to be used over it.

D. Bituminous Paint: Cold-applied asphalt emulsion complying with ASTM D 1187/D 1187M.

E. Concrete Materials and Properties: Comply with requirements in Section 033000 "Cast-in-Place Concrete" for normal-weight, air-entrained, ready-mix concrete with a minimum 28-day compressive strength of 3000 psi unless otherwise indicated.

F. Nonslip-Aggregate Concrete Finish: Factory-packaged abrasive aggregate made from fused, aluminum-oxide grits or crushed emery; rustproof and nonglazing; unaffected by freezing, moisture, or cleaning materials.

G. Welded Wire Reinforcement: ASTM A 185/A 185M, 6 by 6 inches, W1.4 by W1.4, unless otherwise indicated.

2.5 FABRICATION, GENERAL

A. Provide complete stair assemblies, including metal framing, hangers, struts, railings, clips, brackets, bearing plates, and other components necessary to support and anchor stairs and platforms on supporting structure.

1. Join components by welding unless otherwise indicated.
2. Use connections that maintain structural value of joined pieces.

B. Preassembled Stairs: Assemble stairs in shop to greatest extent possible. Disassemble units only as necessary for shipping and handling limitations. Clearly mark units for reassembly and coordinated installation.

C. Cut, drill, and punch metals cleanly and accurately. Remove burrs and ease edges to a radius of approximately 1/32 inch unless otherwise indicated. Remove sharp or rough areas on exposed surfaces.

D. Form bent-metal corners to smallest radius possible without causing grain separation or otherwise impairing work.

E. Form exposed work with accurate angles and surfaces and straight edges.

F. Weld connections to comply with the following:

1. Use materials and methods that minimize distortion and develop strength and corrosion resistance of base metals.
2. Obtain fusion without undercut or overlap.
3. Remove welding flux immediately.
4. Weld exposed corners and seams continuously unless otherwise indicated.
5. At exposed connections, finish exposed welds to comply with NOMMA's "Voluntary Joint Finish Standards" for Type 3 welds: partially dressed weld with spatter removed

G. Form exposed connections with hairline joints, flush and smooth, using concealed fasteners where possible. Where exposed fasteners are required, use Phillips flat-head (countersunk) screws or bolts unless otherwise indicated. Locate joints where least conspicuous.

2.6 STEEL-FRAMED STAIRS

A. NAAMM Stair Standard: Comply with "Recommended Voluntary Minimum Standards for Fixed Metal Stairs" in NAAMM AMP 510, "Metal Stairs Manual," Commercial Class, unless more stringent requirements are indicated.

B. Stair Framing:

1. Fabricate stringers of steel plates or channels or rectangular tubes as indicated on Drawings.

   a. Provide closures for exposed ends of channel stringers.

2. Construct platforms of steel plate or channel headers and miscellaneous framing members as indicated.
3. Weld stringers to headers; weld framing members to stringers and headers. If using bolts, fabricate and join so bolts are not exposed on finished surfaces.
4. Where masonry walls support metal stairs, provide temporary supporting struts designed for erecting steel stair components before installing masonry.

C. Metal Pan Stairs: Form risers, subtread pans, and subplatforms to configurations shown from steel sheet of thickness needed to comply with performance requirements, but not less than 0.067 inch.

1. Steel Sheet: Uncoated cold-rolled steel sheet.
2. Directly weld metal pans to stringers; locate welds on top of subtreads where they are concealed by concrete fill. Do not weld risers to stringers.
3. Attach risers and subtreads to stringers with brackets made of steel angles or bars. Weld brackets to stringers and attach metal pans to brackets by welding, riveting, or bolting.
4. Shape metal pans to include nosing integral with riser.
5. Attach abrasive nosings to risers.
6. At Contractor's option, provide stair assemblies with metal pan subtreads filled with reinforced concrete during fabrication.
7. Provide subplatforms of configuration indicated or, if not indicated, the same as subtreads. Weld subplatforms to platform framing.

2.7 STAIR RAILINGS

A. Steel Tube Railings: Fabricate railings to comply with requirements indicated for design, dimensions, details, finish, and member sizes, including wall thickness of tube, post spacings, and anchorage, but not less than that needed to withstand indicated loads.

1. Rails and Posts: 1-5/8-inch- diameter top and bottom rails and 1-1/2-inch- square posts.
2. Picket Infill: 1/2-inch- square pickets spaced less than 4 inches clear.

B. Welded Connections: Fabricate railings with welded connections. Cope components at connections to provide close fit, or use fittings designed for this purpose. Weld all around at connections, including at fittings.

1. Finish welds to comply with NOMMA's "Voluntary Joint Finish Standards" for Type 3 welds: partially dressed weld with spatter removed as shown in NAAMM AMP 521.

C. Form changes in direction of railings as follows:

1. By radius bends of radius indicated or by inserting prefabricated elbow fittings of radius indicated.

D. For changes in direction made by bending, use jigs to produce uniform curvature for each repetitive configuration required. Maintain cross section of member throughout entire bend without buckling, twisting, cracking, or otherwise deforming exposed surfaces of components.

E. Close exposed ends of railing members with prefabricated end fittings.

F. Provide wall returns at ends of wall-mounted handrails unless otherwise indicated. Close ends of returns unless clearance between end of rail and wall is 1/4 inch or less.

G. Connect posts to stair framing by direct welding unless otherwise indicated.

H. Brackets, Flanges, Fittings, and Anchors: Provide wall brackets, end closures, flanges, miscellaneous fittings, and anchors for interconnecting components and for attaching to other work. Furnish inserts and other anchorage devices for connecting to concrete or masonry work.

1. For galvanized railings, provide galvanized fittings, brackets, fasteners, sleeves, and other ferrous-metal components.
2. For nongalvanized railings, provide nongalvanized ferrous-metal fittings, brackets, fasteners, and sleeves, except galvanize anchors embedded in exterior masonry and concrete construction.
3. Provide type of bracket with flange tapped for concealed anchorage to threaded hanger bolt and that provides 1-1/2-inch clearance from inside face of handrail to finished wall surface.

I. Fillers: Provide fillers made from steel plate, or other suitably crush-resistant material, where needed to transfer wall bracket loads through wall finishes to structural supports. Size fillers to suit wall finish thicknesses and to produce adequate bearing area to prevent bracket rotation and overstressing of substrate.

2.8 FINISHES

A. Finish metal stairs after assembly.

B. Galvanizing: Hot-dip galvanize items as indicated to comply with ASTM A 153/A 153M for steel and iron hardware and with ASTM A 123/A 123M for other steel and iron products.

1. Do not quench or apply post galvanizing treatments that might interfere with paint adhesion.
2. Fill vent and drain holes that are exposed in the finished Work, unless indicated to remain as weep holes, by plugging with zinc solder and filing off smooth.

C. Preparation for Shop Priming: Prepare uncoated ferrous-metal surfaces to comply with SSPC-SP 3, "Power Tool Cleaning."

D. Apply shop primer to uncoated surfaces of metal stair components, except those with galvanized finishes and those to be embedded in concrete or masonry unless otherwise indicated. Comply with SSPC-PA 1, "Paint Application Specification No. 1: Shop, Field, and Maintenance Painting of Steel," for shop painting.

PART 3 - EXECUTION

3.1 INSTALLING METAL PAN STAIRS

A. Fastening to In-Place Construction: Provide anchorage devices and fasteners where necessary for securing metal stairs to in-place construction. Include threaded fasteners for concrete and masonry inserts, through-bolts, lag bolts, and other connectors.

B. Cutting, Fitting, and Placement: Perform cutting, drilling, and fitting required for installing metal stairs. Set units accurately in location, alignment, and elevation, measured from established lines and levels and free of rack.

C. Install metal stairs by welding stair framing to steel structure or to weld plates cast into concrete unless otherwise indicated.

D. Provide temporary bracing or anchors in formwork for items that are to be built into concrete, masonry, or similar construction.

E. Fit exposed connections accurately together to form hairline joints. Weld connections that are not to be left as exposed joints but cannot be shop welded because of shipping size limitations. Do not weld, cut, or abrade surfaces of exterior units that have been hot-dip galvanized after fabrication and are for bolted or screwed field connections.

F. Field Welding: Comply with requirements for welding in "Fabrication, General" Article.

G. Place and finish concrete fill for treads and platforms to comply with Section 033000 "Cast-in-Place Concrete."

3.2 INSTALLING RAILINGS

A. Adjust railing systems before anchoring to ensure matching alignment at abutting joints. Space posts at spacing indicated or, if not indicated, as required by design loads. Plumb posts in each direction. Secure posts and rail ends to building construction as follows:

1. Anchor posts to steel by welding to steel supporting members.
2. Anchor handrail ends to concrete with steel round flanges welded to rail ends and anchored with postinstalled anchors and bolts.

B. Attach handrails to wall with wall brackets. Locate brackets as indicated or, if not indicated, at spacing required to support structural loads. Secure wall brackets to building construction as required to comply with performance requirements.

3.3 ADJUSTING AND CLEANING

A. Touchup Painting: Immediately after erection, clean field welds, bolted connections, and abraded areas of shop paint, and paint exposed areas with same material as used for shop painting to comply with SSPC-PA 1 for touching up shop-painted surfaces.

1. Apply by brush or spray to provide a minimum 2.0-mil dry film thickness.

B. Galvanized Surfaces: Clean field welds, bolted connections, and abraded areas and repair galvanizing to comply with ASTM A 780/A 780M.

END OF SECTION 055113

SECTION 057300 DECORATIVE METAL RAILINGS

PART 1 - GENERAL

1.1 RELATED DOCUMENTS

A. Drawings and general provisions of the Contract, including General and Supplementary Conditions and Division 1 Specification Sections, apply to this Section.

1.2 SUMMARY

A. This Section includes the following:
1. Stainless-steel decorative railings with stainless-steel wire-rope guard infill.

1.3 PERFORMANCE REQUIREMENTS

A. All railings shall be supplied to conform to applicable sections of the following codes:
1. International Building Code
2. ADAAG

B. Structural Performance: Provide railings capable of withstanding the effects of gravity loads and the following loads and stresses within limits and under conditions indicated:
1. Handrails:
a. Uniform load of 50 lbf/ ft. applied in any direction.
b. Concentrated load of 200 lbf applied in any direction.
c. Uniform and concentrated loads need not be assumed to act concurrently.
2. Top Rails of Guards:
a. Uniform load of 50 lbf/ ft. applied in any direction.
b. Concentrated load of 200 lbf applied in any direction.
c. Uniform and concentrated loads need not be assumed to act concurrently.
3. Infill Area of Guards:
a. Horizontal concentrated load of 50 lbf applied to 1 sq. ft. at any point in system, including panels, intermediate rails, balusters, or other elements composing infill area. Load on infill area need not be assumed to act concurrently with loads on top rails.

C. Thermal Movements: Provide exterior railings that allow for thermal movements resulting from the following maximum change (range) in ambient and surface temperatures by preventing buckling, opening of joints, overstressing of components, failure of connections, and other detrimental effects. Base engineering calculation on surface temperatures of materials due to both solar heat gain and nighttime-sky heat loss.
1. Temperature Change (Range): 120 deg F, ambient; 180 deg F, material surfaces.

D. Control of Corrosion: Prevent galvanic action and other forms of corrosion by insulating metals and other materials from direct contact with incompatible materials.

1.4 SUBMITTALS

A. Product Data: For the following:
1. Manufacturer's product lines of mechanically connected railings.
2. Grout, anchoring cement, and paint products.

B. Shop Drawings: Include plans, elevations, sections, details, and attachments to other work.
   1. For installed products indicated to comply with design loads, include structural analysis data signed and sealed by the qualified professional engineer responsible for their preparation.

C. Samples for Initial Selection: For products involving selection of color, texture, or design.

D. Sustainable Design Submittals:
   1. Product Data: For recycled content, indicating postconsumer and preconsumer recycled content and cost.

E. Product Test Reports: Supplier shall submit calculations and test reports for complete system, including railing and infill panels. Calculations and test reports shall be stamped by a licensed PE. Test reports shall be in accordance with ASTM E 935.

1.5 QUALITY ASSURANCE

A. Source Limitations: Obtain each type of railing through one source from a single manufacturer.

B. Mock-up Panel: one section of railing system for verification.
   1. Approximate Size: ¼ to ½ of full size, using full size components.
   2. Approved mockups may become part of the completed work if undamaged at time of Substantial Completion.
   3. Approval of mockups does not constitute approval of deviations from the Contract Documents unless such deviations are specifically approved by Architect in writing.

1.6 PROJECT CONDITIONS

A. Field Measurements: Verify actual locations of walls and other construction contiguous with railings by field measurements before fabrication and indicate measurements on Shop Drawings.

1.7 COORDINATION AND SCHEDULING

A. Coordinate installation of anchorages for railings. Furnish setting drawings, templates, and directions for installing anchorages, including sleeves, concrete inserts, anchor bolts, and items with integral anchors, that are to be embedded in concrete or masonry. Deliver such items to project site in time for installation.

B. Schedule installation so wall attachments are made only to completed walls. Do not support railings temporarily by any means that do not satisfy structural performance requirements.

PART 2 - PRODUCTS

2.1 MANUFACTURERS

A. Stainless-Steel Decorative Railings:
   1. Manufacturers: Subject to compliance with requirements, available manufacturers offering products that may be incorporated into the Work include, but are not limited to the following:
      a. Architectural Metal Works.
      b. Architectural Railings & Grilles, Inc.
      c. Atlantis Rail Systems.
      d. Blum, Julius & Co., Inc.

e. Lavi Industries.
f. Livers Bronze Co.
g. Newman Brothers, Inc.
h. Tri Tech, Inc.
i. Wagner, R & B, Inc.
j. Wylie Systems.

B. Source Limitations: Obtain each type of railing from single source from single manufacturer.

C. Product Options: Information on Drawings and in Specifications establishes requirements for system's aesthetic effects and performance characteristics. Aesthetic effects are indicated by dimensions, arrangements, alignment, and profiles of components and assemblies as they relate to sightlines, to one another, and to adjoining construction. Performance characteristics are indicated by criteria subject to verification by one or more methods, including structural analysis, preconstruction testing, field testing, and in-service performance.
1. Do not modify intended aesthetic effects, as judged solely by Architect, except with Architect's approval. If modifications are proposed, submit comprehensive explanatory data to Architect for review.

2.2 METALS, GENERAL

A. Metal Surfaces, General: Provide materials with smooth surfaces, without seam marks, roller marks, rolled trade names, stains, discolorations, or blemishes.

B. Brackets, Flanges, and Anchors: Cast or formed metal of same type of material and finish as supported rails, unless otherwise indicated.

2.3 STAINLESS STEEL

A. Tubing: ASTM A 554, Grade MT 304.

B. Pipe: ASTM A 312/A 312M, Grade TP 304

C. Castings: ASTM A 743/A 743M, Grade CF 8 or CF 20

D. Sheet, Strip, Plate, and Flat Bar: ASTM A 666, Type 304.

E. Bars and Shapes: ASTM A 276, Type 304.

F. Wire Rope and Fittings:
1. Manufacturers: Subject to compliance with requirements, available manufacturers offering products that may be incorporated into the Work include, but are not limited to the following:
a. Cable Connection (The).
b. Carl Stahl DecorCable, Inc.
c. Esmet, Inc.
d. Feeney Wire Rope & Rigging.
e. Hayn Enterprises, LLC.
f. Johnson, C. Sherman, Co., Inc.
g. Ronstan International Inc.
h. Secosouth, Inc.
2. Wire Rope: 1-by-19 wire rope made from wire complying with ASTM A 492, Type 316.

3. Wire-Rope Fittings: Connectors of types indicated, fabricated from stainless steel, and with capability to sustain, without failure, a load equal to minimum breaking strength of wire rope with which they are used

2.4 FASTENERS

A. Fastener Materials: Unless otherwise indicated, provide the following::
1. Stainless-Steel Components: Type 304 stainless-steel fasteners.
2. Dissimilar Metals: Type 304 stainless-steel fasteners.

B. Post-Installed Anchors: Fastener systems with working capacity greater than or equal to the design load, according to an evaluation report acceptable to authorities having jurisdiction, based on ICC-ES AC193.

C. Structural Fasteners for Interconnecting Railing Components:
1. Rails shall be attached to posts by means of tee fittings equipped with anodized aluminum, tubular rivet nut and stainless steel socket head cap screw. All structural fasteners such as tee fittings shall be machined from 6063-T6 aluminum alloy. The fitting shall be internally connected to the rail by means of an internal dual tang that is expanded with a stainless steel, internal /external, reverse knurl, cup point socket head set screw. This combination shall prevent any loosening of the system due to changes in temperature or vibration. Systems using pop rivets or adhesives will not be accepted.

D. Material for Interior Locations: Carbon-steel components zinc plated to comply with ASTM B 633 or ASTM F 1941 (ASTM F 1941M), Class Fe/Zn 5, unless otherwise indicated.

2.5 MISCELLANEOUS MATERIALS

A. Nonshrink, Nonmetallic Grout: Factory-packaged, nonstaining, noncorrosive, nongaseous grout complying with ASTM C 1107/C 1107M. Provide grout specifically recommended by manufacturer for interior and exterior applications.

2.6 FABRICATION

A. General: Fabricate railings to comply with requirements indicated for design, dimensions, member sizes and spacing, details, finish, and anchorage, but not less than that required to support structural loads.

B. Assemble railings in the shop to greatest extent possible to minimize field splicing and assembly. Disassemble units only as necessary for shipping and handling limitations. Clearly mark units for reassembly and coordinated installation. Use connections that maintain structural value of joined pieces.

C. Make up wire-rope assemblies in the shop to field-measured dimensions with fittings machine swaged. Minimize amount of turnbuckle take-up used for dimensional adjustment so maximum amount is available for tensioning wire ropes. Tag wire-rope assemblies and fittings to identify installation locations and orientations for coordinated installation.

D. Cut, drill, and punch metals cleanly and accurately. Remove burrs and ease edges to a radius of approximately 1/32 inch, unless otherwise indicated. Remove sharp or rough areas on exposed surfaces.

E. Form work true to line and level with accurate angles and surfaces.

F. Cut, reinforce, drill, and tap as indicated to receive finish hardware, screws, and similar items.

G. Connections: Fabricate railings with non-welded connections, unless otherwise indicated. Welding will not be accepted.

H. Non-welded Connections: Connect members with concealed mechanical fasteners and fittings. Fabricate members and fittings to produce flush, smooth, rigid, hairline joints.
   1. Fittings to be of the internal double tang type activated by a reverse knurl cup point set screw. Reverse knurl is required to ensure that screw does not come loose under vibration. Plain cup point screws will not be accepted. Fittings to be fastened to pipe by means of a 5/16 in. tubular rivet nut and socket head cap screw.

I. Form changes in direction as follows:
   1. By flush bends or by inserting prefabricated flush-elbow fittings.

J. Form simple and compound curves by bending members in jigs to produce uniform curvature for each repetitive configuration required; maintain cross section of member throughout entire bend without buckling, twisting, cracking, or otherwise deforming exposed surfaces of components.

K. Close exposed ends of railing members with prefabricated end fittings.

L. Provide wall returns at ends of wall-mounted handrails, unless otherwise indicated. Close ends of returns unless clearance between end of rail and wall is 1/4 inch or less.

M. Brackets, Flanges, Fittings, and Anchors: Provide wall brackets, flanges, miscellaneous fittings, and anchors to interconnect railing members to other work, unless otherwise indicated. Flanges to be sand cast from aluminum alloy 535 with anodized finish and fastened directly to the post by means of two reverse knurl cup point set screws.

N. Fabricate anchorage devices capable of withstanding loads imposed by railings. Coordinate anchorage devices with supporting structure.

2.7 FINISHES, GENERAL

A. Comply with NAAMM's "Metal Finishes Manual for Architectural and Metal Products" for recommendations for applying and designating finishes.

B. Protect mechanical finishes on exposed surfaces from damage by applying a strippable, temporary protective covering before shipping.

C. Appearance of Finished Work: Variations in appearance of abutting or adjacent pieces are acceptable if they are within one-half of the range of approved samples. Noticeable variations in the same piece are not acceptable. Variations in appearance of other components are acceptable if they are within the range of approved Samples and are assembled or installed to minimize contrast.

D. Provide exposed fasteners with finish matching appearance, including color and texture, of railings.

2.8 STAINLESS-STEEL FINISHES

A. Surface Preparation: Remove tool and die marks and stretch lines, or blend into finish.

B. Polished Finishes: Grind and polish surfaces to produce uniform finish, free of cross Scratches.
   1. Run grain of directional finishes with long dimension of each piece.

C. Directional Satin Finish: No. 4.

D. When polishing is completed, passivate and rinse surfaces. Remove embedded foreign matter and leave surfaces chemically clean.

PART 3 - EXECUTION

3.1 EXAMINATION

A. Examine substrates to receive anchors. Locate reinforcements and mark locations if not already done.

3.2 INSTALLATION, GENERAL

A. Fit exposed connections together to form tight, hairline joints.

B. Perform cutting, drilling, and fitting required for installing railings. Set railings accurately in location, alignment, and elevation; measured from established lines and levels and free of rack.
   1. Do not weld, cut, or abrade surfaces of railing components that have been coated or finished after fabrication and that are intended for field connection by mechanical or other means without further cutting or fitting.
   2. Set posts plumb within a tolerance of 1/16 inch in 3 feet.
   3. Align rails so variations from level for horizontal members and variations from parallel with rake of steps and ramps for sloping members do not exceed 1/4 inch in 12 feet.

C. Corrosion Protection: Coat concealed surfaces of aluminum that will be in contact with grout, concrete, masonry, wood, or dissimilar metals, with a heavy coat of bituminous paint, or provide protective gaskets.

D. Adjust railings before anchoring to ensure matching alignment at abutting joints.

E. Fastening to In-Place Construction: Use anchorage devices and fasteners where necessary for securing railings and for properly transferring loads to in-place construction.

3.3 RAILING CONNECTIONS

A. Non-welded Connections: Use mechanical joints for permanently connecting railing components. Use wood blocks and padding to prevent damage to railing members and fittings. Seal recessed holes of exposed locking screws using plastic cement filler colored to match finish of railings

B. Expansion Joints: Install expansion joints at locations indicated but not farther apart than required to accommodate thermal movement. Provide slip-joint internal sleeve extending 2 inches beyond joint on either side, fasten internal sleeve securely to 1 side, and locate joint within 6 inches of post.

3.4 ANCHORING RAILING ENDS

A. Anchor railing ends to concrete and masonry with round flanges connected to railing ends and anchored to wall construction with anchors and bolts.

B. Anchor railing ends to metal surfaces with flanges bolted to metal surfaces and connected to railing ends using non-welded connections.

3.5 ATTACHING HANDRAILS TO WALLS

A. Attach handrails to wall with wall brackets. Provide brackets with 1-1/2-inch clearance from inside face of handrail and finished wall surface.

B. Locate brackets as indicated or, if not indicated, at spacing required to support structural loads.

C. Secure wall brackets to building construction as indicated, or if not indicated, as follows:
1. For concrete and solid masonry anchorage, use drilled-in expansion shields and hanger or lag bolts.
2. For hollow masonry anchorage, use toggle bolts.
3. Provide blocking between studs in stud wall construction.

3.6 ADJUSTING AND CLEANING

A. Clean stainless steel by washing thoroughly with clean water and soap and rinsing with clean water.

3.7 PROTECTION

A. Protect finishes of railings from damage during construction period with temporary protective coverings approved by railing manufacturer. Remove protective coverings at time of Substantial Completion.

B. Restore finishes damaged during installation and construction period so no evidence remains of correction work. Return items that cannot be refinished in the field to the shop; make required alterations and refinish entire unit, or provide new units.

END OF SECTION 057300