Replacement of Latrine and Shower Facilities
Monett Readiness Center
Monett, Missouri

GHN
ARCHITECTS + ENGINEERS
300 South Jefferson Avenue, Suite 301, Springfield, MO 65806
P: 417.869.0719 | F: 417.869.3044 | W: www.ghnae.com

OWNER: STATE OF MISSOURI
MICHAEL L. PARSON,
GOVERNOR

DEPARTMENT OF PUBLIC SAFETY
MISSOURI NATIONAL GUARD

PROJECT MANAGEMENT: OFFICE OF ADMINISTRATION
DIVISION OF FACILITIES MANAGEMENT,
DESIGN AND CONSTRUCTION

DESIGNER: GHN Architects+Engineers

PROJECT NUMBER: T2131-01

SITE NUMBER: 6279
ASSET NUMBER: 8136279004

G-001

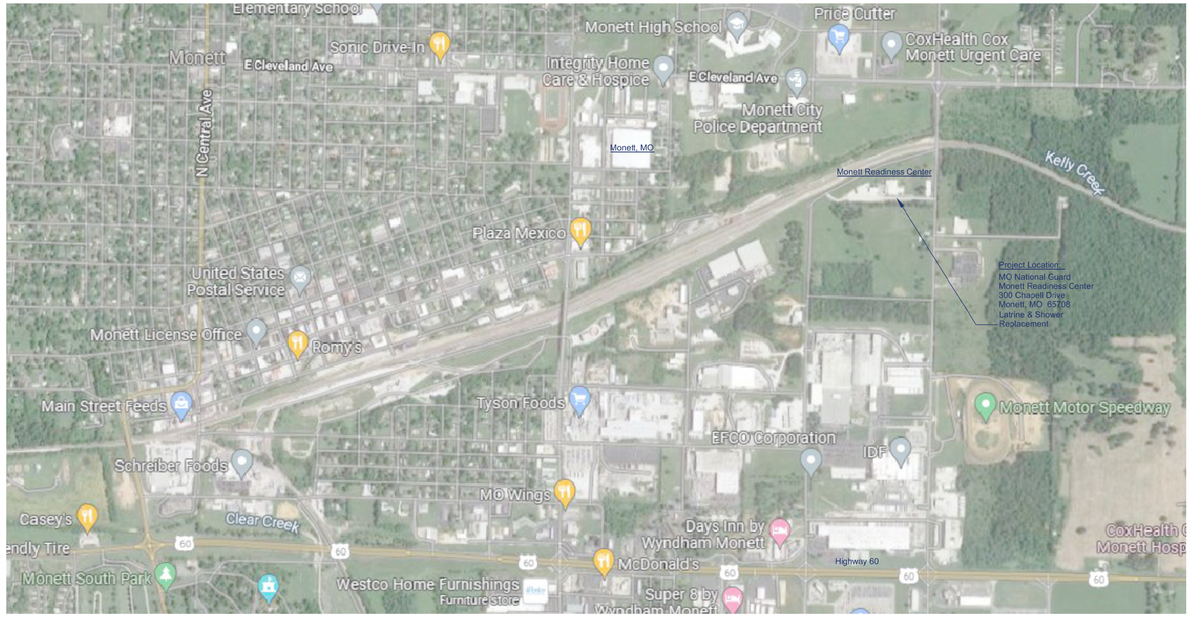

1 LOCATION MAP

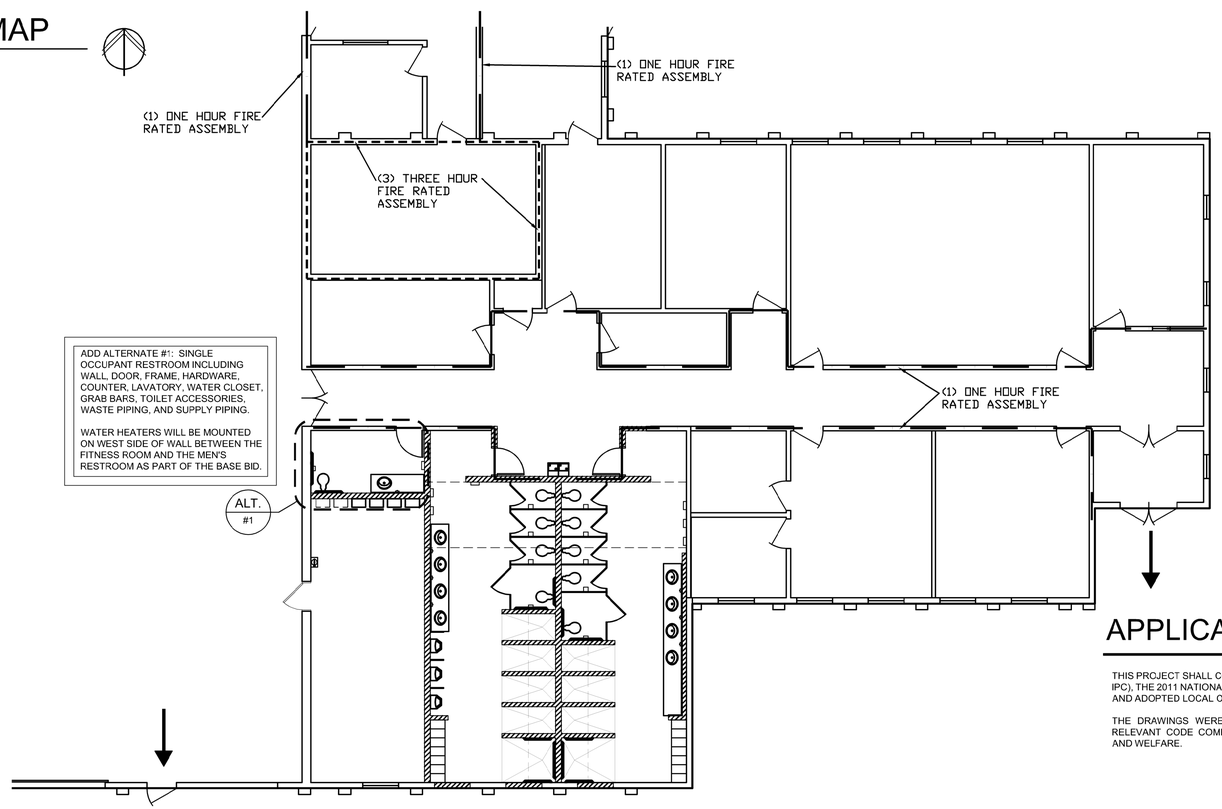

1 EGRESS PLAN

EXISTING OCCUPANCY UNCHANGED

SHEET INDEX:

G-001	COVER SHEET
G-002	SHEET INDEX & CODE SUMMARY
G-003	SYMBOLS & ABBREVIATIONS
A-101	FLOOR PLANS
A-201	INTERIOR ELEVATIONS
A-202	INTERIOR ELEVATIONS
A-203	INTERIOR ELEVATIONS
A-301	MISCELLANEOUS DETAILS
A-601	REFLECTED CEILING PLAN
P-001	PLUMBING LEGEND & GEN NOTES
P-101	WASTE & VENT PIPING PLANS
P-201	SUPPLY PIPING PLANS
P-301	PLUMBING SCHEDULES
M-001	HVAC GEN NOTES & LEGEND
M-101	HVAC PLANS
M-201	HVAC DETAILS
M-301	HVAC SCHEDULES
E-001	ELECTRICAL GEN NOTES & LEGEND
E-101	ELECTRICAL PLANS
E-201	ELECTRICAL SCHEDULES & DETAILS

APPLICABLE STANDARDS

THIS PROJECT SHALL COMPLY WITH THE 2012 ICC CODE SERIES (IBC, IFC, IMC, IPC), THE 2011 NATIONAL ELECTRIC CODE, THE 2009 ICC ANSI A117.1 STANDARD, AND ADOPTED LOCAL ORDINANCES, AS APPLICABLE.

THE DRAWINGS WERE PREPARED TO ILLUSTRATE DESIGN GEOMETRY AND RELEVANT CODE COMPLIANCE PERTAINING TO THE PUBLIC HEALTH, SAFETY, AND WELFARE.

BUILDING CODE SUMMARY

SECTION:	COMMENTS:
304.1	USE GROUP B (BUSINESS)
TABLE 601	CONSTRUCTION TYPE II-B & BUILDING IS NOT SPRINKLED
TABLE 803.9	GENERAL: INTERIOR WALL AND CEILING FINISHES SHALL BE A MINIMUM OF CLASS C, FLAME SPREAD 76-200; SMOKE DEVELOPED 0-450. RATED CORRIDORS AND EXIT ENCLOSURES SHALL BE A MINIMUM OF CLASS B.
906.1	ONE PORTABLE FIRE EXTINGUISHER TO BE PROVIDED
907.2.2	EXISTING FIRE ALARM SYSTEM TO REMAIN AND NEW DEVICES TO BE CONNECTED TO THE EXISTING SYSTEM.
TABLE 1004.1.2	TABULAR OCCUPANCY: BUSINESS: 21,223 SF / 150 SF GROSS = 141 PERSONS CODE OCCUPANCY: 511 PERSONS BASED ON 2012 ADDITION
TABLE 2902.1	WATER CLOSETS: 6 WOMEN, 6 MEN REQUIRED/PROVIDED LAVATORIES: 4 WOMEN, 4 MEN REQUIRED - 5 WOMEN & 4 MEN PROVIDED SHOWERS: 0 REQUIRED, 4 WOMEN, 5 MEN PROVIDED EWC: EXISTING QUANTITY UNCHANGED SERVICE SINK: EXISTING QUANTITY UNCHANGED

STATE OF MISSOURI
MICHAEL L. PARSON, GOVERNOR

David Michael Frohling
A-2010011354

GHN ARCHITECTS + ENGINEERS
300 South Jefferson Avenue, Suite 301, Springfield, MO 65806
P: 417.869.0719 | F: 417.869.3044 | W: www.ghnae.com

OFFICE OF ADMINISTRATION
DIVISION OF FACILITIES MANAGEMENT, DESIGN AND CONSTRUCTION

DEPT. OF PUBLIC SAFETY
MISSOURI NATIONAL GUARD

REPLACEMENT OF LATRINE AND SHOWER FACILITIES

MONETT READINESS CENTER
300 CHAPEL DRIVE
MONETT, MISSOURI

PROJECT # T2131-01
SITE # 6279
ASSET # 8136279004

REVISION:
DATE:
REVISION:
DATE:
REVISION:
DATE:
ISSUE DATE: 04/01/2022

CAD DWG FILE: XXX
DRAWN BY: DMF
CHECKED BY: DMF
DESIGNED BY: DMF

SHEET TITLE:
SHEET INDEX & CODE SUMMARY

SHEET NUMBER:
G-002

02 OF 20 SHEETS
APRIL 01, 2022

SYMBOLS LEGEND

NOTE: SYMBOLS SHOWN IN LEGENDS ARE TYPICAL AND ALL SYMBOLS MAY NOT OCCUR ON THIS PROJECT

1 A101 / 1 A101	SECTION REFERENCE. UPPER NUMBER INDICATES DETAIL NUMBER. LOWER NUMBER INDICATES SHEET NUMBER.
1 A101	DETAIL REFERENCE. UPPER NUMBER INDICATES DETAIL NUMBER. LOWER NUMBER INDICATES SHEET NUMBER.
1 A101	INTERIOR ELEVATION SYMBOL - UPPER NUMBER INDICATES ELEVATION NUMBER LOWER NUMBER INDICATES SHEET NO.
1/A101	CASEWORK ELEVATION. UPPER NUMBER INDICATES CASEWORK ELEVATION NUMBER. LOWER NUMBER INDICATES SHEET NUMBER
1, 4, A101, 2, 3	CASEWORK ELEVATION. CENTER NUMBER INDICATES SHEET NUMBER. OUTER NUMBERS INDICATES ELEVATION NUMBER
ROOM NAME 101 F1	ROOM NAME & NUMBER - UPPER NUMBER INDICATES ROOM NUMBER LOWER NUMBER INDICATES FINISH NOTES
1 1 1	KEY NOTE SYMBOLS
P1	WALL TYPE
1 / A	COLUMN GRID SYMBOLS (EXAMPLE; A-1, COLUMN AT INTERSECTION OF GRID, A AND 1)
	NORTH ARROW
ELEV. 100'-0"	LEVEL LINE (ELEVATION 100'-0")
	DATUM MARK
100	EXISTING GRADE LINE
100	NEW GRADE LINE
	PROPERTY LINE
100'-0"	FINISH SLAB ELEVATION
100'-0"	SPOT ELEVATION

SPECIAL NOTES:
IF A GRAPHIC SYMBOL OR AND ABBREVIATION USED ON THIS SET OF DOCUMENTS IS NOT IDENTIFIED IN THIS LEGEND THEN THE CONTRACTOR SHALL NOTIFY THE ARCHITECT FOR PROPER INTERPRETATION.

MATERIALS LEGEND - SECTIONS

	EARTH
	CRUSHED ROCK OR DRAINAGE FILL
	CONCRETE
	MASONRY BLOCK
2	CONTINUOUS WOOD BLOCKING OR ROUGH CARPENTRY
	NONCONTINOUS WOOD BLOCKING
	STEEL/OTHER METALS
	GLASS
	EXTERIOR INSULATION & FINISH SYSTEM
	RIGID INSULATION BOARD
	GYPSUM BOARD
	PLYWOOD

MATERIALS LEGEND - PARTITIONS - PLAN VIEW

	MASONRY BLOCK WALL
	CONCRETE WALL
	EXISTING WALL

MATERIALS LEGEND - ELEVATIONS

	MODULAR FACE BRICK
	EXTERIOR INSULATION & FINISH SYSTEM, PRECAST CONCRETE, OR GYP. BOARD
	SHEET METAL COPING OR TRIM
	GLASS
	MASONRY BLOCK

ABBREVIATIONS

ABV	ABOVE
AESS	ARCHITECTURAL EXPOSED STRUCTURAL STEEL
AFF	ABOVE FINISHED FLOOR
AFG	ABOVE FINISHED GRADE
AP	ACCESS PANEL
AC BD	ACOUSTICAL BOARD
AC PLAS	ACOUSTICAL PLASTER
AC TILE	ACOUSTICAL TILE
ADH	ADHESIVE
ADJ	ADJUSTABLE ADVANCED
ADS	DRAINAGE SYSTEMS
AGG	AGGREGATE
A/C	AIR CONDITIONING
ALT	ALTERNATE
AL	ALUMINUM
AB	ANCHOR BOLT
ANOD	ANODIZED
ARCH	ARCHITECT(URAL)
AD	AREA DRAIN
ASPH	ASPHALT
@	AT
BSMT	BASEMENT
BRG	BEARING
BIT	BITUMINOUS
BLK(G)	BLOCK(ING)
BD	BOARD
BM	BENCHARK
BS	BOTH SIDES
BOT	BOTTOM
BRK	BREAK
BRZ	BRONZE
BLDG	BUILDING
B/U	BUILT UP
BBD	BULLETIN BOARD
CAB	CABINET
CPT	CARPET(ED)
CI	CAST IRON
CST	CAST STONE
CB	CATCH BASIN
CLG	CEILING
CAP	CEILING ACCESS PANEL
CHT	CEILING HEIGHT
CEM	CEMENT
CER(T)	CERAMIC(TILE)
CHBD	CHALKBOARD
CIP	CORRIGATED IRON PIPE
CIR	CIRCLE
CMT	CERAMIC MOSAIC TILE
CMP	CORRUGATED METAL PIPE
CO	CLEANOUT
CLR	CLEAR(ANCE)
COL	COLUMN
COMP	COMPOSITION
CONC	CONCRETE
CMU	CONCRETE MASONRY UNIT
CONST	CONSTRUCTION
CONT	CONTINUOUS OR CONTINUE
CONTR	CONTRACTOR
CJ	CONTROL JOINT
CG	CORNER GUARD
CTR	COUNTER
CS	COUNTERSINK
CT	CURTAIN TRACK
DP	DAMPPROOFING
DTL	DETAIL
DIAG	DIAGONAL
DIAM	DIAMETER
DIM	DIMENSION
DISP	DISPENSER
DIV	DIVISION
DR	DOOR
DH	DOUBLE HUNG
DN	DOWN
DS	DOWNSPOUT
DT	DRAPERY TRACK
DWR	DRAWER
DWG	DRAWING
DF	DRINKING FOUNTAIN
D	DEPTH
EA	EACH
EW	EACH WAY
ELEC	ELECTRIC(AL)
EP	ELECTRICAL PANELBOARD
EWC	ELECTRICAL WATER COOLER
EL	ELEVATION
ELEV	ELEVATOR
EMER	EMERGENCY
EQ	EQUAL
EQUIP	EQUIPMENT
EXIST.	EXISTING
EB	EXPANSION BOLT
EJ	EXPANSION JOINT
EXP	EXPOSED
EXT	EXTERIOR
FIN	FINISH(ED)
FFE	FINISHED FLOOR ELEVATION
FA	FIRE ALARM
FE	FIRE EXTINGUISHER
FEC	FIRE EXTINGUISHER CABINET
FHS	FIRE HOSE STATION
FP	FIREPROOF(ING)
FRAP	FIRE RATED ACCESS PANEL
FLASH	FLASHING
FLR(G)	FLOOR(ING)
FCO	FLOOR CLEANOUT
FD	FLOOR DRAIN
FLUOR	FLUORESCENT
FTG	FOOTING
FND	FOUNDATION
FRA	FRESH AIR
FV	FEILD VERIFY
GA	GAUGE
GALV	GALVANIZED
GC	GENERAL CONTRACTOR
GL	GLASS, GLAZING
GCMU	GLAZED CONCRETE MASONRY UNITS
GST	GLAZED STRUCTURAL TILE
GB	GRAB BAR
GYP	GYPSUM
GFR	GYPSUM FIBER REINFORCED
GWB	GYPSUM WALL BOARD
H	HEIGHT
HBD	HARDBOARD
HCDF	HANDICAPPED DRINKING FOUNTAIN
HDF	HANDICAPPED DRINKING FOUNTAIN
HDWR	HARDWARE
HD	HEAD
HDR	HEADER
HTG	HEATING
HVAC	HEATING/VENTILATING/AIR COND
HGT	HEIGHT
HC	HOLLOW CORE
HM	HOLLOW METAL
HORIZ	HORIZONTAL
HB	HOSE BIBB
HWH	HOT WATER HEATER
INCL	INCLUDE(D), (ING)
ID	INSIDE DIAMETER
INSUL	INSULATE(D)
INT	INTERIOR
IWS	ICE & WATER SHIELD (BITUTHENE)
JT	JOINT
JST	JOIST
KO	KNOCKOUT
LAM	LAMINATE(D)
LAV	LAVATORY
LH	LEFT HAND
LT	LIGHT
LWC	LIGHTWEIGHT CONCRETE
LTL	LINTEL
LVR	LOUVER
LD	LOUVERED DRAPE
L	LENGTH
LP	LIGHT POLE
MH	MANHOLE
MANUF	MANUFACTURE(ER)
MATL	MATERIAL
MBC	METAL BUILDING COMPANY
MBL	MARBLE
MAS	MASONRY
MO	MASONRY OPENING
MAX	MAXIMUM
MECH	MECHANIC(AL)
MED CAB	MEDICINE CABINET
MBR	MEMBER
MTL	METAL
MOD BIT	MODIFIED BITUMEN
MP	METAL PANEL(S)
MIN	MINIMUM
MISC	MISCELLANEOUS
M.B.	MOISTURE BARRIER
MOV	MOVABLE
MTD	MOUNTED
MULL	MULLION
MEP	MECHANICAL/ELECTRICAL/PLUMBING
NAT	NATURAL
NOM	NOMINAL
NIC	NOT IN CONTRACT
NTS	NOT TO SCALE
OBS	OBSCURE
OC	ON CENTER(S)
OPNG	OPENING
OJ	OPEN-WEB JOIST
OD	OUTSIDE DIAMETER
OHE	OVERHEAD ELECTRIC
PNT	PAINT(ED)
PNL	PANEL
PTD	PAPER TOWEL DISPENSER
PTR	PAPER TOWEL RECEPTOR
PRTN	PARTITION
PVMT	PAVEMENT
PERF	PERFORATE(D)
PLAS	PLASTER
PLAM	PLASTIC LAMINATE
PLYWD	PLYWOOD
PVC	POLYVINYL CHLORIDE
PSF	POUNDS PER SQUARE FOOT
PSI	POUNDS PER SQUARE INCH
PREFAB	PREFABRICATE(D)
PREFIN	PREFINISHED
PL	PROPERTY LINE
PP	POWER POLE
QT	QUARRY TILE
RAD	RADIUS
REF	REFERENCE
REFR	REFRIGERATOR
REG	REGISTER
REINF	REINFORCE(D), (ING)
RCP	REINFORCED CONCRETE PIPE
REQD	REQUIRED
RA	RETURN AIR
REV	REVISION(S), REVISED
RH	RIGHT HAND
ROW	RIGHT OF WAY
R	RISER
RD	ROOF DRAIN
RFG	ROOFING
RM	ROOM
RO	ROUGH OPENING
RB	RUBBER BASE
RBT	RUBBER TILE
SCH (SCHED)	SCHEDULE
SECT	SECTION
SSK	SERVICE SINK
SHTG	SHEATHING
SHT	SHEET
SHWR	SHOWER
SIM	SIMILAR
SC	SOLID CORE
SPEC	SPECIFICATION(S)
SQ	SQUARE
SV	STACK VENT
SS	STAINLESS STEEL
STD	STANDARD
STA	STATION
STL	STEEL
STO	STORAGE
SD	STORM DRAIN
STR (STRUCT)	STRUCTURAL
SUSP	SUSPENDED
SYM	SYMMETRY(ICAL)
SYN	SYNTHETIC
TB	TACKBOARD
TEL	TELEPHONE
TV	TELEVISION
TEMP	TEMPERED
TERR	TERRAZZO
TG	TEMPERED GLASS
TH	THICK(NESS)
THRS	THRESHOLD
TLT	TOILET
TPD	TOILET PAPER DISPENSER
T&G	TONGUE AND GROOVE
TOW	TOP OF WALL
TOS	TOP OF STEEL
TOM	TOP OF MASONRY
TB	TOWEL BAR
T	TREAD
TYP	TYPICAL
UNFIN.	UNFINISHED
UND	UNLESS NOTED OTHERWISE
UR	URINAL
UGE	UNDERGROUND ELECTRIC
VERT	VERTICAL
VCT	VINYL COMPOSITION TILE
VB	VINYL BASE
VT	VINYL TILE
VWC	VINYL WALL COVERING
WSCT	WAINSCOT
WH	WALL HUNG
WC	WATER CLOSET
WP	WATERPROOFING
WS	WATERSTOP
WWF	WELDED WIRE FABRIC
WDW	WINDOW
W/O	WITHOUT
WD	WOOD
W	WIDTH

ABBREVIATIONS APPLY TO ARCHITECTURAL SHEETS ONLY AND ARE TYPICAL AND MAY OR MAY NOT OCCUR ON THIS PROJECT. IF AN ABBREVIATION FOUND ON DOCUMENTS IS NOT LISTED, CONTRACTOR SHALL CONTACT ARCHITECT FOR INTERPRETATION.

SPECIAL NOTES

1. IN THE EVENT THE CLIENT CONSENTS TO, ALLOWS, AUTHORIZES OR APPROVES OF CHANGES TO ANY PLANS, SPECIFICATIONS OR OTHER CONSTRUCTION DOCUMENTS, AND THESE CHANGES ARE NOT APPROVED IN WRITING BY THE DESIGN PROFESSIONAL, THE CLIENT RECOGNIZES THAT SUCH CHANGES AND THE RESULTS THEREOF ARE NOT THE RESPONSIBILITY OF THE DESIGN PROFESSIONAL. THEREFORE, THE CLIENT AGREES TO RELEASE THE DESIGN PROFESSIONAL FROM ANY LIABILITY ARISING FROM THE CONSTRUCTION, USE OR RESULT OF SUCH CHANGES. IN ADDITION, THE CLIENT AGREES TO THE FULLEST EXTENT PERMITTED BY LAW, TO INDEMNIFY AND HOLD THE DESIGN PROFESSIONAL HARMLESS FROM ANY DAMAGE, LIABILITY OR COST (INCLUDING REASONABLE ATTORNEY'S FEES AND COSTS OF DEFENSE) ARISING FROM SUCH CHANGES
2. THE PERSONAL SEAL OF THE REGISTERED ARCHITECT OR ENGINEER SHALL BE THE LEGAL EQUIVALENT OF HIS SIGNATURE WHENEVER & WHEREVER USED, AND THE OWNER OF THE SEAL SHALL AUTHENTICATE THIS SHEET AND THE SPECIFICATION SECTIONS PERTAINING TO THIS SHEET. RESPONSIBILITY SHALL BE DISCLAIMED FOR ALL OTHER PLANS, SPECIFICATIONS, ESTIMATE, REPORTS OR OTHER DOCUMENTS OR INSTRUMENTS RELATING TO OR INTENDED TO BE USED FOR ANY PART OR PARTS OF THE ARCHITECTURAL PROJECT.

GENERAL NOTES

1. NOTICE: DRAWINGS ARE NOT SET UP SPECIFICALLY ACCORDING TO TRADE AND EACH CONTRACTOR AND SUB-CONTRACTOR OR TRADE IS REQUIRED TO REVIEW THE DRAWINGS AS A WHOLE AND PROVIDE ANY MISC. ITEMS, MATERIALS, WORK, ETC, REQUIRED TO COMPLETE THE WORK AS SHOWN ON ALL THE DOCUMENTS. THIS REQUIREMENT APPLIES TO ALL TRADES. STRUCTURAL, MECHANICAL, ELECTRICAL AND PLUMBING REQUIREMENTS AND RELATED WORK ARE INDICATED THROUGHOUT THE SET OF DRAWINGS AND SHOULD BE REVIEWED WITH THE SPECIFIC MEP AND STRUCTURAL DRAWINGS FOR OVERALL SCOPE OF WORK.
2. THE GENERAL CONTRACTOR IS OBLIGATED TO INSPECT FOR EXISTING CONDITIONS & AVAILABLE INFORMATION PRIOR TO SUBMITTING A BID. REFER TO SPECIFICATIONS ALSO.
3. NOTIFY ARCHITECT IF EXISTING CONDITIONS DEVIATE SUBSTANTIALLY FROM THOSE INDICATED HEREIN. FIELD VERIFY EXISTING CONDITIONS BY DETAILED INSPECTION PRIOR TO BEGINNING CONSTRUCTION.
4. EXISTING UNDERGROUND INSTALLATIONS SUCH AS WATER MAINS/LINES, GAS MAINS/LINES, SEWER, TELEPHONE LINES, POWER LINES, AND BURIED STRUCTURES IN THE VICINITY OF THE WORK TO BE DONE HERE UNDER ARE INDICATED ON THE DRAWINGS ONLY TO THE EXTENT SUCH INFORMATION HAS BEEN MADE AVAILABLE TO OR DISCOVERED BY THE ENGINEER/ARCHITECT IN PREPARING THE DRAWINGS. THERE IS NO GUARANTEE AS TO THE ACCURACY OR COMPLETENESS OF SUCH INFORMATION, AND ALL RESPONSIBILITY FOR THE ACCURACY AND COMPLETENESS THEREOF IS EXPRESSLY DISCLAIMED. THE CONTRACTOR SHALL BE SOLELY RESPONSIBLE FOR LOCATING ALL EXISTING UNDERGROUND INSTALLATIONS, INCLUDING SERVICE CONNECTIONS, IN ADVANCE OF EXCAVATING OR TRENCHING, BY CONTACTING THE OWNERS THEREOF AND PROSPECTING. THE CONTRACTOR SHALL USE HIS OWN INFORMATION AND NOT RELY UPON ANY INFORMATION SHOWN ON THE DRAWINGS CONCERNING EXISTING UNDERGROUND INSTALLATIONS. ANY DELAY, ADDITIONAL WORK, OR EXTRA COST TO THE CONTRACTOR CAUSED BY OR RESULTING FROM DAMAGE TO EXISTING UNDERGROUND INSTALLATIONS SHALL NOT CONSTITUTE A CLAIM FOR EXTRA WORK, ADDITIONAL PAYMENT OR DAMAGES.
5. DRAWINGS ARE NOT TO BE SCALED. DIMENSIONAL DATA SHALL BE OBTAINED FROM WRITTEN INFORMATION ONLY. VERIFY ALL DIMENSIONS BEFORE PROCEEDING, ANY DIMENSIONAL DEVIATION FROM THAT SHOWN ON THE DRAWINGS, WHICH MAY AFFECT INTENT OF DESIGN OR PROPER INCORPORATION OF ELEMENTS, SHALL BE BROUGHT TO THE ARCHITECTS ATTENTION PROMPTLY AND RESOLUTION OBTAINED BEFORE PROCEEDING.
6. SHOULD A DISCREPANCY BETWEEN CONTRACT DOCUMENTS AND SPECIFICATIONS OCCUR, CONTRACTOR SHOULD IMMEDIATELY NOTIFY ARCHITECT FOR RESOLUTION BEFORE PROCEEDING WITH WORK.
7. ALL DIMENSIONS INDICATED IN CONTRACT DOCUMENTS ARE FROM FACE OF BLOCK TO FACE OF BLOCK FOR INTERIOR PARTITIONS, FACE OF EXISTING STRUCTURE OR FINISH, FACE OF CONCRETE OR BLOCK, OR TO STRUCTURAL LINE, EXCEPT AS NOTED OTHERWISE. EXTERIOR DIMENSIONS ARE TO FACE OF BLOCK OR FACE OF EIFS. DIMENSIONS OF EXISTING STRUCTURE, ETC. ARE ± AND SHOULD BE FIELD VERIFIED PRIOR TO COMMENCEMENT OF WORK AND ARCHITECT NOTIFIED OF ANY DISCREPANCIES.
8. GENERAL CONTRACTOR SHALL COORDINATE ALL MECHANICAL, ELECTRICAL, & PLUMBING WORK AND PROVIDE ALL NECESSARY CONSTRUCTION TO FACILITATE SAID WORK INCLUDING, BUT NOT LIMITED TO ROUGH OPENINGS, EQUIPMENT SUPPORTS, BACKING AND COORDINATION OF FINISH WORK, WHETHER OR NOT SPECIFICALLY INDICATED ON CONTRACT DOCUMENTS.
9. WHERE ITEMS/ASSEMBLIES ARE INDICATED TO BE REMOVED AND RELOCATED, THE REMOVAL INCLUDES ALL SURFACE MOUNTED BRACKETS, ANCHORAGE DEVICES AND SURFACE BLOCKING.
10. GENERAL CONTRACTOR SHALL COORDINATE AND PROVIDE NECESSARY TEMPORARY ENCLOSURE AND DUST CONTROL MEASURES TO MAINTAIN A CLEAN AND SECURE WORK ENVIRONMENT AND AREAS ADJACENT TO CONSTRUCTION ZONES. PROVIDE NECESSARY WEATHER PROTECTION DURING DEMOLITION AND CONSTRUCTION WORK.
11. ANY SURFACES THAT BECOME EXPOSED DUE TO REMOVING OF EQUIPMENT, CEILING, OR WALLS ARE TO BE REFINISHED AND PAINTED TO MATCH AND BLEND WITH SURROUNDING SURFACES.

STATE OF MISSOURI
MICHAEL L. PARSON,
GOVERNOR

MISSOURI ARCHITECT DAVID MICHAEL FROHLING NUMBER A-2010011354 ARCHITECT 2022 04 01

David Michael Frohling
A-2010011354

GHN ARCHITECTS + ENGINEERS
300 South Jefferson Avenue, Suite 301, Springfield, MO 65806
P: 417.869.0719 | F: 417.869.3044 | W: www.ghnae.com

OFFICE OF ADMINISTRATION
DIVISION OF FACILITIES MANAGEMENT, DESIGN AND CONSTRUCTION

DEPT. OF PUBLIC SAFETY
MISSOURI NATIONAL GUARD

REPLACEMENT OF LATRINE AND SHOWER FACILITIES

MONETT READINESS CENTER
300 CHAPEL DRIVE
MONETT, MISSOURI

PROJECT # T2131-01
SITE # 6279
ASSET # 8136279004

REVISION:
DATE:
REVISION:
DATE:
REVISION:
DATE:
ISSUE DATE: 04/01/2022

CAD DWG FILE: XXX
DRAWN BY: DMF
CHECKED BY: DMF
DESIGNED BY: DMF

SHEET TITLE:
SYMBOLS & ABBREVIATIONS

SHEET NUMBER:
G-003

03 OF 20 SHEETS
APRIL 01, 2022

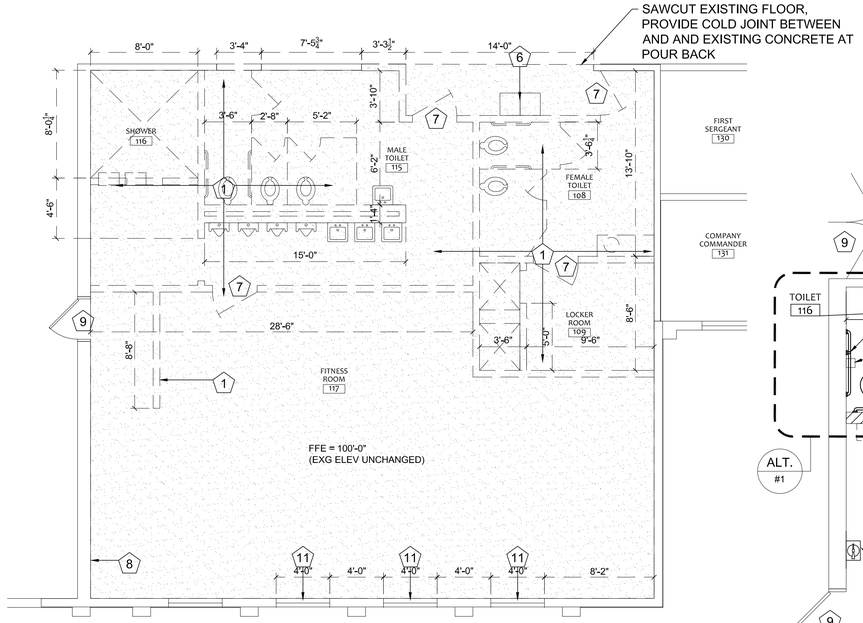

1 DEMOLITION FLOOR PLAN

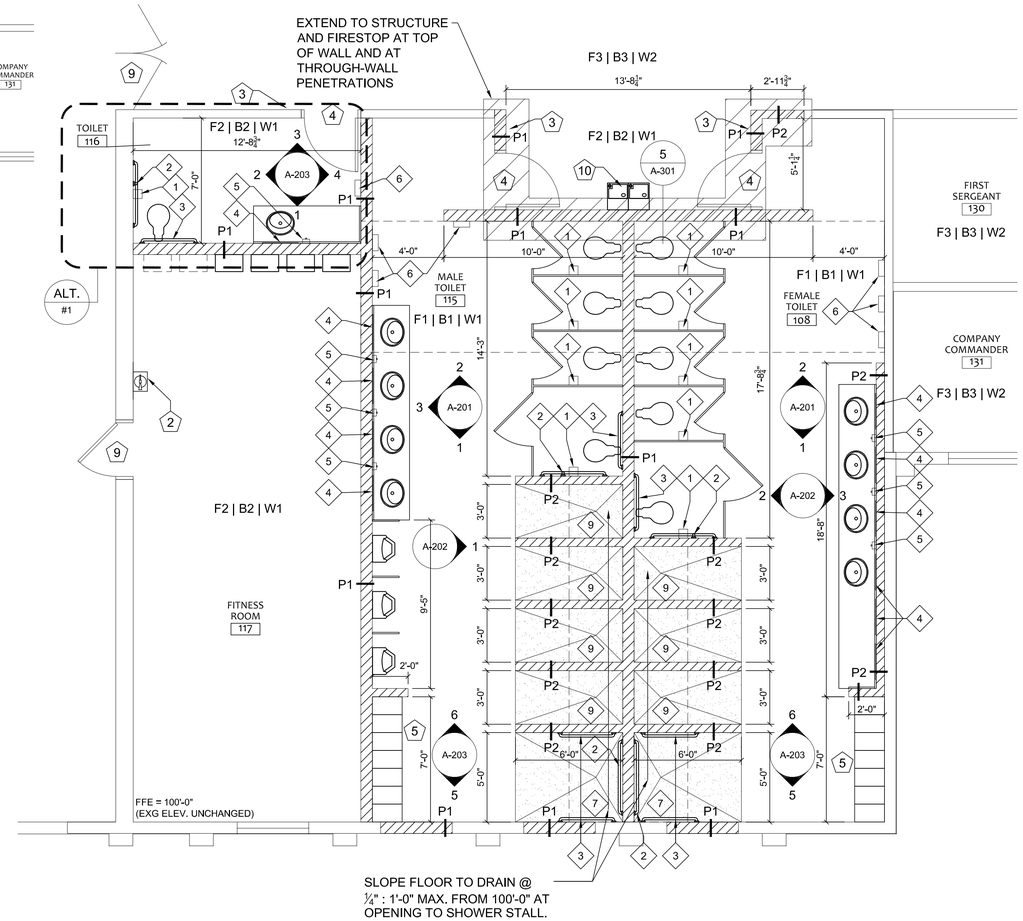

2 FLOOR PLAN

ADD ALTERNATE #1

SINGLE OCCUPANT TOILET 116 INCLUDING WALL, DOOR, FRAME, HARDWARE, COUNTER, LAVATORY, WATER CLOSET, GRAB BARS, TOILET ACCESSORIES, WASTE PIPING, AND SUPPLY PIPING.

WATER HEATERS WILL BE MOUNTED ON WEST SIDE OF WALL BETWEEN THE FITNESS ROOM 117 AND THE MALE TOILET 117 AS PART OF THE BASE BID.

FLOOR SLAB:

6" CONCRETE FLOOR SLAB (3,500 PSI) WITH #4s AT 18" O.C. EACH WAY (LAPPED PER ACI STANDARDS) ON 20 MIL. VAPOR BARRIER ON 4" BASE ROCK ON COMPACTED EARTH. TURN DOWN TO EXISTING FOOTINGS.

PARTITION SCHEDULE:

P1 8"x8"x16" CMU, RUNNING BOND, FILL UNGROUTED CORES WITH INSULATION
P2 6"x8"x16" CMU, RUNNING BOND

FINISH SCHEDULE:

F1 EPOXY COATING WITH AN INTEGRAL 4" COVE BASE
F2 SEALED CONCRETE
F3 EXISTING TO REMAIN

B1 INTEGRAL WITH EPOXY FLOORING SYSTEM
B2 NONE
B3 EXISTING TO REMAIN

W1 BLOCKFILLER WITH 2 COATS OF WATER BASED EPOXY PAINT
W2 EXISTING TO REMAIN

NOTE: EXISTING GLAZED TILE WAINSCOT TO REMAIN IN ALL AREAS WHERE INSTALLED ON WALLS NOT BEING DEMOLISHED. PREP & PAINT EXISTING CMU ABOVE GLAZED TILE IN FITNESS 117, TOILET116, MALE 115 & FEMALE 108.

CODE SUMMARY:

CODE: 2012 INTERNATIONAL BUILDING CODE
2012 INTERNATIONAL MECHANICAL CODE
2012 INTERNATIONAL PLUMBING CODE
2011 NATIONAL ELECTRIC CODE
2012 INTERNATIONAL FIRE CODE

OCCUPANCY:
B - BUSINESS

PROPOSED USE:
TRAINING & SKILL DEVELOPMENT

CONSTRUCTION TYPE:
TYPE IIB (NON-COMBUSTIBLE)

ALLOWABLE AREA: 23,000 SF

ACTUAL AREA: 21,230 SF (UNDER ROOF)

AUTOMATIC SPRINKLER SYSTEM: NONE EXISTING, CORRIDOR WALLS EXTEND TO DECK

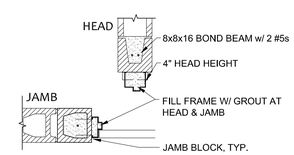

3 DOOR HEAD DETAIL

GENERAL NOTES:

1. SEE GENERAL NOTES ON SHEET G-002 FOR ADDITIONAL INFORMATION.

2. CONTRACTOR TO FIELD VERIFY ALL DIMENSIONS AT EXISTING CONDITIONS

3. CONTRACTOR TO PATCH AND REPAIR ANY DAMAGE TO AREA THAT OCCURS DURING REMOVAL OR INSTALLATION OF WORK.

KEY NOTES:

1. DEMO EXISTING RESTROOMS/SHOWERS COMPLETE, INCLUDING ASSOCIATED FIXTURES, LIGHTING, HVAC, FOUNDATIONS, & FLOOR SLAB.
2. SURFACE MOUNTED CABINET WITH 10#, TYPE ABC FIRE EXTINGUISHER AND BRACKET (MS1) MOUNT TOP OF CABINET AT 54" AFF.
3. TACTILE, BRAILLE, RESTROOM SIGN, MOUNT BOTTOM OF SIGN AT 48" AFF.
4. 3'-0"x7'-0" FIRE RATED HOLLOW METAL INSULATED DOOR WITH SOLID GROUTED FIRE RATED HOLLOW METAL FRAME (2" JAMBS & 4" HEAD), PROVIDE PASSAGE LATCHSET (PRIVACY AT TLT 116), 3 NON-REMOVABLE HINGES, PERIMETER SEALS, ADA COMPLIANT THRESHOLD, CLOSER, HALF HIGH KICK PLATE, AND WALL STOP (2 - L2, H1, C1, K1, T1, PS1, S1); (1 - L1, H1, C1, K1, T1, PS1, S1).
5. METAL LOCKERS WITH SLOPED TOP. PROVIDE DOUBLE TIER LOCKERS IN CENTER WITH FULL HEIGHT LOCKERS AT ENDS, SEE INTERIOR ELEVATIONS.
6. REMOVE EXISTING ELECTRIC WATER COOLERS, SALVAGE FOR REINSTALL.
7. REMOVE EXISTING DOOR AND FRAME.
8. BLANK OFF THROUGH WALL LOUVER - SEE MECHANICAL.
9. EXISTING DOOR AND FRAME TO REMAIN.
10. REINSTALLED ELECTRIC WATER COOLERS.
11. DEMO EXISTING WINDOW AND INFILL OPENING WITH CMU AND STUCCO TO MATCH EXISTING TEXTURE & COLOR. FILL CORES WITH FOAM IN PLACE INSULATION.

TOILET & BATH ACCESSORIES

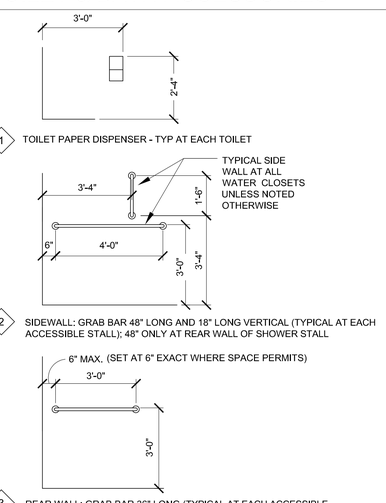

4. 24"W x 36"H FRAMED MIRROR
5. WALL MOUNTED SOAP DISPENSER
6. PAPER TOWEL DISPENSER
7. ADA SHOWER WITH CURTAIN/ROD; SEE PLUMBING FIXTURE SCHEDULE
8. ROBE HOOK MOUNTED AT 54" AFF. FIELD LOCATE - ONE IN EACH SHOWER.
9. SHOWER WITH CURTAIN/ROD; SEE PLUMBING FIXTURE SCHEDULE
10. TOWEL BAR. FIELD LOCATE - ONE IN EACH SHOWER.

STATE OF MISSOURI
MICHAEL L. PARSON,
GOVERNOR

David Michael Frohling
A-2010011354

GHN ARCHITECTS + ENGINEERS
300 South Jefferson Avenue, Suite 301, Springfield, MO 65806
P: 417.869.0719 | F: 417.869.3044 | W: www.ghnae.com

OFFICE OF ADMINISTRATION
DIVISION OF FACILITIES MANAGEMENT, DESIGN AND CONSTRUCTION

DEPT. OF PUBLIC SAFETY
MISSOURI NATIONAL GUARD

REPLACEMENT OF LATRINE AND SHOWER FACILITIES

MONETT READINESS CENTER
300 CHAPEL DRIVE
MONETT, MISSOURI

PROJECT # T2131-01
SITE # 6279
ASSET # 8136279004

REVISION:
DATE:
REVISION:
DATE:
REVISION:
DATE:
ISSUE DATE: 04/01/2022

CAD DWG FILE: XXX
DRAWN BY: DMF
CHECKED BY: DMF
DESIGNED BY: DMF

SHEET TITLE:
FLOOR PLANS

SHEET NUMBER:
A-101

04 OF 20 SHEETS
APRIL 01, 2022

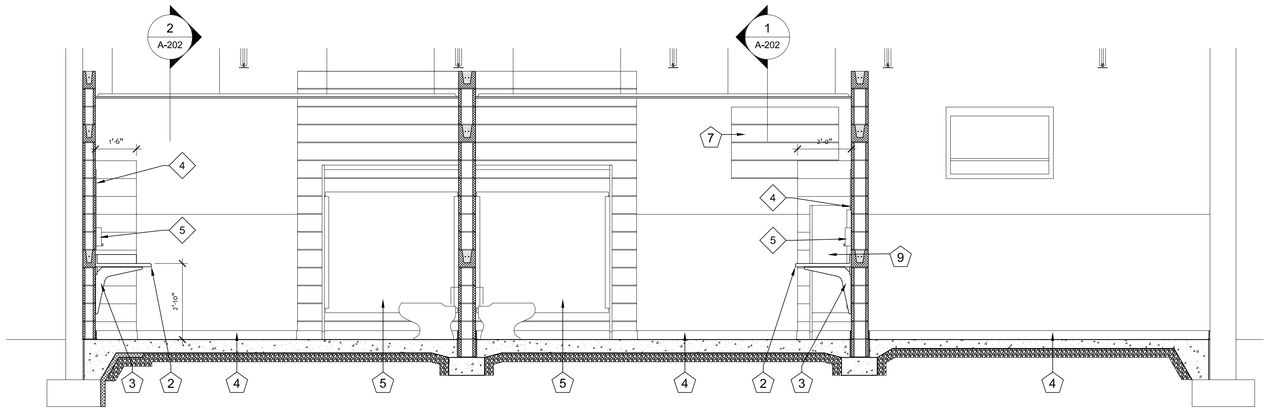

1 INTERIOR ELEVATION

0 6" 1' 2' 3' 4'

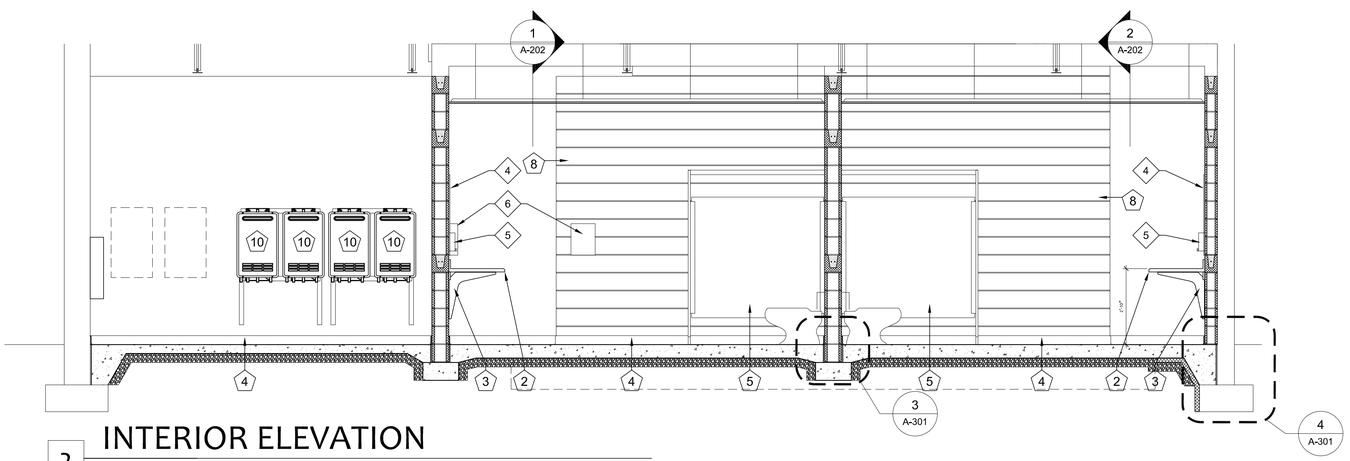

2 INTERIOR ELEVATION

0 6" 1' 2' 3' 4'

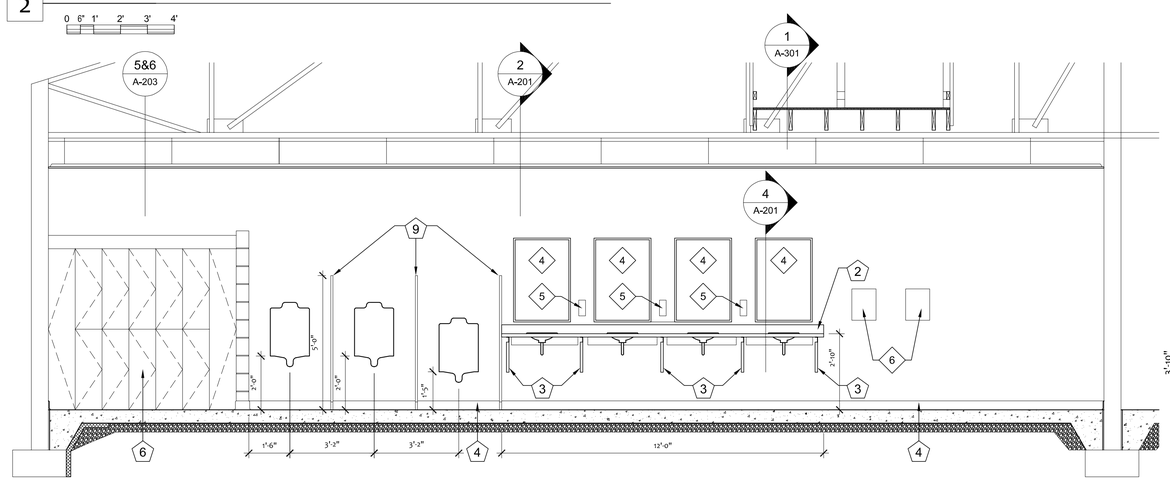

3 INTERIOR ELEVATION

0 6" 1' 2' 3' 4'

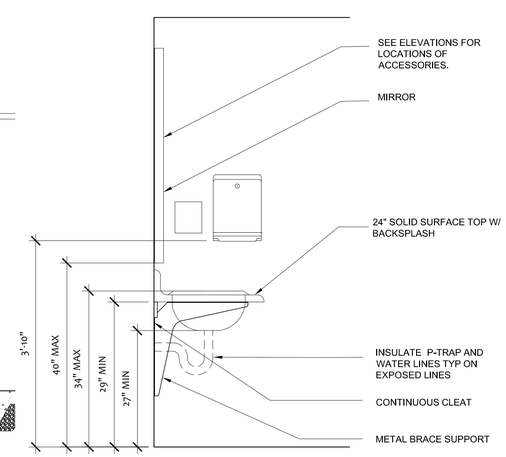

4 DETAIL SECTION

GENERAL NOTES:

1. SEE GENERAL NOTES ON SHEET G-003 FOR ADDITIONAL INFORMATION.

2. CONTRACTOR TO FIELD VERIFY ALL DIMENSIONS AT EXISTING CONDITIONS

3. CONTRACTOR TO PATCH AND REPAIR ANY DAMAGE TO AREA THAT OCCURS DURING REMOVAL OR INSTALLATION OF WORK.

KEY NOTES:

COPIED ON A201-A203 BUT NOT USED ON ALL SHEETS

1. PAINTED HOLLOW METAL DOOR AND FRAME.
2. SOLID SURFACE COUNTERTOP WITH SEPARATE SIDESPLASHES AND BACKSPLASH.
3. METAL COUNTERTOP BRACKET.
4. 4" INTEGRAL COVE BASE (PART OF EPOXY FLOORING SYSTEM).
5. FLOOR MOUNTED OVERHEAD BRACED SOLID PHENOLIC TOILET PARTITIONS.
6. FLOOR MOUNTED METAL LOCKERS WITH SLOPED TOP
7. REMOVE EXISTING WINDOW AND INFILL OPENING WITH CMU AND STUCCO TO MATCH EXISTING. FILL CORES WITH FOAM IN PLACE INSULATION (3 LOCATIONS).
8. EXTEND CMU WALL TO STRUCTURE AND FIRECAULK TOP OF WALL.
9. 48"x18" URINAL SCREEN. FLOOR BRACED, WALL HUNG WITH CONTINUOUS BRACKET.
10. WALL MOUNTED, INSTANTANEOUS WATER HEATER.

TOILET & BATH ACCESSORIES

COPIED ON A201-A203 BUT NOT USED ON ALL SHEETS

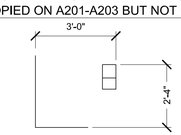

1. TOILET PAPER DISPENSER - TYP AT EACH TOILET

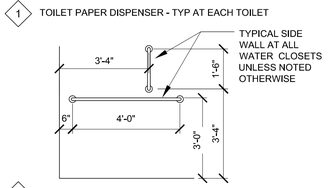

2. SIDEWALL: GRAB BAR 48" LONG AND 18" LONG VERTICAL (TYPICAL AT EACH ACCESSIBLE STALL); 48" ONLY AT REAR WALL OF SHOWER STALL

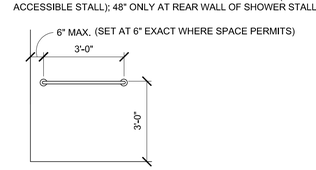

3. REAR WALL: GRAB BAR 36" LONG (TYPICAL AT EACH ACCESSIBLE STALL) PROVIDE ON SIDE WALLS OF SHOWER
4. 24"W x 36"H FRAMED MIRROR
5. WALL MOUNTED SOAP DISPENSER
6. PAPER TOWEL DISPENSER
7. ADA SHOWER WITH ROD AND CURTAIN HOOKS; SEE PLUMBING FIXTURE SCHEDULE (CURTAIN N.I.C.)
8. ROBE HOOK MOUNTED AT 54" AFF. FIELD LOCATE - ONE IN EACH SHOWER.
9. SHOWER WITH CURTAIN/ROD; SEE PLUMBING FIXTURE SCHEDULE
10. TOWEL BAR. FIELD LOCATE - ONE IN EACH SHOWER.

STATE OF MISSOURI
MICHAEL L. PARSON, GOVERNOR

David Michael Frohling
A-2010011354

GHN ARCHITECTS + ENGINEERS
300 South Jefferson Avenue, Suite 301, Springfield, MO 65806
P: 417.869.0719 | F: 417.869.3044 | W: www.ghnae.com

OFFICE OF ADMINISTRATION
DIVISION OF FACILITIES MANAGEMENT, DESIGN AND CONSTRUCTION

DEPT. OF PUBLIC SAFETY
MISSOURI NATIONAL GUARD

REPLACEMENT OF LATRINE AND SHOWER FACILITIES

MONETT READINESS CENTER
300 CHAPEL DRIVE
MONETT, MISSOURI

PROJECT # T2131-01
SITE # 6279
ASSET # 8136279004

REVISION:
DATE:
REVISION:
DATE:
REVISION:
DATE:
ISSUE DATE: 04/01/2022

CAD DWG FILE: XXX
DRAWN BY: DMF
CHECKED BY: DMF
DESIGNED BY: DMF

SHEET TITLE:

INTERIOR ELEVATIONS

SHEET NUMBER:

A-201

05 OF 20 SHEETS
APRIL 01, 2022

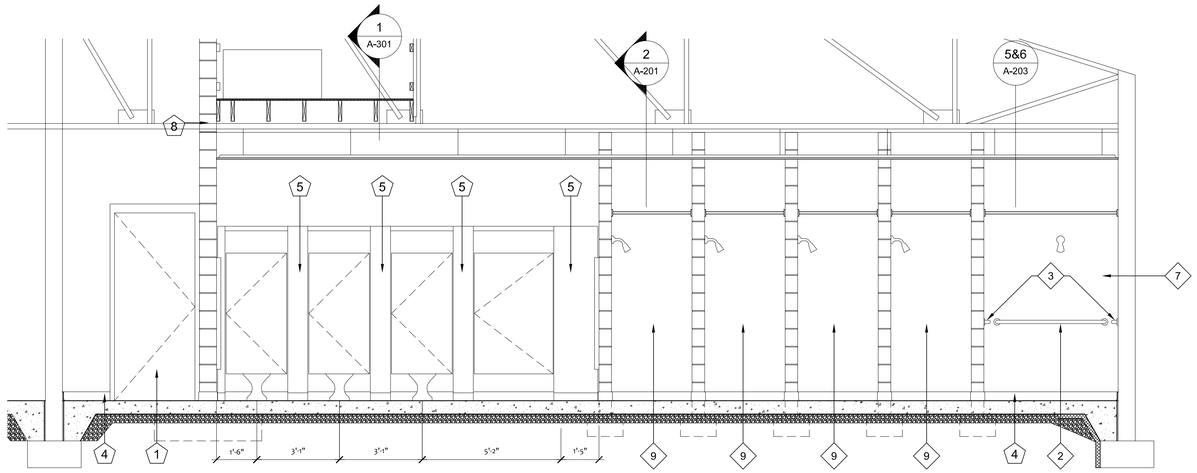

1 INTERIOR ELEVATION

0 6" 1' 2' 3' 4'

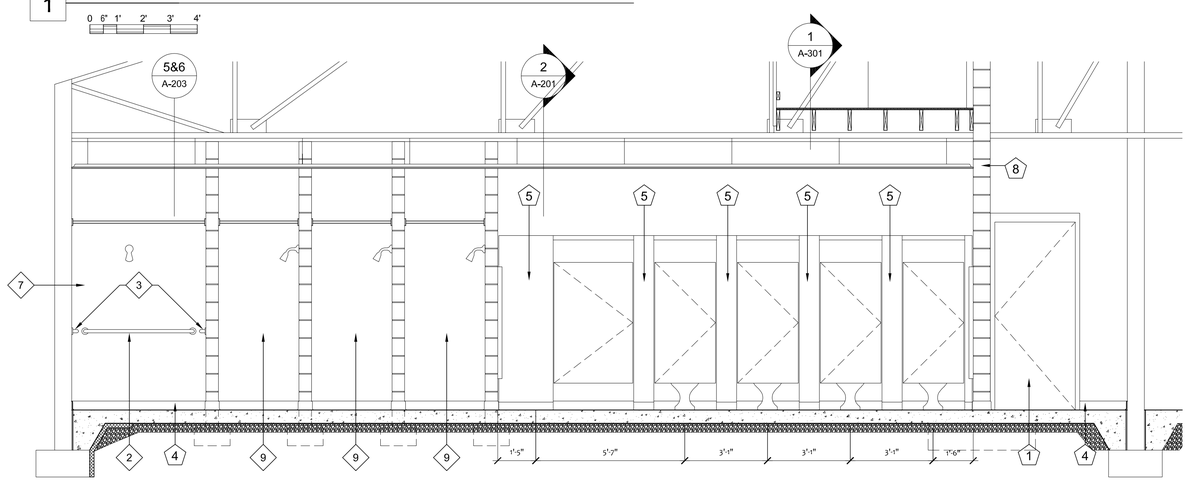

2 INTERIOR ELEVATION

0 6" 1' 2' 3' 4'

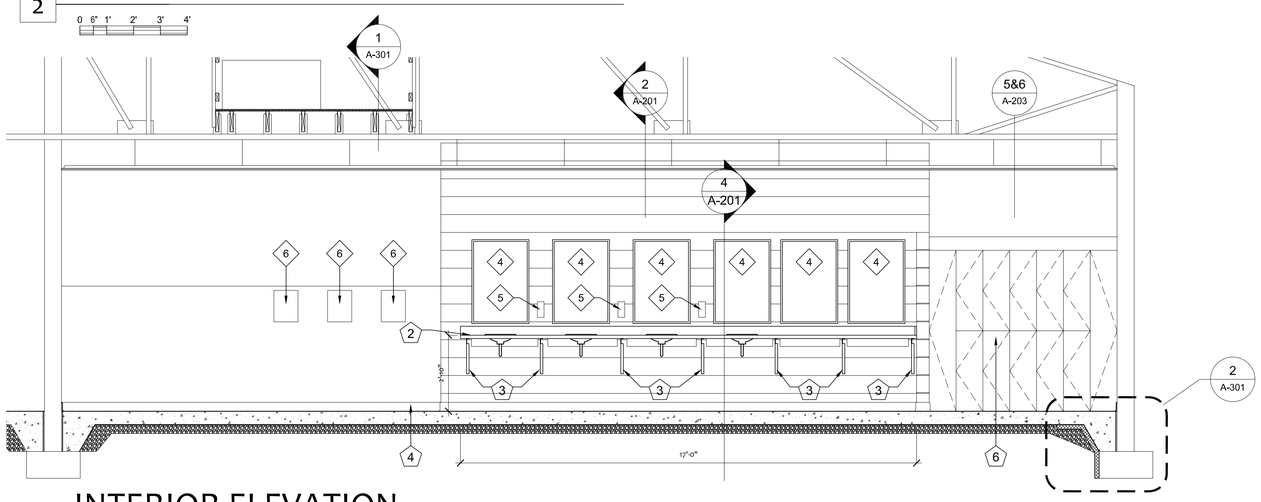

3 INTERIOR ELEVATION

0 6" 1' 2' 3' 4'

GENERAL NOTES:

1. SEE GENERAL NOTES ON SHEET G-003 FOR ADDITIONAL INFORMATION.

2. CONTRACTOR TO FIELD VERIFY ALL DIMENSIONS AT EXISTING CONDITIONS

3. CONTRACTOR TO PATCH AND REPAIR ANY DAMAGE TO AREA THAT OCCURS DURING REMOVAL OR INSTALLATION OF WORK.

KEY NOTES:

COPIED ON A201-A203 BUT NOT USED ON ALL SHEETS

1. PAINTED HOLLOW METAL DOOR AND FRAME.
2. SOLID SURFACE COUNTERTOP WITH SEPARATE SIDESPLASHES AND BACKSPLASH.
3. METAL COUNTERTOP BRACKET.
4. 4" INTEGRAL COVE BASE (PART OF EPOXY FLOORING SYSTEM).
5. FLOOR MOUNTED OVERHEAD BRACED SOLID PHENOLIC TOILET PARTITIONS.
6. FLOOR MOUNTED METAL LOCKERS WITH SLOPED TOP
7. REMOVE EXISTING WINDOW AND INFILL OPENING WITH CMU AND STUCCO TO MATCH EXISTING. FILL CORES WITH FOAM IN PLACE INSULATION (3 LOCATIONS).
8. EXTEND CMU WALL TO STRUCTURE AND FIRECAULK TOP OF WALL.
9. 48"x18" URINAL SCREEN. FLOOR BRACED, WALL HUNG WITH CONTINUOUS BRACKET.
10. WALL MOUNTED, INSTANTANEOUS WATER HEATER.

TOILET & BATH ACCESSORIES

COPIED ON A201-A203 BUT NOT USED ON ALL SHEETS

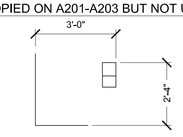

1. TOILET PAPER DISPENSER - TYP AT EACH TOILET

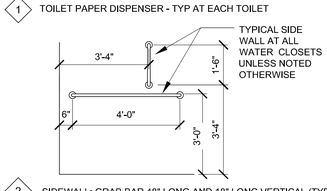

2. SIDEWALL: GRAB BAR 48" LONG AND 18" LONG VERTICAL (TYPICAL AT EACH ACCESSIBLE STALL); 48" ONLY AT REAR WALL OF SHOWER STALL

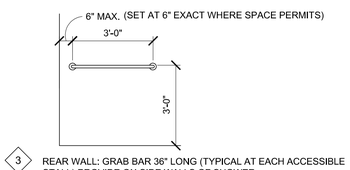

3. REAR WALL: GRAB BAR 36" LONG (TYPICAL AT EACH ACCESSIBLE STALL) PROVIDE ON SIDE WALLS OF SHOWER
4. 24"W x 36"H FRAMED MIRROR
5. WALL MOUNTED SOAP DISPENSER
6. PAPER TOWEL DISPENSER
7. ADA SHOWER WITH ROD AND CURTAIN HOOKS; SEE PLUMBING FIXTURE SCHEDULE (CURTAIN N.I.C.)
8. ROBE HOOK MOUNTED AT 54" AFF. FIELD LOCATE - ONE IN EACH SHOWER.
9. SHOWER WITH CURTAIN/ROD; SEE PLUMBING FIXTURE SCHEDULE
10. TOWEL BAR. FIELD LOCATE - ONE IN EACH SHOWER.

STATE OF MISSOURI
MICHAEL L. PARSON,
GOVERNOR

David Michael Frohling
A-2010011354

GHN ARCHITECTS + ENGINEERS
300 South Jefferson Avenue, Suite 301, Springfield, MO 65806
P: 417.869.0719 | F: 417.869.3044 | W: www.ghnae.com

OFFICE OF ADMINISTRATION
DIVISION OF FACILITIES MANAGEMENT, DESIGN AND CONSTRUCTION

DEPT. OF PUBLIC SAFETY
MISSOURI NATIONAL GUARD

REPLACEMENT OF LATRINE AND SHOWER FACILITIES

MONETT READINESS CENTER
300 CHAPEL DRIVE
MONETT, MISSOURI

PROJECT # T2131-01
SITE # 6279
ASSET # 8136279004

REVISION:
DATE:
REVISION:
DATE:
REVISION:
DATE:
ISSUE DATE: 04/01/2022

CAD DWG FILE: XXX
DRAWN BY: DMF
CHECKED BY: DMF
DESIGNED BY: DMF

SHEET TITLE:
INTERIOR ELEVATIONS

SHEET NUMBER:
A-202

06 OF 20 SHEETS
APRIL 01, 2022

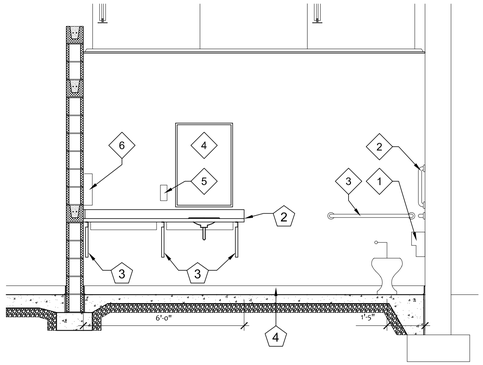

1 INTERIOR ELEVATION

0 6" 1' 2' 3' 4'

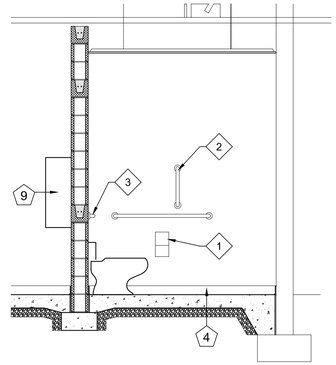

2 INTERIOR ELEVATION

0 6" 1' 2' 3' 4'

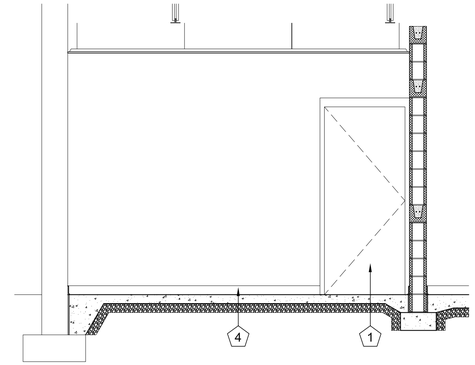

3 INTERIOR ELEVATION

0 6" 1' 2' 3' 4'

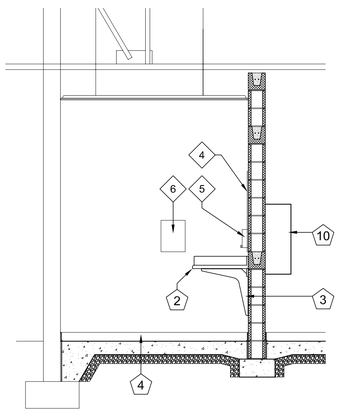

4 INTERIOR ELEVATION

0 6" 1' 2' 3' 4'

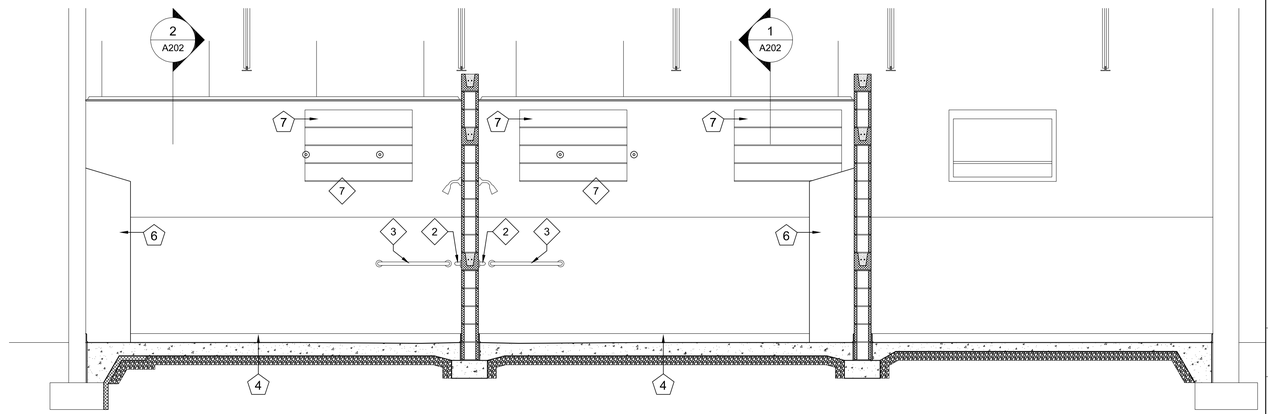

5 INTERIOR ELEVATION

0 6" 1' 2' 3' 4'

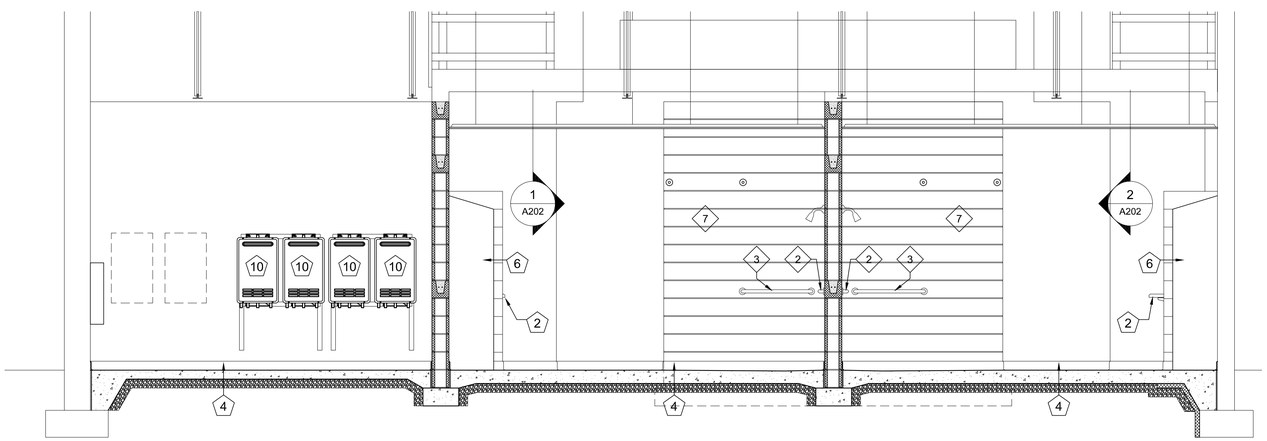

6 INTERIOR ELEVATION

0 6" 1' 2' 3' 4'

GENERAL NOTES:

1. SEE GENERAL NOTES ON SHEET G-003 FOR ADDITIONAL INFORMATION.

2. CONTRACTOR TO FIELD VERIFY ALL DIMENSIONS AT EXISTING CONDITIONS

3. CONTRACTOR TO PATCH AND REPAIR ANY DAMAGE TO AREA THAT OCCURS DURING REMOVAL OR INSTALLATION OF WORK.

KEY NOTES:

COPIED ON A201-A203 BUT NOT USED ON ALL SHEETS

1. PAINTED HOLLOW METAL DOOR AND FRAME.
2. SOLID SURFACE COUNTERTOP WITH SEPARATE SIDESPLASHES AND BACKSPLASH.
3. METAL COUNTERTOP BRACKET.
4. 4" INTEGRAL COVE BASE (PART OF EPOXY FLOORING SYSTEM).
5. FLOOR MOUNTED OVERHEAD BRACED SOLID PHENOLIC TOILET PARTITIONS.
6. FLOOR MOUNTED METAL LOCKERS WITH SLOPED TOP
7. REMOVE EXISTING WINDOW AND INFILL OPENING WITH CMU AND STUCCO TO MATCH EXISTING. FILL CORES WITH FOAM IN PLACE INSULATION (3 LOCATIONS).
8. EXTEND CMU WALL TO STRUCTURE AND FIRECAULK TOP OF WALL.
9. 48"x18" URINAL SCREEN. FLOOR BRACED, WALL HUNG WITH CONTINUOUS BRACKET.
10. WALL MOUNTED, INSTANTANEOUS WATER HEATER.

TOILET & BATH ACCESSORIES

COPIED ON A201-A203 BUT NOT USED ON ALL SHEETS

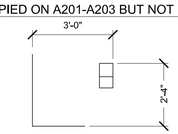

1. TOILET PAPER DISPENSER - TYP AT EACH TOILET

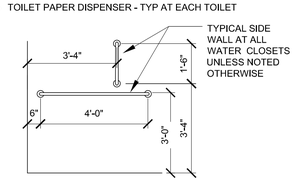

2. SIDEWALL: GRAB BAR 48" LONG AND 18" LONG VERTICAL (TYPICAL AT EACH ACCESSIBLE STALL); 48" ONLY AT REAR WALL OF SHOWER STALL

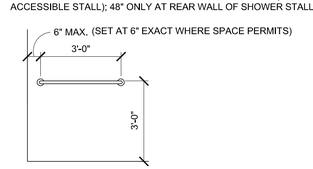

3. REAR WALL: GRAB BAR 36" LONG (TYPICAL AT EACH ACCESSIBLE STALL) PROVIDE ON SIDE WALLS OF SHOWER
4. 24"W x 36"H FRAMED MIRROR
5. WALL MOUNTED SOAP DISPENSER
6. PAPER TOWEL DISPENSER
7. ADA SHOWER WITH ROD AND CURTAIN HOOKS; SEE PLUMBING FIXTURE SCHEDULE (CURTAIN N.I.C.)
8. ROBE HOOK MOUNTED AT 54" AFF. FIELD LOCATE - ONE IN EACH SHOWER.
9. SHOWER WITH CURTAIN/ROD; SEE PLUMBING FIXTURE SCHEDULE
10. TOWEL BAR. FIELD LOCATE - ONE IN EACH SHOWER.

STATE OF MISSOURI
MICHAEL L. PARSON,
GOVERNOR

David Michael Frohling
A-2010011354

GHN ARCHITECTS + ENGINEERS
300 South Jefferson Avenue, Suite 301, Springfield, MO 65806
P: 417.869.0719 | F: 417.869.3044 | W: www.ghnae.com

OFFICE OF ADMINISTRATION
DIVISION OF FACILITIES MANAGEMENT, DESIGN AND CONSTRUCTION

DEPT. OF PUBLIC SAFETY
MISSOURI NATIONAL GUARD

REPLACEMENT OF LATRINE AND SHOWER FACILITIES

MONETT READINESS CENTER
300 CHAPEL DRIVE
MONETT, MISSOURI

PROJECT # T2131-01
SITE # 6279
ASSET # 8136279004

REVISION:
DATE:
REVISION:
DATE:
REVISION:
DATE:
ISSUE DATE: 04/01/2022

CAD DWG FILE: XXX
DRAWN BY: DMF
CHECKED BY: DMF
DESIGNED BY: DMF

SHEET TITLE:
INTERIOR ELEVATIONS

SHEET NUMBER:
A-203

07 OF 20 SHEETS
APRIL 01, 2022

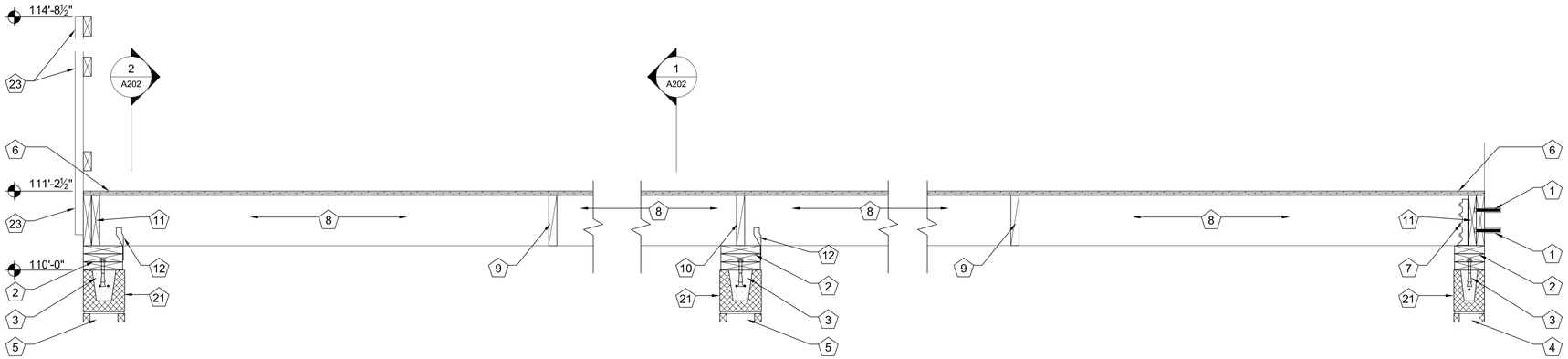

1 MECHANICAL PLATFORM SECTION

0 3" 6" 1' 18" 2'

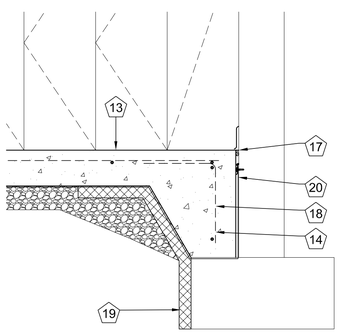

3,500 PSI CONCRETE	
FINISH FLOOR =	100'-0"
TOP OF EXG. FOOTING =	98'-6"±
BOTTOM OF EXG. FOOTING =	97'-6"±

2 EXTERIOR WALL FOOTING

0 3" 6" 1' 18" 2'

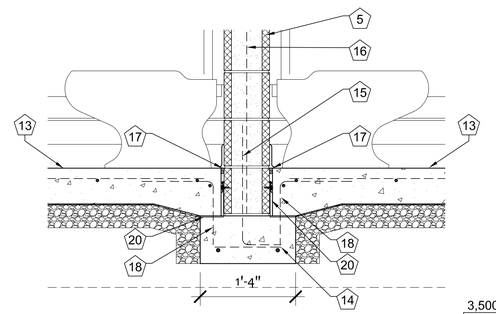

3,500 PSI CONCRETE	
FINISH FLOOR =	100'-0"
TOP OF FOOTING =	99'-4"
BOTTOM OF FOOTING =	98'-8"

3 TYP. INTERIOR 8" WALL FOOTING

0 3" 6" 1' 18" 2'

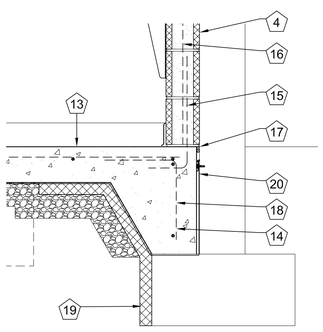

3,500 PSI CONCRETE	
FINISH FLOOR =	100'-0"
TOP OF EXG. FOOTING =	98'-6"±
BOTTOM OF EXG. FOOTING =	97'-6"±

4 6" WALL FUROUT FOOTING

0 3" 6" 1' 18" 2'

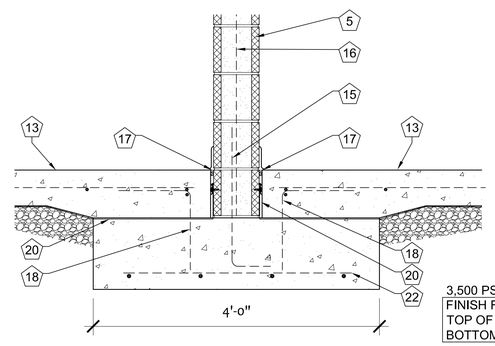

3,500 PSI CONCRETE	
FINISH FLOOR =	100'-0"
TOP OF FOOTING =	99'-4"
BOTTOM OF FOOTING =	98'-4"

5 FIRE RATED 8" WALL FOOTING

0 3" 6" 1' 18" 2'

CONCRETE MASONRY UNIT NOTES

1. CONCRETE MASONRY CONSTRUCTION SHALL CONFORM TO "BUILDING CODE REQUIREMENTS FOR MASONRY STRUCTURES" (TMS 402/ACI 530/ASCE 5) AND TO THE "SPECIFICATION FOR MASONRY STRUCTURES" (TMS 602/ACI 530.1/ASCE 6).
2. CONCRETE MASONRY UNITS (CMU) SHALL COMPLY WITH ASTM C90, GRADE N, TYPE I, F'_m = 1500 PSI. STANDARD WEIGHT CONCRETE BLOCK SHALL BE USED BELOW GRADE, HADITE OR APPROVED MEDIUM WEIGHT AGGREGATE SHALL BE USED ABOVE GRADE. SIZES AS INDICATED ON PLANS.
3. MORTAR SHALL BE TYPE 'S' WITH F'_m = 1900 PSI, EXCEPT BELOW GRADE TYPE 'M' SHALL BE USED, UNLESS NOTED OTHERWISE. MIX MORTAR FROM TYPE I PORTLAND CEMENT (TYPE III MAY BE USED FOR COLD WEATHER CONSTRUCTION), HYDRATED LIME (ASTM C207), AND AGGREGATE (ASTM C144).
4. ALL CELLS BELOW GRADE AND ALL CELLS TO RECEIVE STEEL REINFORCING SHALL BE GROUTED SOLID. ADDITIONAL CELLS TO RECEIVE GROUT ARE SHOWN IN DETAILS AND NOTES.
5. CONCRETE GROUT USED TO FILL VOIDS SHALL CONFORM TO ASTM C476 AND SHALL BE AS FOLLOWS (DO NOT USE MORTAR):
   - A. USE MINIMUM 5½ BAGS OF CEMENT PER CUBIC YARD.
   - B. MAXIMUM WATER/CEMENT RATIO BY WEIGHT SHALL BE 0.54.
   - C. WATER-REDUCING ADMIXTURE MEETING ASTM C494 SHALL BE USED TO PROVIDE SUFFICIENT FLOWABILITY TO READILY FILL VOIDS WITH A REASONABLE AMOUNT OF RODDING. NO ADDITIONAL WATER WILL BE ALLOWED TO IMPROVE FLOWABILITY.
   - D. AGGREGATE SHALL BE WELL-GRADED, ⅜" SIZE AND SMALLER.
   - E. ALTERNATE MIX DESIGNS WILL BE CONSIDERED IF SUBMITTED FOR APPROVAL. ALTERNATE MIX DESIGNS MUST SHOW SUFFICIENT FLOWABILITY CHARACTERISTICS AND 28-DAY COMPRESSIVE STRENGTH OF 3000 PSI.
7. ALL REINFORCING STEEL SHALL CONFORM TO ASTM A615, GRADE 60. LAP ALL SPLICES 48 BAR DIAMETERS, UNLESS NOTED OTHERWISE.
8. WHERE VERTICAL REINFORCING INTERSECTS HORIZONTAL REINFORCING, BOTH SHALL BE CONTINUOUS.
9. HORIZONTAL REINFORCING SHALL BE CONTINUOUS AT CORNERS WITH BEND OR SHALL HAVE CORNER BARS WITH EACH LEG EQUAL TO REQUIRED LAP LENGTH.
10. VERTICAL DOWEL BARS SHALL BE PLACED INTO FOUNDATION AT ALL LOCATIONS WHERE VERTICAL REINFORCING IS SPECIFIED FOR WALLS OR COLUMNS.
11. HORIZONTAL BOND BEAMS WITH 2- #5 BARS SHALL BE PROVIDED AT TOP AND BOTTOM OF WALL OPENINGS, AT STRUCTURALLY CONNECTED ROOF AND FLOOR LEVELS, AND AT THE TOP OF PARAPETS OR WALLS AND AS CALLED FOR IN PLANS AND NOTES. BOND BEAMS ABOVE AND BELOW WALL OPENINGS SHALL EXTEND 2'-0" MINIMUM BEYOND THE FACE OF OPENING, UNLESS NOTED OTHERWISE. BOND BEAMS SHALL NOT EXCEED A VERTICAL SPACING OF 8'-0" O.C., UNLESS NOTED OTHERWISE.
12. MAXIMUM HEIGHT OF GROUT POUR SHALL NOT EXCEED 4'-0" UNLESS CLEANOUT AND INSPECTION HOLE IS PROVIDED AT BOTTOM OF VOID.
13. GROUT AND REINFORCE WITH 1- #5 BAR ALL VERTICAL CORNER CELLS, ALL VERTICAL END CELLS, ONE CELL EACH SIDE OF CONTROL JOINTS, ONE CELL EACH SIDE OF ALL OPENINGS, AND SHALL NOT EXCEED A HORIZONTAL SPACING OF 4'-0" O.C. ALONG WALL SECTIONS, UNLESS SPECIFICALLY NOTED OTHERWISE.
14. TYPICAL MASONRY WALLS SHALL HAVE HORIZONTAL JOINTS REINFORCED WITH 9-GAUGE TRUSS OR LADDER TYPE JOINT REINFORCEMENT EQUAL TO "DUROWALL" AT 16" ON CENTER. PRE-FABRICATED CORNER OR TEE PIECES SHALL BE USED AT ALL INTERSECTING WALLS AND CORNERS.

GENERAL NOTES:

1. SEE GENERAL NOTES ON SHEET G-003 FOR ADDITIONAL INFORMATION.
2. CONTRACTOR TO FIELD VERIFY ALL DIMENSIONS AT EXISTING CONDITIONS
3. CONTRACTOR TO PATCH AND REPAIR ANY DAMAGE TO AREA THAT OCCURS DURING REMOVAL OR INSTALLATION OF WORK.

KEY NOTES:

1. ½" DIAMETER ANCHOR BOLTS SET INTO DRILLED & EPOXIED HOLES.
2. TRIPLE TOP PLATE (FRTW) ATOP CMU WALLS TO ALLOW FOR MECHANICAL PLATFORM TO BE CLEAR BOTTOM CHORD OF METAL TRUSSES.
3. ½" EXPANSION BOLT AT 16" O.C. (ONE IN EACH BLOCK) TO TIE PLATE TO TOP OF CMU.
4. 6x8x16 CMU RUNNING BOND WITH VERTICAL REINFORCEMENT AT 48" O.C., FILL REINFORCED CELLS SOLID WITH GROUT.
5. 8x8x16 CMU RUNNING BOND WITH VERTICAL REINFORCEMENT AT 48" O.C., FILL REINFORCED CELLS SOLID WITH GROUT.
6. ¾" T&G FRTW PLYWOOD, SCREWED & GLUED. SPACE FASTENERS AT 6" O.C.
7. 2x12 JOIST HANGAR, FILL ALL HOLES WITH FASTENERS.
8. 2x12 FRTW JOISTS AT 16" O.C.
9. 2x12 FRTW BLOCKING AT MID-SPAN.
10. 2x12 FRTW BLOCKING IN LINE WITH CMU PARTITION.
11. DOUBLE 2x12 FRTW RIM JOISTS.
12. HURRICANE CLIP AT EACH JOIST, SIMPSON H3 OR EQUAL.
13. 6" CONCRETE FLOOR SLAB WITH #4s AT 18" O.C. EACH WAY (LAP PER ACI STANDARD) ON 20 MIL. VAPOR BARRIER ON 4" BASE ROCK ON COMPACTED EARTH. TURN DOWN TO EXISTING FOOTING AT PERIMETER.
14. (2) #5s HORIZONTAL WITH #3 TIES AT 24" O.C.
15. #5 VERTICAL DOWELS AT 48" O.C., ALIGN WITH REINFORCED CORES OF CONCRETE MASONRY UNITS.
16. #5 VERTICAL DOWELS AT 48" O.C., FILL REINFORCED CELLS SOLID WITH GROUT.
17. ½" EXPANSION JOINT, REMOVE PLASTIC STRIP PRIOR TO SEALING.
18. #5 BENT DOWELS AT 18" O.C. TO TIE FLOOR REINFORCEMENT TO FOUNDATION.
19. 2" R-10 PERIMETER INSULATION, EXTEND 24" MINIMUM UNDER SLAB AND DOWN TO TOP OF FOOTING.
20. TURN UNDERSLAB MEMBRANE UP AND ATTACH TO THE MASONRY.
21. (2) #5s CONTINUOUS IN BOND BEAM AND COURSE BELOW BOND BEAM. 1 #5 CONTINUOUS AT 6" CMU.
22. (4) #5s HORIZONTAL WITH #4 TIES AT 12" O.C.
23. 2x4 FRTW RAILING: 3 HORIZONTAL RAILS WITH 2x4 VERTICALS AT 48" O.C.

STATE OF MISSOURI
MICHAEL L. PARSON,
GOVERNOR

David Michael Frohling
A-2010011354

GHN ARCHITECTS + ENGINEERS
300 South Jefferson Avenue, Suite 301, Springfield, MO 65806
P: 417.869.0719 | F: 417.869.3044 | W: www.ghnae.com

OFFICE OF ADMINISTRATION
DIVISION OF FACILITIES MANAGEMENT, DESIGN AND CONSTRUCTION

DEPT. OF PUBLIC SAFETY
MISSOURI NATIONAL GUARD

REPLACEMENT OF LATRINE AND SHOWER FACILITIES

MONETT READINESS CENTER
300 CHAPEL DRIVE
MONETT, MISSOURI

PROJECT # T2131-01
SITE # 6279
ASSET # 8136279004

REVISION:
DATE:
REVISION:
DATE:
REVISION:
DATE:
ISSUE DATE: 04/01/2022

CAD DWG FILE: XXX
DRAWN BY: DMF
CHECKED BY: DMF
DESIGNED BY: DMF

SHEET TITLE:

MISCELLANEOUS DETAILS

SHEET NUMBER:

A-301

08 OF 20 SHEETS
APRIL 01, 2022

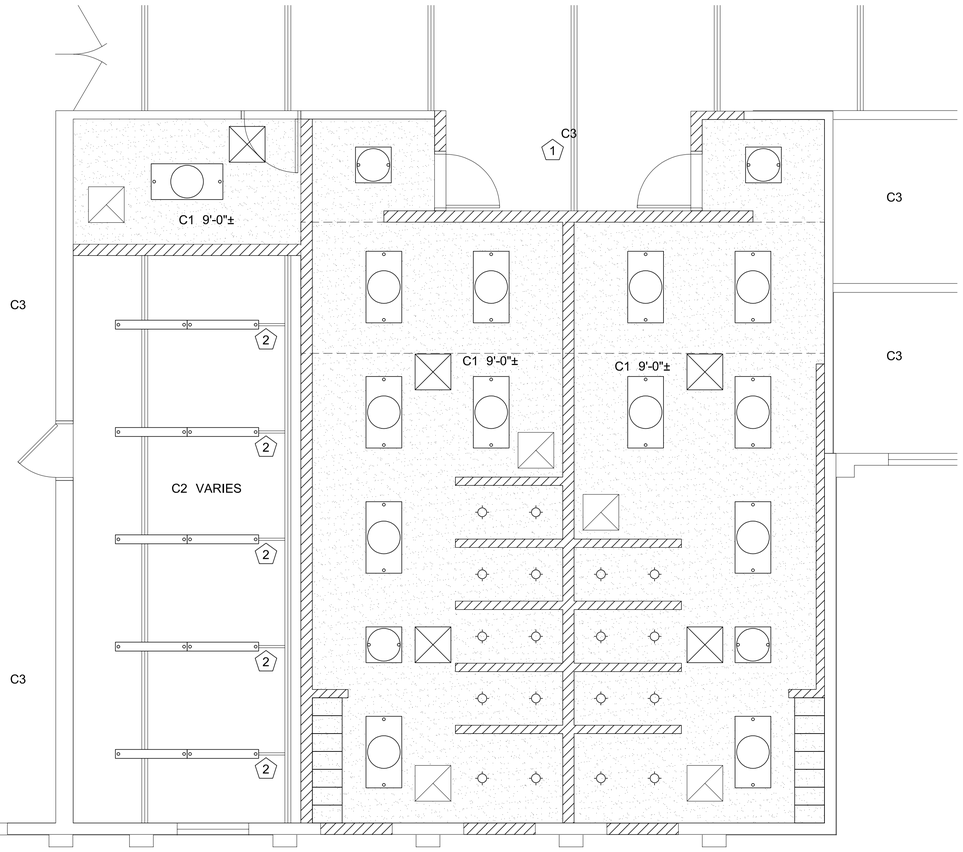

1 REFLECTED CEILING PLAN

0 6" 1' 2' 4' 6'

CEILING TYPES:

C1 PAINTED TYPE 'MR' GYPSUM BOARD ON DRYWALL SUSPENSION GRID
C2 OPEN TO STRUCTURE
C3 EXISTING TO REMAIN

CEILING LEGEND:

- 2X4 LED SURFACE MOUNTED LIGHT FIXTURE
- LED RECESSED DOWNLIGHT
- LED STRIP FIXTURE
- EXHAUST
- RETURN AIR
- SUPPLY AIR
- WALL MOUNTED EMERGENCY FIXTURE
- C1 7'-11" — CEILING TYPE / CEILING HEIGHT

GENERAL NOTES:

1. SEE GENERAL NOTES ON SHEET G-002 FOR ADDITIONAL INFORMATION.

2. CONTRACTOR TO FIELD VERIFY ALL DIMENSIONS AT EXISTING CONDITIONS

3. GUTTERS AND DOWNSPOUTS NOT SHOWN FOR CLARITY.

4. INFORMATION ON THIS SHEET GOVERNS THE LAYOUT OF THE CEILING GRID. SEE MECHANICAL AND ELECTRICAL SHEETS FOR FIXTURE TYPES, QUANTITIES, CIRCUIT, DUCTING, AND SCHEDULING

KEYNOTES:

1. TOUCH UP AND PAINT ITEMS ABOVE 10' TO MATCH EXISTING (BLACK).
2. UNISTRUT TO SUPPORT LIGHT FIXTURES, PAINT TO MATCH EXISTING TRUSSES.

STATE OF MISSOURI
MICHAEL L. PARSON, GOVERNOR

David Michael Frohling
A-2010011354

GHN ARCHITECTS + ENGINEERS
300 South Jefferson Avenue, Suite 301, Springfield, MO 65806
P: 417.869.0719 | F: 417.869.3044 | W: www.ghnae.com

OFFICE OF ADMINISTRATION
DIVISION OF FACILITIES MANAGEMENT, DESIGN AND CONSTRUCTION

DEPT. OF PUBLIC SAFETY
MISSOURI NATIONAL GUARD

REPLACEMENT OF LATRINE AND SHOWER FACILITIES

MONETT READINESS CENTER
300 CHAPEL DRIVE
MONETT, MISSOURI

PROJECT # T2131-01
SITE # 6279
ASSET # 8136279004

REVISION:
DATE:
REVISION:
DATE:
REVISION:
DATE:
ISSUE DATE: 04/01/2022

CAD DWG FILE: XXX
DRAWN BY: DMF
CHECKED BY: DMF
DESIGNED BY: DMF

SHEET TITLE:
REFLECTED CEILING PLAN

SHEET NUMBER:
A-601

09 OF 20 SHEETS
APRIL 01, 2022

PLUMBING GENERAL NOTES

A. ALL PLUMBING AND NATURAL GAS WORK SHALL COMPLY WITH THE LATEST EDITION OF THE "INTERNATIONAL PLUMBING CODE" AND THE "INTERNATIONAL MECHANICAL CODE", NFPA ADOPTED BY THE AUTHORITY(S) HAVING JURISDICTION, ALL STATE AND LOCAL CODES, AND PROJECT SPECIFICATIONS.

B. VISIT THE SITE AND VERIFY CONDITIONS PRIOR TO BIDDING.

C. VERIFY UTILITY LOCATIONS AND INVERTS, PRIOR TO ROUTING SERVICES. COORDINATE ALL BUILDING WASTE, SANITARY SEWER, STORM DRAINS, FIRE AND DOMESTIC WATER LINES AND NATURAL GAS LINES WITH CIVIL PLANS, REFER TO THE CIVIL PLANS FOR CONTINUATION OF ALL UTILITY LINES.

D. PAY ALL UTILITY FEES AND CHARGES AS PART OF BASE BID IN THE CONTRACT.

E. ALL DRAWINGS ARE DIAGRAMMATIC AND INDICATE THE GENERAL ARRANGEMENTS OR GEOMETRIC RELATIONSHIPS OF EQUIPMENT AND SERVICES. THEY ARE NOT INTENDED TO SPECIFY OR SHOW EVERY OFFSET, FITTING OR COMPONENT. DO NOT SCALE DRAWINGS. INFORMATION AND COMPONENTS SHOWN ON RISER DIAGRAMS OR DETAILS, BUT NOT SHOWN ON PLANS, AND VICE-VERSA, SHALL BE PROVIDED AS IF EXPRESSLY REQUIRED BY BOTH. SUBMIT A REQUEST FOR INFORMATION (RFI) IF INFORMATION CONFLICTS. DRAWINGS SPECIFIC TO THIS DISCIPLINE DO NOT LIMIT THE RESPONSIBILITY OF WORK REQUIRED BY CONTRACT DOCUMENTS. REFER TO ARCHITECTURAL, STRUCTURAL, ELECTRICAL AND OTHER DRAWINGS FOR ADDITIONAL INFORMATION.

F. THE DRAWINGS REFLECT A SYSTEM DESIGNED AROUND SPECIFIC REFERENCE PRODUCTS, THE SELECTION OF WHICH HAS IMPACTED THE DESIGNS OF OTHER TRADES (HVAC, ELECTRICAL, STRUCTURAL, ETC.). IF ALTERNATE MANUFACTURERS, FUEL SOURCES, SIZES, OR MODEL NUMBERS ARE SUBMITTED OR BID, IT IS THE RESPONSIBILITY OF THE CONTRACTOR(S) TO COORDINATE ALL DIFFERENCES PRIOR TO BID. NO EXTRAS WILL BE ALLOWED FOR CHANGES REQUIRED TO OTHER TRADES IF ALTERNATE EQUIPMENT IS BID OR INSTALLED AT THE CONTRACTORS OPTION.

G. EXCEPT WHERE MODIFIED BY SPECIFIC NOTATION TO THE CONTRARY, IT SHALL BE UNDERSTOOD THAT THE INDICATION AND/OR DESCRIPTION OF ANY ITEM, IN THE DRAWINGS OR SPECIFICATIONS OR BOTH, CARRIES WITH IT THE INSTRUCTION TO FURNISH AND INSTALL THE ITEM, REGARDLESS OF WHETHER OR NOT THIS INSTRUCTION IS EXPLICITLY STATED AS PART OF THE INDICATION OR DESCRIPTION.

H. COORDINATE WORK WITH THE WORK OF ALL TRADES ON THE PROJECT.

J. REFER TO SPECIFICATIONS FOR ACCEPTABLE MANUFACTURERS OF PLUMBING FIXTURES AND EQUIPMENT, AND PROPER APPLICATIONS OF SAME.

K. ALL PIPING PENETRATIONS OF THE FLOOR, RATED CEILING AND WALL MUST BE MADE WITH A METAL PIPE OR UL LISTED APPROVED DEVICES. FIRE STOP ALL PIPE PENETRATIONS THRU RATED WALLS. REFER TO THE ARCHITECTURAL DRAWINGS FOR LOCATIONS, RATINGS AND FIRE STOPPING DETAILS.

L. PROVIDE STOP VALVES ON EVERY FIXTURE ON BOTH HOT AND COLD WATER SUPPLY LINES. ESCUTCHEONS, FITTINGS, ETC. SHALL BE CHROME PLATED WHERE EXPOSED.

M. ALL EXPOSED MATERIALS WITHIN RETURN AIR PLENUMS SHALL HAVE A FLAME SPREAD INDEX OF NOT MORE THAN 25 AND A SMOKE-DEVELOPED INDEX OF NOT MORE THAN 50, AS DETERMINED IN ACCORDANCE WITH ASTM E84 AND U.L. LISTINGS. IF ANY MATERIALS DO NOT MEET THESE STANDARDS, THE ITEMS SHALL BE ENCLOSED IN A GYPSUM-BOARD ENCLOSURE, BE PLENUM RATED MATERIALS (I.E. CAST IRON), OR BE WRAPPED WITH AN APPROVED FIRE RATING MATERIAL, SUCH AS 3M FYRE WRAP. PLASTIC PIPING (PVC, ABS, CPVC) IS NOT APPROVED TO BE INSTALLED WITHIN RETURN AIR PLENUMS UNLESS WRAPPED AS NOTED ABOVE. COORDINATE ALL RETURN AIR PLENUM LOCATIONS PRIOR TO BID.

N. DO NOT ROUTE ANY PIPING OVER ELECTRIC ROOMS, COMPUTER ROOMS, OR ELECTRIC PANELS.

O. PROVIDE A LINTEL AT ALL NEW OPENINGS (EXCEEDING 12" WIDE) IN NEW OR EXISTING WALLS.

P. ALL WASTE PIPING BELOW GRADE SHALL BE SOLID WALL SCH 40 PVC PIPE, PVC DWV SOCKET FITTINGS AND SOLVENT-CEMENTED JOINTS.

Q. ALL WASTE AND VENT PIPING ABOVE GRADE SHALL BE HUBLESS CAST IRON SOIL PIPE AND FITTINGS, HEAVY DUTY HUBLESS PIPING COUPLINGS AND COUPLED JOINTS.

R. ALL VENT PIPING SHALL BE 2" UNLESS OTHERWISE NOTED.

S. SLOPE 2-1/2" AND SMALLER BUILDING WASTE LINES AT MINIMUM OF 1/4" FALL PER FT. AND 3" AND LARGER SANITARY SEWER LINES AT MINIMUM 1/8" FALL PER FT. VERIFY INVERTS WITH SITE UTILITY PLANS AND COORDINATE INSTALLATION TO ASSURE PROPER FLOW.

T. PROVIDE CLEAN OUTS IN ALL WASTE, SANITARY, STORM DRAINAGE AND OVERFLOW LINES WHETHER SHOWN OR NOT, AT INTERVALS NOT TO EXCEED 100 FEET, AT EACH CHANGE OF DIRECTION GREATER THAN 45 DEGREES, AND ON ALL VERTICAL RISERS AT HEIGHT OF 30" A.F.F. AT THE BASE OF EACH STACK.

U. FLOOR DRAINS IN MECHANICAL ROOMS ARE SHOWN FOR GENERAL LOCATION ONLY. FLOOR DRAINS SHALL BE ACCESSIBLE AND SHALL BE COORDINATED WITH MECHANICAL EQUIPMENT LAYOUT. ALL FLOOR DRAINS SHALL HAVE A 4" DEEP SEAL TRAP MINIMUM.

V. AN APPROVED TRAP GUARD PRODUCT, CONFORMING TO ASSE STANDARD 1072, SHALL BE INSTALLED AT ALL FLOOR AND HUB DRAINS. INSTALL TRAP GUARD DEVICES PER MANUFACTURER'S INSTRUCTIONS.

W. ALL NEW AND EXISTING STORM DRAIN, CONDENSATE DRAIN, WASTE, SEWER AND VENT PIPING SHALL BE RODDED AND CLEANED AT END OF CONSTRUCTION. ALL TRAPS SHALL BE CLEANED AND PRIMED AT END OF CONSTRUCTION.

X. PROVIDE PRESSURE REDUCING VALVES IN WATER PIPING. THE MAXIMUM PRESSURE SHALL BE 70 PSI AT ALL OUTLETS. THE MINIMUM PRESSURE ACCEPTABLE AT WATER OUTLETS IS 20 PSI AT FLUSH VALVES, AND 8 PSI AT ALL OTHER OUTLETS.

Y. MAINTAIN 10'-0" MINIMUM CLEARANCE BETWEEN FRESH AIR INTAKES, OPERABLE WINDOWS AND FLUES AND PLUMBING VENTS.

Z. EACH FIXTURE GROUP OR BATTERY OF FIXTURES SHALL BE PROVIDED WITH A SHUTOFF VALVE IN THE DOMESTIC HOT AND COLD WATER SUPPLY LINES ABOVE CEILING. VALVES SHALL BE ACCESSIBLE FROM BELOW. ACCESS PANELS SHALL BE COORDINATED WITH ARCHITECT PRIOR TO CONSTRUCTION.

AA. PROVIDE WATER HAMMER ARRESTORS IN FIXTURE BRANCHES WHERE QUICK CLOSING VALVES ARE INSTALLED; i.e., FLUSH VALVES, ICE MAKERS, DISHWASHERS, ETC. PROVIDE WATER HAMMER ARRESTORS IN FIXTURE BRANCHES AS REQUIRED.

AB. PROVIDE BACK FLOW PREVENTION OR AN ANTI-SIPHON DEVICE AT ALL FIXTURES THAT COULD CONTAMINATE THE POTABLE WATER SYSTEM.

AC. INSTALL LISTED NATURAL GAS VALVE IMMEDIATELY AHEAD OF EACH NATURAL GAS PRESSURE REGULATOR, AND AT EACH PIECE OF GAS FIRED EQUIPMENT.

AD. INSULATE ALL ABOVE GRADE SUPPLY PIPING AND ALL ABOVE GRADE STORM DRAIN PIPING.

AE. INSULATE ALL ABOVE GRADE CONDENSATE DRAIN PIPING WITH 1/2" ARMAFLEX INSULATION.

AF. PROVIDE INSULATION AT ALL EXPOSED HOT WATER AND DRAIN PIPING FOR HANDICAPPED FIXTURES PER ANSI A117.1 AND ADA REQUIREMENTS.

AG. ALL DOMESTIC WATER AND SPRINKLER PIPING ROUTED IN AREAS SUBJECT TO FREEZING TEMPERATURES SHALL BE ROUTED ON THE INTERIOR OF THE INSULATION AND WITHIN THE HEATED ENVELOPE OF THE BUILDING. REFER TO THE ARCHITECTURAL DRAWINGS FOR INSULATION PLACEMENT AND DETAILS. UNLESS OTHERWISE INDICATED DO NOT ROUTE WATER PIPING IN EXTERIOR WALLS. WHEN ROUTED IN EXTERIOR WALLS, CAREFULLY POSITION WATER PIPING ON THE HEATED SIDE (INTERIOR SIDE) OF THE WALL INSULATION.

AH. ALL PIPE DROPS FROM CEILING PLENUM TO FLOOR SHALL BE MADE IN FURROUTS AT COLUMNS, IN WEB OF BEAMS AT COLUMNS OR IN WALLS. PIPING SHALL BE CONCEALED UNLESS APPROVED BY ARCHITECT.

PLUMBING SYMBOLS LEGEND

NOTE: ALL SYMBOLS MAY NOT APPEAR ON EVERY PLAN

- BELOW GRADE WASTE PIPING
- ABOVE GRADE WASTE PIPING
- SS — SANITARY SEWER PIPING
- BW — BUILDING WASTE AND DRAIN PIPING
- AW — ACID WASTE PIPING
- GW — GREASE WASTE PIPING
- OW — OIL LADENT WASTE PIPING
- SD — STORM DRAIN PIPING
- RD — ROOF DRAIN PIPING
- OD — OVERFLOW ROOF DRAIN PIPING
- VENT PIPING
- AV — ACID VENT PIPING
- FPM — FIRE SPRINKLER MAIN PIPING
- COLD WATER SUPPLY PIPING
- HOT WATER SUPPLY PIPING
- HOT WATER RETURN PIPING
- DI — DEIONIZED COLD WATER SUPPLY PIPING
- G — NATURAL GAS PIPING
- MPG — MEDIUM PRESSURE NATURAL GAS PIPING
- LPG — PROPANE GAS PIPING
- CA — COMPRESSED AIR PIPING
- A — MEDICAL COMPRESSED AIR PIPING
- O — OXYGEN PIPING
- V — VACUUM PIPING
- N — NITROGEN GAS PIPING
- NO — NITROUS OXIDE GAS PIPING
- PIPING DOWN (TEE DOWN TO ELBOW, ELBOW DOWN TO TEE, ELBOW, TEE)
- PIPING UP (TEE, ELBOW)
- TEE (DOWN, SIDE, UP)
- WATER HAMMER ARRESTOR (WHA)
- DIELECTRIC UNION
- VALVE
- CHECK VALVE
- GAS PLUG VALVE
- GAS PRESSURE REGULATOR
- HOSE BIBB
- BACKFLOW PREVENTER
- REDUCED PRESSURE BACKFLOW PREVENTER
- GM — GAS METER
- WM — WATER METER
- NEW PLUMBING EQUIPMENT
- EXISTING PLUMBING EQUIPMENT
- DEMOLISHED PLUMBING EQUIPMENT
- NEW PLUMBING FIXTURE PROVIDED BY THE CONTRACTOR
- EXISTING PLUMBING FIXTURE
- DEMOLISHED PLUMBING FIXTURE
- CLEANOUT AT THE END OF PIPE
- FINISH FLOOR CLEANOUT
- FINISH GRADE — CLEANOUT TO (FINISH) GRADE (COTG)
- 3"V.T.R. — VENT THROUGH THE ROOF
- CONNECT TO THE EXISTING
- POINT OF DEMOLITION

STATE OF MISSOURI
MICHAEL L. PARSON,
GOVERNOR

STATE OF MISSOURI
LAWRENCE
DWAYNE
CALHOUN
NUMBER
E2001027888
REGISTERED PROFESSIONAL ENGINEER
2022 04 01

GHN ARCHITECTS + ENGINEERS
300 South Jefferson Avenue, Suite 301, Springfield, MO 65806
P: 417.869.0719 | F: 417.869.3044 | W: www.ghnae.com

OFFICE OF ADMINISTRATION
DIVISION OF FACILITIES MANAGEMENT, DESIGN AND CONSTRUCTION

DEPT. OF PUBLIC SAFETY
MISSOURI NATIONAL GUARD

REPLACEMENT OF LATRINE AND SHOWER FACILITIES

MONETT READINESS CENTER
300 CHAPEL DRIVE
MONETT, MISSOURI

PROJECT # T2131-01
SITE # 6279
ASSET # 8136279004

REVISION:
DATE:
REVISION:
DATE:
REVISION:
DATE:
ISSUE DATE: 04/01/2022

CAD DWG FILE: XXX
DRAWN BY: BRP
CHECKED BY: LDC
DESIGNED BY: LDC

SHEET TITLE:

PLUMBING LEGEND & GEN NOTES

SHEET NUMBER:

P-001

10 OF 20 SHEETS
APRIL 01, 2022

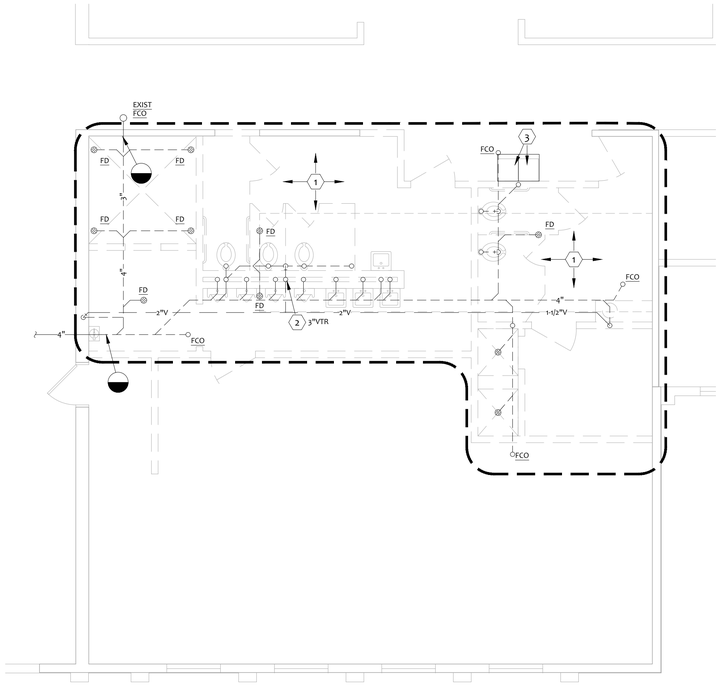

WASTE & VENT PIPING DEMOLITION PLAN

1

0 1' 2' 4' 8'

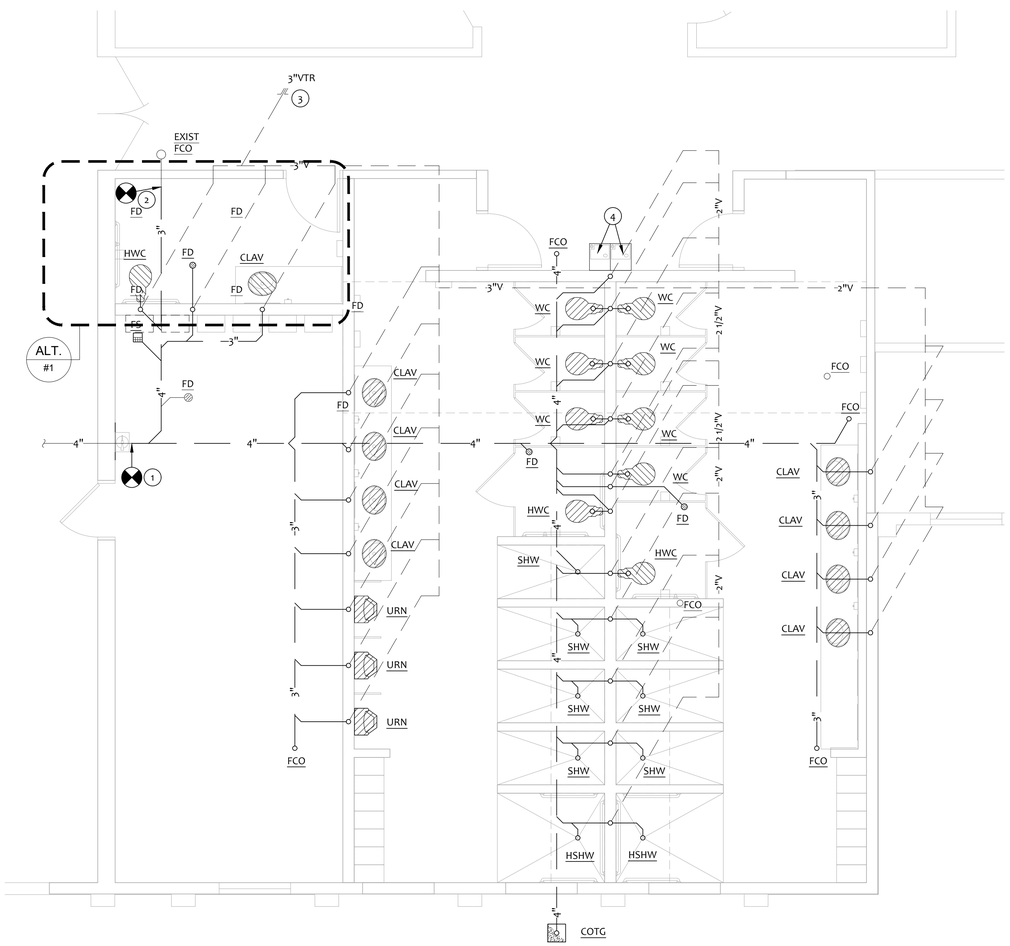

WASTE AND VENT PIPING PLAN

2

0 6" 1' 2' 4' 6'

KEY NOTES

1. CONNECT NEW 4" WASTE TO EXISTING 4" WASTE IN THIS VICINITY. VERIFY EXISTING WASTE LINE SIZE, LOCATION, CONDITION AND INVERT PRIOR TO ROUTING OR CONNECTION OF NEW PIPING.
2. CONNECT NEW 3" WASTE TO EXISTING 3" WASTE IN THIS VICINITY. VERIFY EXISTING WASTE LINE SIZE, LOCATION, CONDITION AND INVERT PRIOR TO ROUTING OR CONNECTION OF NEW WASTE PIPING.
3. NEW 3" VTR. INSTALL MINIMUM OF 10 FEET FROM OUTSIDE AIR INTAKE HOOD IH-1.
4. INSTALL EXISTING WATER COOLERS IN THIS LOCATION. REFER TO ARCHITECTURAL FOR ELEVATIONS.

DEMO KEY NOTES

1. DEMO ALL PLUMBING (FIXTURES, SUPPLY, WASTE AND VENT) WITHIN THIS AREA UNLESS OTHERWISE NOTED. PREPARE REMAINING SUPPLY, WASTE AND VENT PIPING TO ACCOMMODATE NEW PLUMBING - REFER TO P-101 AND P-201.
2. CAP EXISTING 3" VENT THRU ROOF. FILL PIPE WITH INSULATION. COORDINATE WITH ARCHITECTURAL.
3. REMOVE EXISTING ELECTRIC WATER COOLERS. SALVAGE FOR REINSTALL - REFER TO P-101 AND P-201.

STATE OF MISSOURI
MICHAEL L. PARSON,
GOVERNOR

STATE OF MISSOURI
LAWRENCE
DWAYNE
CALHOUN
NUMBER
E2001027888
REGISTERED PROFESSIONAL ENGINEER
2022 04 01

GHN
ARCHITECTS + ENGINEERS
300 South Jefferson Avenue, Suite 301, Springfield, MO 65806
P: 417.869.0719 | F: 417.869.3044 | W: www.ghnae.com

OFFICE OF ADMINISTRATION
DIVISION OF FACILITIES MANAGEMENT, DESIGN AND CONSTRUCTION

DEPT. OF PUBLIC SAFETY
MISSOURI NATIONAL GUARD

REPLACEMENT OF LATRINE AND SHOWER FACILITIES

MONETT READINESS CENTER
300 CHAPEL DRIVE
MONETT, MISSOURI

PROJECT # T2131-01
SITE # 6279
ASSET # 8136279004

REVISION:
DATE:
REVISION:
DATE:
REVISION:
DATE:
ISSUE DATE: 04/01/2022

CAD DWG FILE: XXX
DRAWN BY: BRP
CHECKED BY: LDC
DESIGNED BY: LDC

SHEET TITLE:

WASTE & VENT PIPING PLANS

SHEET NUMBER:

P-101

11 OF 20 SHEETS
APRIL 01, 2022

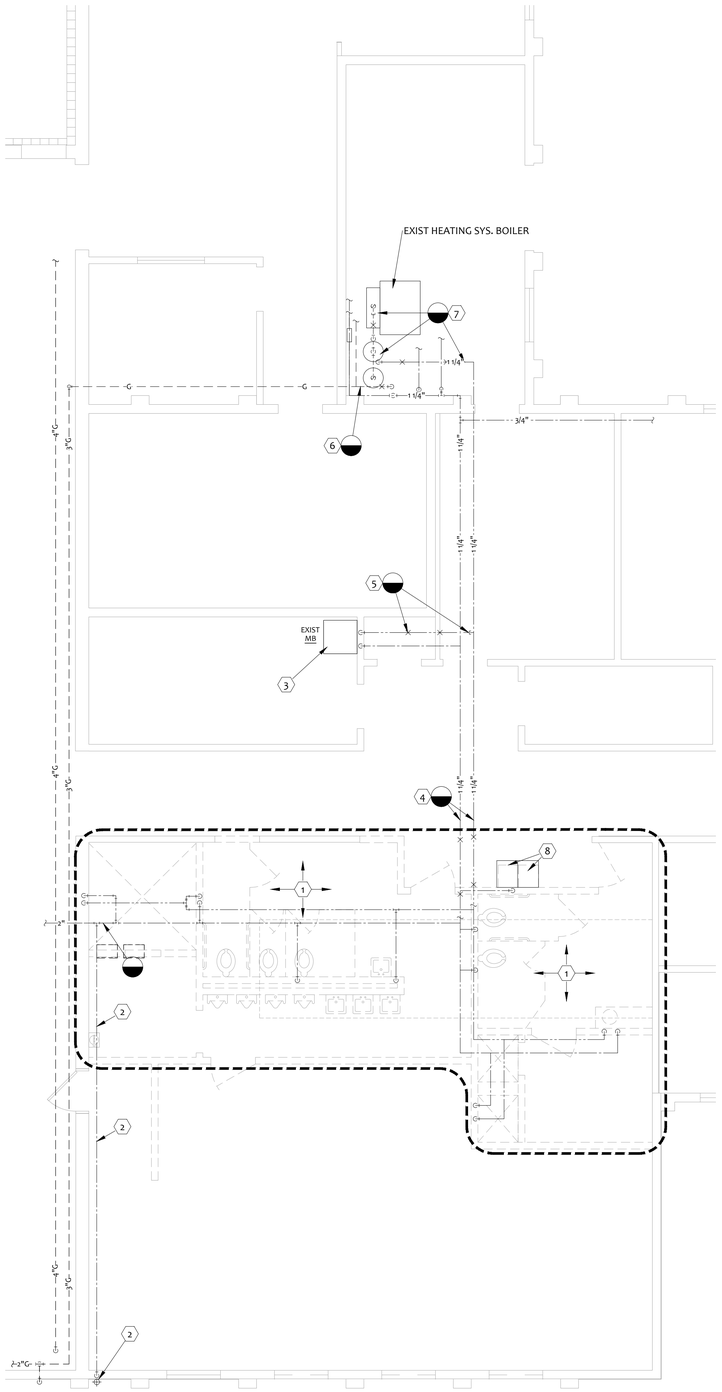

1 SUPPLY PIPING DEMOLITION PLAN

0 1' 2' 4' 8'

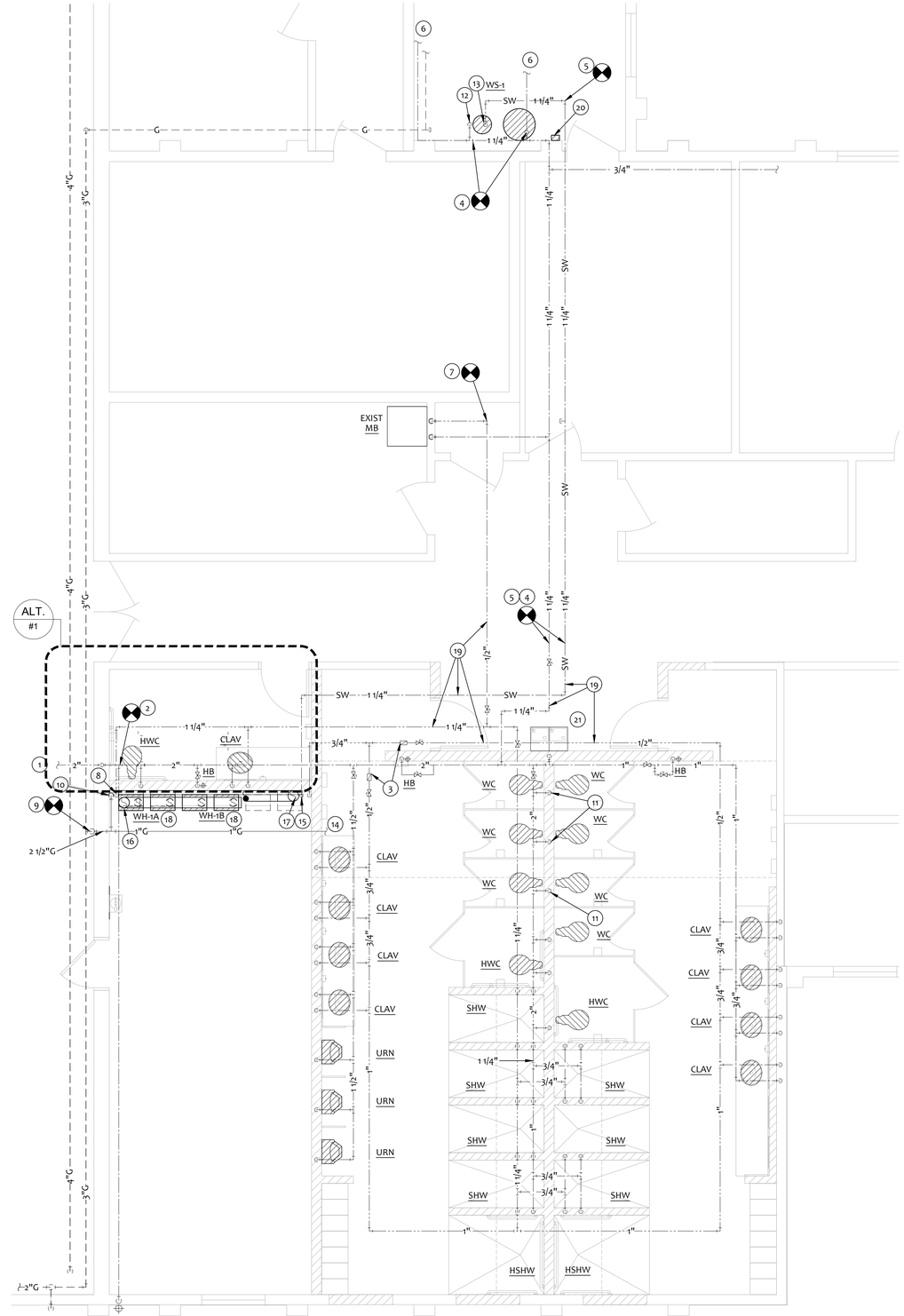

2 SUPPLY PIPING PLAN

0 6" 1' 2' 4' 6'

DEMO KEY NOTES

1. DEMO ALL PLUMBING (FIXTURES, SUPPLY, WASTE AND VENT) WITHIN THIS AREA UNLESS OTHERWISE NOTED. PREPARE REMAINING SUPPLY, WASTE AND VENT PIPING TO ACCOMMODATE NEW PLUMBING - REFER TO P-101 AND P-201.
2. EXISTING WALL HYDRANT AND SUPPLY LINE TO REMAIN. VERIFY EXISTING SUPPLY LINE ROUTING.
3. EXISTING MOP BASIN TO REMAIN.
4. DEMO COLD WATER AND HOT WATER PIPING BACK TO A POINT THAT ACCOMMODATES NEW DOMESTIC WATER PIPING LAYOUT. REFER TO P-201.
5. REMOVE SECTION OF ½" HOT WATER PIPING AS INDICATED. CAP ½" RUNOUT AT 1-1/4" MAIN.
6. REMOVE SECTION OF GAS PIPING SERVING EXISTING WATER HEATERS. CAP GAS PIPING AT MAIN AS INDICATED. VERIFY EXISTING GAS PIPE ROUTING.
7. REMOVE EXISTING WATER HEATERS COMPLETE - INCLUDING GAS PIPING RUNOUT, DOMESTIC COLD WATER & HOT WATER RUNOUTS AND FLUE PIPE. CAP FLUE PIPE AT FLUE MAIN RISER. PREPARE AREA/UTILITIES FOR DOMESTIC WATER SOFTENER INSTALLATION. REFER TO P-201.
8. REMOVE EXISTING ELECTRIC WATER COOLERS. SALVAGE FOR REINSTALL - REFER TO P-101 AND P-201.

KEY NOTES

1. EXISTING 2" COLD WATER FROM WATER SERVICE RISER TO WEST.
2. CONNECT NEW 2" COLD WATER TO EXISTING 2" COLD WATER IN THIS VICINITY. VERIFY EXISTING COLD WATER LINE SIZE, LOCATION AND CONDITION PRIOR TO ROUTING OR CONNECTION OF NEW PIPING.
3. PROVIDE AUTOMATIC FLOW CONTROL VALVE (GRISWOLD ½" K VALVE - NO LEAD), SET AT 1.0 GPM. PROVIDE CHECK VALVE IMMEDIATELY DOWNSTREAM OF FLOW VALVE.
4. CONNECT NEW 1-1/4" COLD WATER TO EXISTING 1-1/4" COLD WATER IN THIS VICINITY. VERIFY EXISTING WATER LINE SIZE, LOCATION AND CONDITION PRIOR TO ROUTING OR CONNECTION OF NEW PIPING.
5. CONNECT NEW 1-1/4" SOFT WATER TO EXISTING 1-1/4" WATER LINE (REPURPOSED HOT WATER) IN THIS VICINITY. VERIFY EXISTING WATER LINE SIZE, LOCATION AND CONDITION PRIOR TO ROUTING OR CONNECTION OF NEW PIPING
6. EXISTING COLD WATER LINE TO REMAIN.
7. CONNECT NEW 1/2" HOT WATER TO EXISTING 1/2" HOT WATER IN THIS VICINITY. VERIFY EXISTING WATER LINE SIZE, LOCATION AND CONDITION PRIOR TO ROUTING OR CONNECTION OF NEW PIPING
8. 1-1/4" HOT WATER DOWN TO WATER HEATER. REFER TO DETAIL.
9. CONNECT NEW 2-1/2" NATURAL GAS LINE TO EXISTING 3" NATURAL GAS LINE IN THIS VICINITY. DROP DOWN TO APPROX. 14 FEET A.F.F. AND ROUTE GAS PIPING JUST BELOW ROOF DECK AT FITNESS 117.
10. 2-1/2" GAS PIPING DOWN TO WH-1A/AB GAS SUPPLY HEADER.
11. 1-1/2" COLD WATER DOWN IN WALL TO SERVE (2) WATER CLOSETS.
12. 1-1/4" COLD WATER DOWN TO WATER SOFTENER.
13. 1-1/4" SOFTENED WATER FROM WATER SOFTENER.
14. EXTEND 1" GAS PIPING TO AHU-1 FURNACE. REFER TO M-101 FOR CONTINUATION.
15. 1-1/4" COLD (SOFTENED) WATER AND ¾" HOT WATER RETURN DOWN TO WATER HEATER. REFER TO DETAIL.
16. 8" POLYPROPYLENE VENT UP THRU ROOF. PROVIDE MANUFACTURER'S ROOF TERMINATION CAP.
17. 8" POLYPROPYLENE COMBUSTION AIR INTAKE UP THRU ROOF. PROVIDE MANUFACTURER'S ROOF TERMINATION CAP.
18. INSTALL WATER HEATERS/MOUNTING FRAMES SIDE BY SIDE FOR OPERATION AS 4-MANIFOLD SYSTEM, AND TO ACCOMMODATE FUTURE SYSTEM EXPANSION.
19. COORDINATE PIPE ROUTING WITH EXISTING SYSTEMS IN THIS AREA. PAINT (BLACK) ALL PIPING/INSULATION INSTALLED IN THIS AREA.
20. WATER HEATER (WH-1A & WH-1B) REMOTE CONTROLLER. VERIFY LOCATION WITH OWNER.
21. INSTALL EXISTING WATER COOLERS IN THIS LOCATION. REFER TO ARCHITECTURAL FOR ELEVATIONS.

STATE OF MISSOURI
MICHAEL L. PARSON,
GOVERNOR

STATE OF MISSOURI
LAWRENCE
DUANE
CALHOUN
NUMBER
E2001027888
REGISTERED PROFESSIONAL ENGINEER
2022 04 01

GHN ARCHITECTS + ENGINEERS
300 South Jefferson Avenue, Suite 301, Springfield, MO 65806
P: 417.869.0719 | F: 417.869.3044 | W: www.ghnae.com

OFFICE OF ADMINISTRATION
DIVISION OF FACILITIES MANAGEMENT, DESIGN AND CONSTRUCTION

DEPT. OF PUBLIC SAFETY
MISSOURI NATIONAL GUARD

REPLACEMENT OF LATRINE AND SHOWER FACILITIES

MONETT READINESS CENTER
300 CHAPEL DRIVE
MONETT, MISSOURI

PROJECT # T2131-01
SITE # 6279
ASSET # 8136279004

REVISION:
DATE:
REVISION:
DATE:
REVISION:
DATE:
ISSUE DATE: 04/01/2022

CAD DWG FILE: XXX
DRAWN BY: BRP
CHECKED BY: LDC
DESIGNED BY: LDC

SHEET TITLE:

SUPPLY PIPING PLANS

SHEET NUMBER:

P-201

12 OF 20 SHEETS
APRIL 01, 2022

PUMP SCHEDULE (BASIS OF DESIGN)

MARK	MANUFACTURER	MODEL	WATER FLOW RATE	TOTAL HEAD	PUMP	MOTOR		ELECTRICAL			ACCESSORIES	REMARKS
			GPM	FT. OF H_2O	RPM	BHP	MHP	V/PH	MCA	MOCP		
P-1	BELL & GOSSETT	NBF-25	2	18	2950	-	125w	120/1	<1	20	TH, TM	1

ACCESSORIES:

TH - ADJUSTABLE THERMOSTAT
TM - ADJUSTABLE TIMER

REMARKS:

1. CONNECTIONS AS REQUIRED BY PIPING TYPE..

PLUMBING FIXTURE SCHEDULE (BASIS OF DESIGN)

MARK	DESCRIPTION	MANUFACTURER	MODEL	ACCESSORIES	FAUCET	WASTE	VENT	CONN. SIZE		REMARKS
								HOT	COLD	
CLAV	20"x17" COUNTERTOP LAVATORY	ZURN	Z5114	GRID	ZURN Z7440-XL-FC	2"	2"	1/2"	1/2"	3
COTG	CLEANOUT TO GRADE	ZURN	Z1474	-	-	4"	-	-	-	-
FCO	FINISH FLOOR CLEANOUT	ZURN	ZN1400-BP		-	-	-	-	-	6
FD	CAST-IRON BODY FLOOR DRAIN	ZURN	ZN-Z415B	TRAP	-	2"	2"	-	-	-
FS	CAST-IRON BODY FLOOR SINK	ZURN	Z1902-2-25	TRAP	-	4"	2"	-	-	-
HB	HOSE BIBB	ZURN	Z1341	BOX	-	-	-	-	1/2"	7
HWC	ADA FLUSH VALVE WATER CLOSET	ZURN	Z5665-BWL1	SEAT	ZURN Z6000AV	4"	2"	-	1"	1,2
HSHW	ACCESSIBLE SHOWER	-	-	BARS, DRAIN SH-SEAT	Z7300-SSC-HW11-MT-VB-WF	2"	2"	1/2"	1/2"	4, 5
SHW	SHOWER	-	-	DRAIN	ZURN Z7301-SS-MT-S5	2"	2"	1/2"	1/2"	4, 5
URN	WALL MOUNTED 0.5 GPF	ZURN	Z5755-U	CARRIER	Z6003AV-EWS	2"	2"	-	3/4"	2
WC	FLUSH VALVE WATER CLOSET	ZURN	Z5655-BWL1	SEAT	ZRUN Z600AV	4"	2"	-	1"	2
WCO	WALL CLEANOUT	ZURN	Z1446	-	-	PIPE SIZE	-	-	-	2
WLAV	WALL MOUNTED LAVATORY	ZURN	Z5344	GRID	ZURN Z7440-XL-FC	2"	2"	1/2"	1/2"	4

ACCESSORIES:

BARS - ADA COMPLIANT GRAB BARS
BOX - ZURN Z341 - BOX FAUCET BOX
CARRIER - FLOOR MOUNTED CARRIER
CARRIER2 - ELKAY MLP200
DRAIN - SHOWER DRAIN - ZURN ZS415BS
GRID - GRID STRAINER/TAILPIECE - ZURN Z8743-PC
SEAT - ZURN Z5956SS-EL (HEAVY DUTY) OPEN FRONT WHITE SEAT
SH-SEAT - REMOVABLE FOLD-UP SEAT
TRAP - TRAP GUARD DEVICE CONFORMING TO ASSE STANDARD 1072

REMARKS:

1. HANDLE ON THE WIDE SIDE OF THE STALL.
2. REFER TO THE ARCHITECTURAL PLANS FOR THE MOUNTING HEIGHT.
3. INSULATE THE SUPPLY AND DRAIN PIPING WITH A WHITE INSULATION DEVICE EQUAL TO McGUIRE MODEL NO. PW-2150-WC AND PROVIDE A THERMOSTATIC MIXING VALVE ON THE SUPPLIES EQUAL TO WATTS MODEL NO. LFUSG-B
4. VALVE ORIENTATION PER THE PLAN.
5. REFER TO THE ARCHITECTURAL PLANS FOR THE SHOWER SURFACE ENCLOSURE INFORMATION.
6. REFER TO THE PLAN FOR THE SIZE.
7. MOUNTED AT 24" ABOVE FINISH FLOOR

WATER SOFTENER SCHEDULE (BASIS OF DESIGN)

MARK	MANUFACTURER	MODEL	EXCHANGE CAPACITY				FLOW RATES		CONN. SIZE	SALT STORAGE	WEIGHT	REMARKS
			GRAINS		SALT USAGE (LBS.)		CONT.	PEAK				
			MAX.	MIN.	MAX.	MIN.	GPM	GPM	INCHES	LBS.	LBS.	
WS-1	CULLIGAN	HE1.25 14in DF	90,000	60,000	45	18	2.0	20.4	1-1/4	650	1800	1,2

REMARKS:

1. PROVIDE AQUA SENSOR RESIN BED CONTROL PROBE
2. VACUUM BREAKER

GAS WATER HEATER SCHEDULE (BASIS OF DESIGN)

MARK	MANUFACTURER	MODEL	GAS INPUT	RECOVERY @ 86° F. RISE	STORAGE CAPACITY	ELECTRICAL			REMARKS
			MBH	GPH	GALLONS	V/PH	MCA	MOCP	
WH-1A	RHEEM	RTR-WM220DVLN	399.8	17.9(4)	Ø	120/1	8	20	1, 2, 3
WH-1B	RHEEM	RTR-WM220DVLN	399.8	17.9(4)	Ø	120/1	8	20	1, 2, 3

REMARKS:

1. 140 DEGREE F. SET POINT TEMPERATURE.
2. PROVIDE CENTROTHERM PPS COMMON VENT (SP20908C) AND INTAKE SYSTEM WITH ROOF TERMINATIONS
3. WATER HEATER TO BE OPERATED AS A MANIFOLD SYSTEM OF 4
4. SYSTEM PEAK DELIVERY

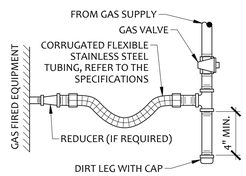

6 GAS CONNECTION DETAIL
NOT TO SCALE

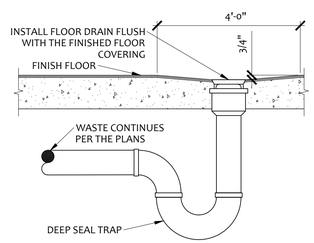

5 FLOOR DRAIN DETAIL
NOT TO SCALE

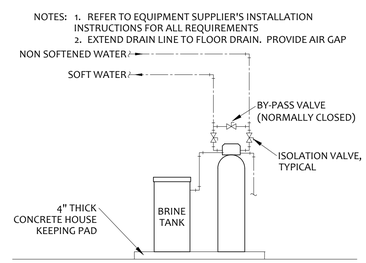

3 WATER SOFTENER CONNECTION DIAGRAM
NOT TO SCALE

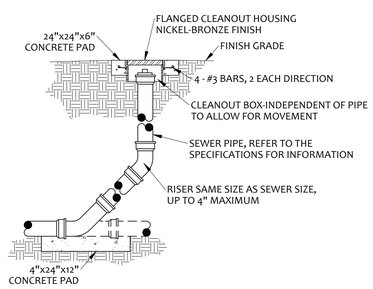

4 CLEANOUT-TO-GRADE DETAIL
NOT TO SCALE

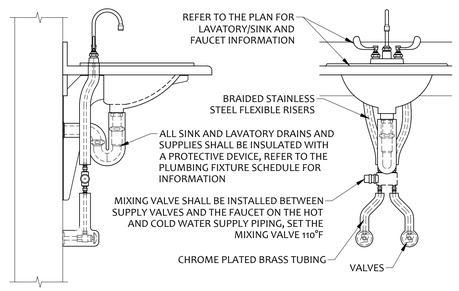

2 LAVATORY INSTALLATION DETAIL
NOT TO SCALE

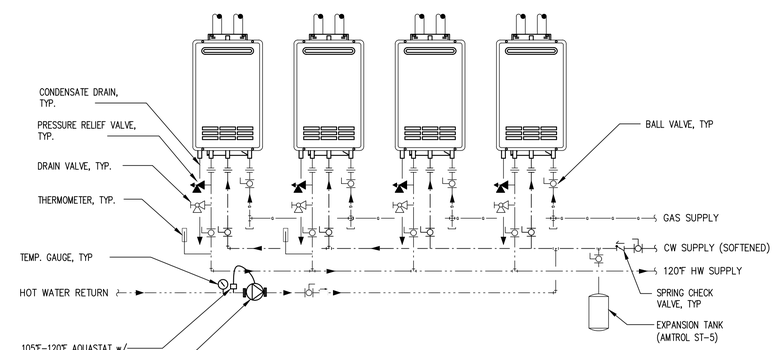

NOTE:
1. WATER HEATER SHALL BE PIPED IN ACCORDANCE WITH MANUFACTURER'S INSTRUCTIONS AND PER ADOPTED CODE.
2. CONDENSATE AND RELIEF DRAIN TO BE ROUTED TO FLOOR DRAIN.
3. PROVIDE MANUFACTURER'S VENT KIT.

1 WATER HEATER
NOT TO SCALE

STATE OF MISSOURI
MICHAEL L. PARSON, GOVERNOR

STATE OF MISSOURI
LAWRENCE DWAYNE CALHOUN
NUMBER E2001027888
REGISTERED PROFESSIONAL ENGINEER
2022 04 01

GHN ARCHITECTS + ENGINEERS
300 South Jefferson Avenue, Suite 301, Springfield, MO 65806
P: 417.869.0719 | F: 417.869.3044 | W: www.ghnae.com

OFFICE OF ADMINISTRATION
DIVISION OF FACILITIES MANAGEMENT, DESIGN AND CONSTRUCTION

DEPT. OF PUBLIC SAFETY
MISSOURI NATIONAL GUARD

REPLACEMENT OF LATRINE AND SHOWER FACILITIES

MONETT READINESS CENTER
300 CHAPEL DRIVE
MONETT, MISSOURI

PROJECT # T2131-01
SITE # 6279
ASSET # 8136279004

REVISION:
DATE:
REVISION:
DATE:
REVISION:
DATE:
ISSUE DATE: 04/01/2022

CAD DWG FILE: XXX
DRAWN BY: BRP
CHECKED BY: LDC
DESIGNED BY: LDC

SHEET TITLE:
PLUMBING SCHEDULES

SHEET NUMBER:
P-301

13 OF 20 SHEETS
APRIL 01, 2022

HVAC EQUIPMENT CONTROL SEQUENCE

AHU-1 (DEDICATED OUTSIDE AIR UNIT W/ ENERGY WHEEL AND NATURAL GAS HEAT):

THE AHU REMOTE TOUCHSCREEN CONTROLLER SHALL MONITOR AND DISPLAY UNIT STATUS AND ALARMS. THE OCCUPIED MODE SHALL BE INITIATED ACCORDING TO THE OWNER DEFINED SCHEDULE. SEQUENCE OF OPERATION SHALL BE ACCOMPLISHED BY MANUFACTURER'S FACTORY INSTALLED CONTROLS.

OCCUPIED:
SUPPLY FAN AND EXHAUST FAN SHALL OPERATE CONTINUOUSLY. THE OUTSIDE AIR DAMPER AND RETURN AIR DAMPER (DAMPERS LOCATED AT GRAVITY VENTILATORS) SHALL OPEN. THE DX COOLING AND GAS HEAT SHALL MODULATE TO MAINTAIN THE OCCUPIED SPACE TEMPERATURE SETPOINT (75°F, ADJ.).

UNOCCUPIED:
SUPPLY AND EXHAUST FANS SHALL CYCLE AND DX COOLING AND GAS HEAT SHALL MODULATE TO MAINTAIN THE UNOCCUPIED SPACE TEMPERATURE SETPOINT (68°F HEATING, 80°F COOLING). A SPACE OVERRIDE TIMER (2 HOURS) LOCATED AT THE SPACE TEMPERATURE SENSOR SHALL START/STOP THE SYSTEM ACCORDING TO THE NORMAL OCCUPIED MODE.

DEHUMIDIFICATION:
FACTORY INSTALLED MODULATING HOT GAS REHEAT SHALL PROVIDE DEHUMIDIFICATION VIA MANUFACTURER'S CONTROL SEQUENCE TO MAINTAIN SPACE RELATIVE HUMIDITY BELOW 60% (ADJ.). DEHUMIDIFICATION SEQUENCE SHALL BE ALLOWED WHEN OUTSIDE AIR TEMPERATURE IS ABOVE 40°F.

ENERGY WHEEL OPERATION:
THE ENERGY RECOVERY VENTILATOR (ERV) IS INTERLOCKED WITH SUPPLY FAN AND EXHAUST FAN OPERATION IN OCCUPIED HEATING OR COOLING MODES. FROST CONTROL - DUCT HEATER DH-1 SHALL MODULATE AS REQUIRED TO MAINTAIN UNIT ENTERING AIR TEMPERATURE AT 18°F. REFER TO MANUFACTURER'S LITERATURE FOR COMPLETE ERV SEQUENCE.

*THE SYSTEM SHALL SHUT DOWN:
UPON DETECTION OF SMOKE BY SMOKE DETECTORS LOCATED IN THE RETURN AIR STREAM OR FIRE ALARM SYSTEM
HIGH WATER LEVEL IN UNIT CONDENSATE DRAIN PAN AS SENSED BY HIGH CONDENSATE LEVEL SWITCH

MECHANICAL GENERAL NOTES

A. COMPLY WITH LOCAL, STATE AND NATIONAL CODES.

B. COORDINATE WORK WITH THE WORK OF ALL TRADES ON THE PROJECT.

C. FIELD VERIFY THE EXISTING CONDITIONS PRIOR TO BIDDING.

D. ALL DRAWINGS ARE DIAGRAMMATIC AND INDICATE THE GENERAL ARRANGEMENTS OR GEOMETRIC RELATIONSHIPS OF EQUIPMENT AND SERVICES. THEY ARE NOT INTENDED TO SPECIFY OR SHOW EVERY OFFSET, FITTING OR COMPONENT. DO NOT SCALE THE DRAWINGS. INFORMATION AND COMPONENTS SHOWN ON RISER DIAGRAMS OR DETAILS, BUT NOT SHOWN ON PLANS, AND VICE-VERSA, SHALL BE PROVIDED AS IF EXPRESSLY REQUIRED BY BOTH. SUBMIT A REQUEST FOR INFORMATION (RFI) IF INFORMATION CONFLICTS. DRAWINGS SPECIFIC TO THIS DISCIPLINE DO NOT LIMIT THE RESPONSIBILITY OF WORK REQUIRED BY CONTRACT DOCUMENTS. REFER TO ARCHITECTURAL, STRUCTURAL, ELECTRICAL AND OTHER DRAWINGS FOR ADDITIONAL INFORMATION.

E. THE DRAWINGS REFLECT A SYSTEM DESIGNED AROUND SPECIFIC REFERENCE PRODUCTS, THE SELECTION OF WHICH HAS IMPACTED THE DESIGNS OF OTHER TRADES (HVAC, ELECTRICAL, STRUCTURAL, ETC.). IF ALTERNATE MANUFACTURERS, FUEL SOURCES, SIZES, OR MODEL NUMBERS ARE SUBMITTED OR BID, IT IS THE RESPONSIBILITY OF THE CONTRACTOR(S) TO COORDINATE ALL DIFFERENCES PRIOR TO BID. NO EXTRAS WILL BE ALLOWED FOR CHANGES REQUIRED TO OTHER TRADES IF ALTERNATE EQUIPMENT IS BID OR INSTALLED AT THE CONTRACTORS OPTION. NO SUBSTITUTIONS OTHER THAN THE MANUFACTURERS LISTED OR PRE-APPROVED BY ADDENDUM.

F. EXCEPT WHERE MODIFIED BY SPECIFIC NOTATION TO THE CONTRARY, IT SHALL BE UNDERSTOOD THAT THE INDICATION AND/OR DESCRIPTION OF ANY ITEM, IN THE DRAWINGS OR SPECIFICATIONS OR BOTH, CARRIES WITH IT THE INSTRUCTION TO FURNISH AND INSTALL THE ITEM, REGARDLESS OF WHETHER OR NOT THIS INSTRUCTION IS EXPLICITLY STATED AS PART OF THE INDICATION OR DESCRIPTION.

G. PROVIDE REQUIRED MODIFICATIONS TO THE NEW AND EXISTING SYSTEMS TO FACILITATE THE INSTALLATION OF THE NEW SYSTEMS AND FOR THE PROPER OPERATION OF ALL SYSTEMS.

H. ALL DUCT DIMENSIONS REPRESENT INTERIOR FREE DIMENSIONS, ADJUST DUCT CONSTRUCTION FOR THE INSULATION SPECIFIED.

I. LOW PRESSURE FLEXIBLE DUCT SHALL HAVE A MAXIMUM LENGTH OF 5'-0", BE PROPERLY SUPPORTED WITH NO KINKS OR HARD BENDS. ELBOWS SHALL HAVE AN R/D NOT LESS THAN 1.0.

J. LOW PRESSURE DUCT FITTINGS: BRANCH SUPPLY DUCT TO CEILING SUPPLY DIFFUSERS TO BE HIGH EFFICIENCY TAP WITH A DAMPER. ALL 90 DEGREE ROUND ELBOWS SHALL HAVE A R/D = 1.5. ALL 90 DEGREE RECTANGULAR ELBOWS SHALL HAVE TURNING VANES UNLESS OTHERWISE NOTED.

K. CLOSELY COORDINATE THE LOCATION OF INSTALLED EQUIPMENT TO ACHIEVE THE GREATEST ACCESSIBILITY FOR MAINTENANCE PURPOSES.

X. ALL DUCTS PASSING THROUGH A FIRE RATED MEMBRANE SHALL BE INSTALLED WITH FIRE DAMPER, OR PROTECTED AS REQUIRED BY THE GOVERNING CODE.

Y. REFER TO ARCHITECTURAL PLANS FOR CEILING GRILLE LOCATIONS AND CEILING TYPE.

Z. SEAL ALL DUCT JOINTS WITH LIQUID SEALER. DUCT TAPE IS NOT ACCEPTABLE.

AA. PROVIDE DUCT ACCESS DOORS AT EACH FIRE DAMPER, CONTROL DAMPER AND UPSTREAM AND DOWNSTREAM OF EACH DUCT MOUNTED COIL. THE SIZE OF THE DOORS SHALL BE ADEQUATE FOR INSPECTION AND MAINTENANCE OF DUCT MOUNTED EQUIPMENT.

AB. PROVIDE A LINTEL AT ALL NEW OPENINGS (EXCEEDING 12" WIDE) IN NEW OR EXISTING WALLS.

AC. INSULATE AND SECURE THE TOP OF ALL SUPPLY AIR DIFFUSERS WITH 1" THICK FIBERGLASS DUCT WRAP.

AD. COORDINATE LOCATION OF DUCTS AND DIFFUSERS WITH STRUCTURAL FRAMING MEMBERS. OFFSET DUCTS, AS REQUIRED, TO CLEAR STRUCTURAL MEMBERS.

AE. PROVIDE A SLEEVE, FOR ALL PIPE AND DUCTS, THROUGH FIRE RATED PARTITIONS AND SLABS AND SEAL WITH FIRE RATED SEALANT.

AF. PATCH ALL WALLS, FLOORS, AND CEILINGS TO MATCH THE SURROUNDING SURFACE FOR ALL OPENINGS CREATED BY DEMOLITION WORK. REPLACE AND/OR PATCH TO MATCH THE EXISTING SURFACE ANY PIPE AND/OR DUCT INSULATION THAT SHALL REMAIN AND IS DAMAGED OR REMOVED DURING CONSTRUCTION.

AG. ACCESS PANELS IN HARD CEILINGS SHALL BE A MINIMUM OF 24" X 24" FOR BALANCING DAMPERS, HUMIDIFIERS, VALVES, TRAPS, CLEAN OUTS, CONTROLS, FIRE DAMPERS, ETC.

AH. REFER TO THE ARCHITECTURAL PLANS FOR THE LOCATION OF FIRE AND SMOKE PARTITIONS.

AI. REFER TO THE ARCHITECTURAL PLANS FOR WALL AND ROOF PENETRATIONS AND EQUIPMENT MOUNTING DETAILS.

AJ. USE EXISTING PIPING SYSTEM VALVES WHERE POSSIBLE TO ISOLATE SYSTEMS AND TO CAP EXISTING PIPING. REPLACE EXISTING VALVES WHERE NECESSARY WHEN EXISTING VALVES DO NOT OPERATE PROPERLY.

AK. COORDINATE AND SCHEDULE ALL CONNECTIONS TO EXISTING SYSTEMS AND SYSTEM SHUT-DOWNS WITH OWNER.

AL. MAINTAIN EXISTING BUILDING SYSTEMS WITH PHASED DEMOLITION AND INSTALLATION OF NEW WORK, PROVIDING TEMPORARY SERVICES AS REQUIRED.

AM. EXISTING EQUIPMENT BEING REMOVED AND DESIGNATED TO REMAIN THE PROPERTY OF THE OWNER SHALL BE DELIVERED UPON REMOVAL TO THE LOCATION DESIGNATED BY THE OWNER. THE CONTRACTOR SHALL BE RESPONSIBLE FOR THE DISPOSAL OF ALL OTHER SYSTEM COMPONENTS REMOVED FROM THE SITE.

AN. MAINTAIN A MINIMUM CLEARANCE OF 10'-0" BETWEEN OUTSIDE AIR INTAKES AND ALL EXHAUST FANS, PLUMBING VENTS, FLUES AND OTHER SOURCES OF ODOR.

AI. EXISTING HVAC SYSTEMS AND LAYOUT INDICATED ON DRAWINGS IS BASED ON ORIGINAL CONSTRUCTION DOCUMENTS AND SITE EVALUATION WHERE POSSIBLE. CONTRACTOR SHALL FIELD VERIFY EXISTING SITE CONDITIONS, INCLUDING:
- EQUIPMENT SIZE AND LOCATION
- DUCTWORK SIZE AND ROUTING
- PIPING SIZE AND ROUTING
- MECHANICAL CONTROLS

AJ. REMOVE ALL PORTIONS OF DUCTWORK AND PIPING SYSTEMS INDICATED FOR DEMOLITION. TERMINATE EXISTING SYSTEMS ABOVE CEILING AND BELOW FLOOR SLABS SUCH THAT IT DOES NOT CONFLICT WITH NEW WORK.

AK. REMOVE AND RELOCATE SMALL CONDUIT, CABLE, PIPE, DUCTWORK, HANGERS, ETC. AS NECESSARY TO ACHIEVE A COMPLETE INSTALLED MECHANICAL SYSTEM AS SHOWN ON DRAWINGS.

AL. CLOSELY COORDINATE NEW WORK WITH EXISTING SYSTEMS. PROVIDE NECESSARY MODIFICATIONS TO FACILITATE INSTALLATION/INTERFACE OF NEW SYSTEMS WITH EXISTING.

MECHANICAL SYMBOLS LEGEND

NOTE: ALL SYMBOLS MAY NOT APPEAR ON EVERY PLAN.

- SUPPLY AIR CEILING GRILLE
- RETURN AIR CEILING GRILLE
- EXHAUST AIR CEILING GRILLE
- NEW EQUIPMENT
- EXISTING EQUIPMENT
- DEMOLISHED EQUIPMENT
- NEW DUCTWORK
- EXISTING DUCTWORK
- DEMOLISHED DUCTWORK
- MEDIUM PRESSURE DUCT
- 12X10 — DUCT-WIDTHxDEPTH
- 12X10Ø — FLAT OVAL DUCT-WIDTHxDEPTH
- SUPPLY DUCT DOWN
- SUPPLY DUCT UP
- RETURN/EXHAUST DUCT DOWN
- RETURN/EXHAUST DUCT UP
- ROUND DUCT DOWN
- ROUND DUCT UP
- ROUND DUCT DOWN TO A BELLMOUTH FITTING WITH A DAMPER
- UP/DN — SLOPING IN DIRECTION OF AIR FLOW
- FLEXIBLE DUCT (MAX. 5'-0" LONG)
- SIDEWALL SUPPLY/RETURN GRILLES
- LOUVER
- MANUAL OPPOSED BLADE DAMPER
- M M OR — MOTORIZED OPPOSED BLADE DAMPER
- FLEX CONNECTION IN DUCT
- MANUAL BUTTERFLY DAMPER W/ LOCKING QUADRANT
- RADIUS ELBOW R/D = 1.5
- ELBOW W/ TURNING VANES
- SQUARE TO SQUARE TRANSITION
- SQUARE TO ROUND TRANSITION
- ROUND DUCT / RECTANGULAR DUCT
- SPLITTER DAMPER
- AIR EXTRACTOR
- DAMPER (IF SHOWN) CONICAL/BELLMOUTH TEE
- DAMPER (IF SHOWN) HIGH EFFICIENCY TAKE-OFF
- 45° DEG.° LATERAL
- DAMPER (IF SHOWN) 45 DEG.° ENTRY TAP
- CONICAL 45° DEG. LATERAL
- FIRE DAMPER
- SMOKE DAMPER
- FIRE SMOKE DAMPER
- A.D. / A.D. — DUCT ACCESS DOOR, VERTICAL OR HORIZONTAL ON THE BOTTOM OF THE DUCT
- WALL ACCESS PANEL
- A.P. — CEILING ACCESS PANEL
- HWS — HOT WATER SUPPLY PIPING
- HWR — HOT WATER RETURN PIPING
- CD — CONDENSATE DRAIN
- R — REFRIGERANT LINE SET
- H — HUMIDISTAT
- T — THERMOSTAT
- T — THERMOSTAT WITH LOCKING COVER
- T_A — ADJUSTABLE ROOM SENSOR
- T_S — NON-ADJUSTABLE ROOM SENSOR
- C — CO2 SENSOR

STATE OF MISSOURI
MICHAEL L. PARSON,
GOVERNOR

STATE OF MISSOURI
LAWRENCE DWAYNE CALHOUN
NUMBER E2001027888
REGISTERED PROFESSIONAL ENGINEER
2022 04 01

GHN ARCHITECTS + ENGINEERS
300 South Jefferson Avenue, Suite 301, Springfield, MO 65806
P: 417.869.0719 | F: 417.869.3044 | W: www.ghnae.com

OFFICE OF ADMINISTRATION
DIVISION OF FACILITIES MANAGEMENT, DESIGN AND CONSTRUCTION

DEPT. OF PUBLIC SAFETY
MISSOURI NATIONAL GUARD

REPLACEMENT OF LATRINE AND SHOWER FACILITIES

MONETT READINESS CENTER
300 CHAPEL DRIVE
MONETT, MISSOURI

PROJECT # T2131-01
SITE # 6279
ASSET # 8136279004

REVISION:
DATE:
REVISION:
DATE:
REVISION:
DATE:
ISSUE DATE: 04/01/2022

CAD DWG FILE: XXX
DRAWN BY: BRP
CHECKED BY: LDC
DESIGNED BY: LDC

SHEET TITLE:
HVAC GEN NOTES & LEGEND

SHEET NUMBER:
M-001

14 OF 20 SHEETS
APRIL 01, 2022

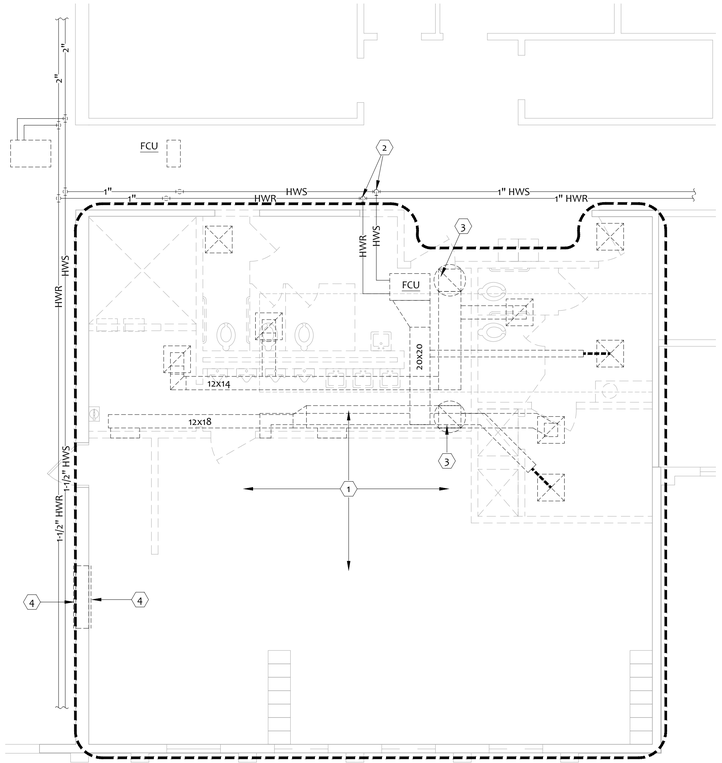

1 HVAC DEMO PLAN

0 1' 2' 4' 8'

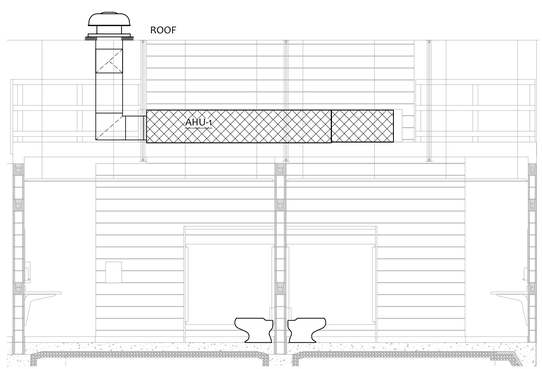

3 MECHANICAL SECTION

0 6" 1' 2' 4' 6'

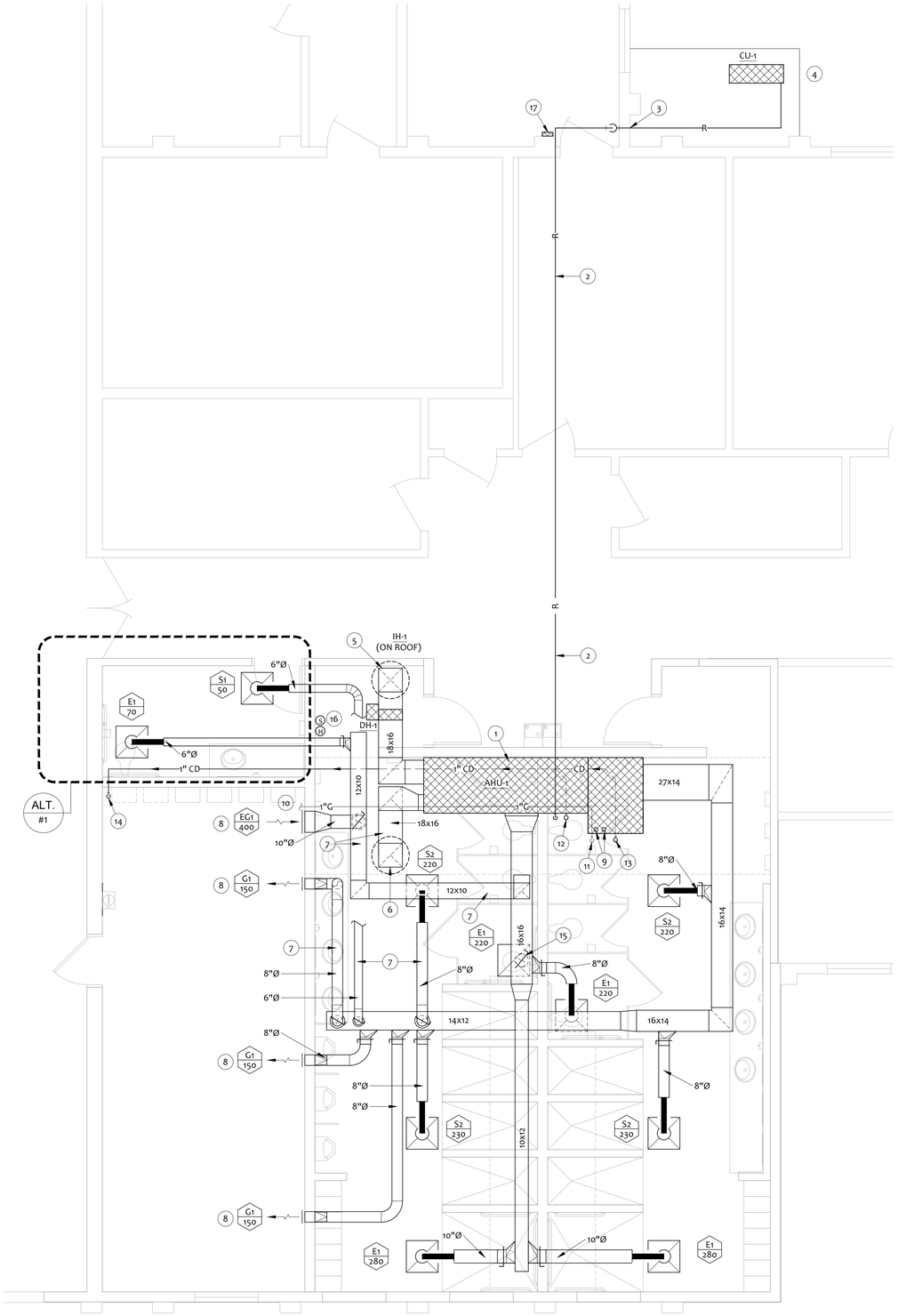

2 MECHANICAL PLAN

0 6" 1' 2' 4' 6'

DEMO KEY NOTES

1. DEMO HVAC SYSTEM COMPLETE IN DESIGNATED AREA (UNLESS NOTED OTHERWISE) - INCLUDING FAN COIL UNIT/ ELECTRICAL CIRCUIT, DUCTWORK, AIR DEVICES, EXHAUST FANS/CIRCUITS.
2. CAP ½" HWS/HWR LINES AT MAIN.
3. REMOVE EXISTING ROOF CURB MOUNTED EXHAUST FAN. CAP EXISTING ROOF CURB. PROVIDE MINIMUM 12" THICK FIBERGLASS INSULATION INSIDE DUCT AND CAP JUST BELOW ROOF DECK.
4. PROVIDE SHEET METAL BLANK-OFF ON BACK OF EXISTING GRILL. FILL WALL VOID BETWEEN GRILLES WITH FIBERGLASS INSULATION. PAINT VISIBLE PORTIONS OF SHEET METAL BLANK-OFF FLAT BLACK.

KEY NOTES

1. SUPPORT AHU-1 ON MINIMUM 12" HIGH FRAME (REFER TO DETAIL). COORDINATE AHU-1 LOCATION WITH EXISTING ROOF TRUSSES TO PROVIDE MANUFACTURERS REQUIRED CLEARANCES. ROUTE CONDENSATE DRAIN TO FLOOR SINK IN FITNESS ROOM 117.
2. SIZE AND INSTALL REFRIGERANT LINE SET IN ACCORDANCE WITH MANUFACTURERS INSTRUCTIONS. PAINT ALL EXPOSED PIPING INSULATION BLACK.
3. SLEEVE AND SEAL WALL PENETRATION. REFER TO DETAIL.
4. INSTALL CONDENSING UNIT ON 10'x6'x4" THICK CONCRETE PAD.
5. 18"x18" OUTSIDE AIR DUCT UP TO GRAVITY INTAKE HOOD (IH-1) ON ROOF.
6. 18"x18" EXHAUST AIR DUCT UP TO RELIEF HOOD (RH-1) ON ROOF.
7. ROUTE DUCTWORK HIGH (NEAR ROOF DECK) TO ALLOW ACCESS TO AHU-1.
8. INSTALL GRILLE AT APPROXIMATELY 10 FEET ABOVE FINISHED FLOOR. REFER TO ARCHITECT FOR EXACT LOCATION.
9. PROVIDE SCH. 40 PVC - 3" COMBUSTION AIR VENT AND 3" FLUE VENT UP THROUGH ROOF. TERMINATE WITH GOOSENECK & TERMINATION SCREEN PER MANUFACTURER'S INSTALLATION INSTRUCTIONS.
10. 1" GAS LINE. REFER TO P-201 FOR CONTINUATION.
11. 1" GAS DOWN TO AHU-1 FURNACE. CONNECT GAS PER MANUFACTURER'S INSTALLATION INSTRUCTIONS.
12. 1" CONDENSATE DRAIN FROM COOLING COIL DRAIN PAN.
13. 1" CONDENSATE DRAIN FROM FURNACE.
14. 1" CONDENSATE DRAIN DOWN TIGHT TO WALL (PAINT TO MATCH WALL). EXTEND TO FLOOR SINK AND TERMINATE WITH AIR GAP.
15. 8" ROUND TAP/DAMPER ON BOTTOM OF DUCT, DOWN TO EXHAUST AIR DEVICE.
16. VERIFY ROOM TEMPERATURE SENSOR AND HUMIDITY SENSOR LOCATIONS WITH OWNER.
17. AHU-1 REMOTE TOUCHSCREEN CONTROLLER. VERIFY LOCATION WITH OWNER.

STATE OF MISSOURI
MICHAEL L. PARSON,
GOVERNOR

STATE OF MISSOURI
LAWRENCE
DWAYNE
CALHOUN
NUMBER
E2001027888
REGISTERED PROFESSIONAL ENGINEER
2022 04 01

GHN ARCHITECTS + ENGINEERS
300 South Jefferson Avenue, Suite 301, Springfield, MO 65806
P: 417.869.0719 | F: 417.869.3044 | W: www.ghnae.com

OFFICE OF ADMINISTRATION
DIVISION OF FACILITIES MANAGEMENT, DESIGN AND CONSTRUCTION

DEPT. OF PUBLIC SAFETY
MISSOURI NATIONAL GUARD

REPLACEMENT OF LATRINE AND SHOWER FACILITIES

MONETT READINESS CENTER
300 CHAPEL DRIVE
MONETT, MISSOURI

PROJECT # T2131-01
SITE # 6279
ASSET # 8136279004

REVISION:
DATE:
REVISION:
DATE:
REVISION:
DATE:
ISSUE DATE: 04/01/2022

CAD DWG FILE: XXX
DRAWN BY: BRP
CHECKED BY: LDC
DESIGNED BY: LDC

SHEET TITLE:
HVAC PLANS

SHEET NUMBER:
M-101

15 OF 20 SHEETS
APRIL 01, 2022

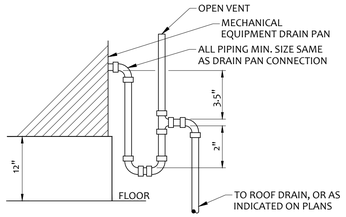

14 CONDENSATE DRAIN TRAP
NOT TO SCALE

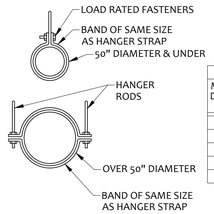

HANGER STRAPS OR RODS			
MAX. DUCT DIA.	HANGER	MAX. LOAD LBS.	MAX. SPACING FT.
26"	ONE 1"x22 GA. STRAP	260	12
36"	ONE 1"x18 GA. STRAP	420	12
50"	ONE 1"x16 GA. STRAP	700	12
60"	TWO 3/8" DIA. RODS	1320	12
84"	TWO 1/2" DIA. RODS	2500	12

NOTES:
TABULATED DATA FROM SMACNA ALLOWS FOR DUCT REINFORCING AND INSULATION BUT NO EXTERNAL LOAD.

13 ROUND DUCT HANGER DETAIL
NOT TO SCALE

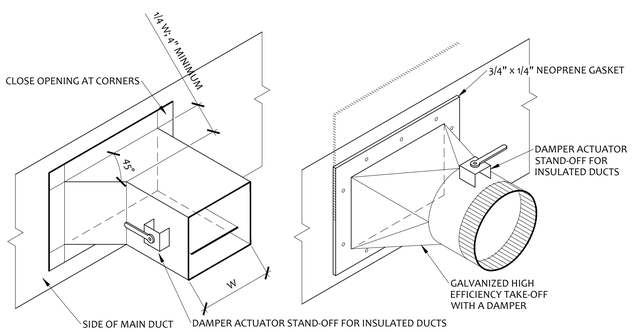

NOTE: REFER TO THE PLANS FOR BRANCH DUCT SIZES.

12 BRANCH DUCT DETAIL
NOT TO SCALE

NOTE: REFER TO MANUFACTURER'S INSTALLATION MANUAL FOR ADDITIONAL REQUIREMENTS

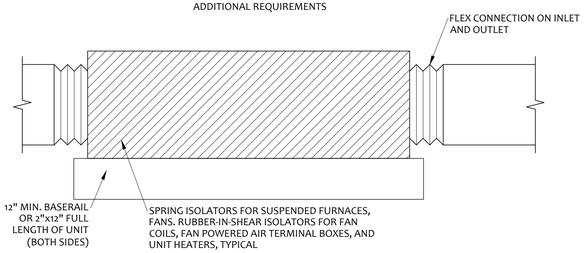

11 AHU-1 SUPPORT
NOT TO SCALE

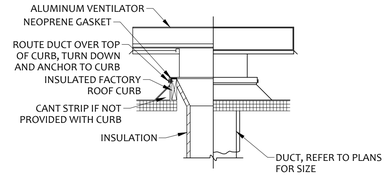

10 ROOFTOP VENTILATOR
NOT TO SCALE

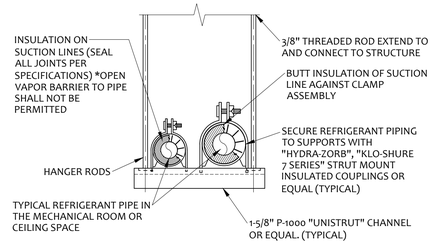

9 SUSPENDED REFRIGERANT PIPE SUPPORT AT CEILING
NOT TO SCALE

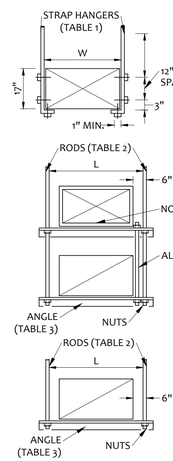

TABLE 1: STRAP HANGERS (PAIR) SPACED			
W+D MAX.	10'-0" MAX.	8'-0" MAX.	5'-0" OR LESS
72"	1"x18 GA.	1"x20 GA.	1"x22 GA.
96"		1"x18 GA.	1"x20 GA.
120"		1"x16 GA.	1"x18 GA.
168"			1"x16 GA.
192"			1"x16 GA.
193"+	SPECIAL ANALYSIS REQUIRED		

TABLE 2: ALLOWABLE HANGER LOAD MAX.			
STRAPS	LBS.	RODS	LBS.
2 - 1"x22 GA.	520	2 - 1/4" DIA.	540
2 - 1"x20 GA.	640	2 - 3/8" DIA.	1360
2 - 1"x18 GA.	840	2 - 1/2" DIA.	2500
2 - 1"x16 GA.	1400	2 - 5/8" DIA.	4000
		2 - 3/4" DIA.	6000

TABLE 3: TRAPEZE ANGLE LOAD MAX.		
L	2"x2"x1/4"	2-1/2"x2-1/2"x1/4"
36"	1200 LBS.	1940 LBS.
48"	1160 LBS.	1900 LBS.
60"	1060 LBS.	1800 LBS.
72"	900 LBS.	1640 LBS.
84"	660 LBS.	1400 LBS.
96"	320 LBS.	1060 LBS.

NOTES:
1. TABULATED DATA FROM SMACNA ALLOWS FOR DUCT REINFORCING AND INSULATION, BUT NO EXTERNAL LOAD.
2. PROVIDE HIGH DENSITY INSERT AT TRAPEZE FOR INSULATED DUCTS.

8 RECTANGULAR DUCT HANGER DETAIL
NOT TO SCALE

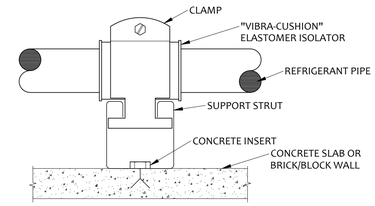

7 REFRIGERANT PIPE SUPPORT
NOT TO SCALE

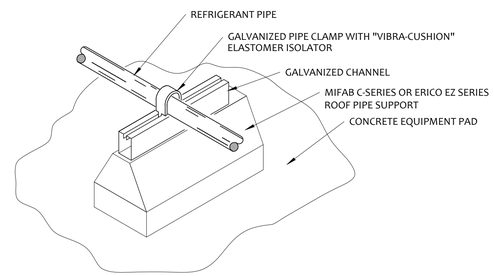

6 PIPE SUPPORT DETAIL
NOT TO SCALE

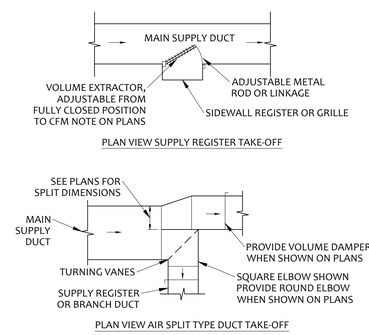

5 SUPPLY DUCT TAKE-OFFS
NOT TO SCALE

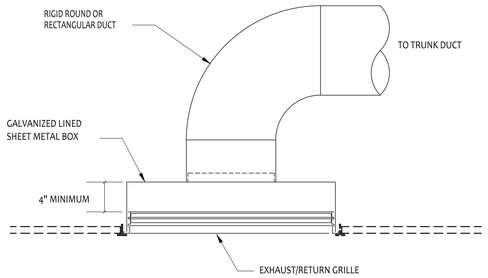

3 EXHAUST GRILLE DUCT CONNECTION
NOT TO SCALE

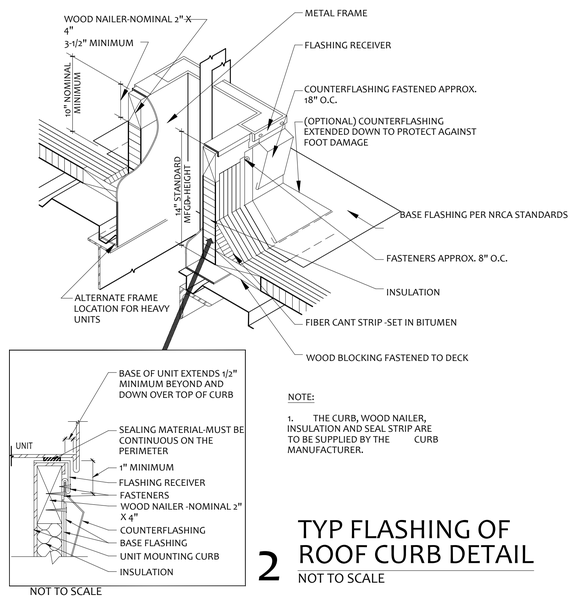

NOTE:
1. THE CURB, WOOD NAILER, INSULATION AND SEAL STRIP ARE TO BE SUPPLIED BY THE CURB MANUFACTURER.

NOT TO SCALE

2 TYP FLASHING OF ROOF CURB DETAIL
NOT TO SCALE

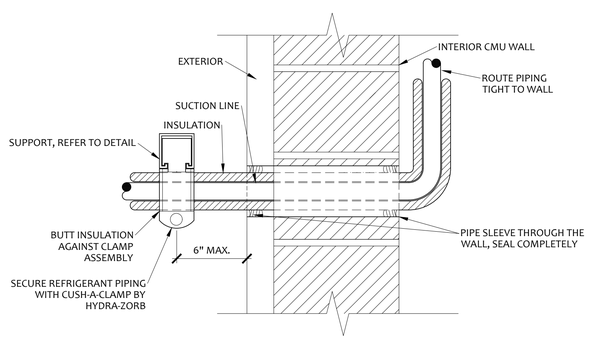

4 REFRIGERANT PIPE SUPPORT/WALL PENETRATION DETAIL
NOT TO SCALE

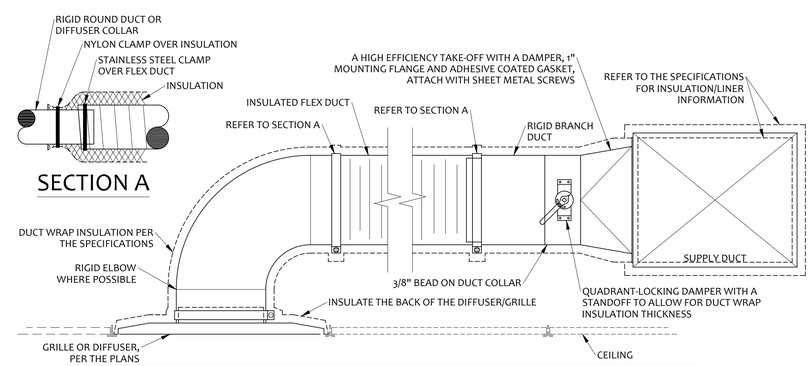

NOTES:
1. FLEX DUCT SHALL BE ROUTED AS STRAIGHT AS POSSIBLE AND CUT TO THE MINIMUM LENGTH. SWEEPING BENDS TO ACCOMMODATE EXCESS LENGTH IS NOT ALLOWED.
2. HANGING STRAPS OMITTED FROM DETAIL FOR CLARITY ONLY. PROVIDE HANGERS AS REQUIRED BY SPECIFICATIONS.

1 BRANCH DUCT DETAIL
NOT TO SCALE

STATE OF MISSOURI
MICHAEL L. PARSON, GOVERNOR

STATE OF MISSOURI
LAWRENCE A. CALHOUN
NUMBER E2001027888
REGISTERED PROFESSIONAL ENGINEER
2022 04 01

GHN ARCHITECTS + ENGINEERS
300 South Jefferson Avenue, Suite 301, Springfield, MO 65806
P: 417.869.0719 | F: 417.869.3044 | W: www.ghnae.com

OFFICE OF ADMINISTRATION
DIVISION OF FACILITIES MANAGEMENT, DESIGN AND CONSTRUCTION

DEPT. OF PUBLIC SAFETY
MISSOURI NATIONAL GUARD

REPLACEMENT OF LATRINE AND SHOWER FACILITIES

MONETT READINESS CENTER
300 CHAPEL DRIVE
MONETT, MISSOURI

PROJECT # T2131-01
SITE # 6279
ASSET # 8136279004

REVISION:
DATE:
REVISION:
DATE:
REVISION:
DATE:
ISSUE DATE: 04/01/2022

CAD DWG FILE: XXX
DRAWN BY: BRP
CHECKED BY: LDC
DESIGNED BY: LDC

SHEET TITLE:
HVAC DETAILS

SHEET NUMBER:
M-201

16 OF 20 SHEETS
APRIL 01, 2022

ELECTRIC DUCT HEATER SCHEDULE (BASIS OF DESIGN)

MARK	SERVES	MANUFACTURER	MODEL	DUCT DIM. (WxH)	CAPACITY KW	ELECTRICAL V/PH	MCA	MOCP	ACCESSORIES	REMARKS
DH-1	AHU-1	NEPTRONIC	DFTIOOH	18x16	8	208/3	28	40	AC,BLE,CA,D,DS,FC, HECM,MC,N1,PDN, SCR,SSR,TF,TI,TR	-

ACCESSORIES:

AC - AUTOMATIC THERMAL CUTOUT
BLE - CONTROL BOX WITH LEFT EXT.
CA - MAGNETIC CONTACTOR
D - DISCONNECT SWITCH
DS - DOOR INTERLOCK SWITCH
FC - FULL BREAK CONTACTOR
HECM- NEPTRONIC CONTROLLER
MC - MANUAL THERMAL CUTOUT
N1 - CONTROL PANEL NEMA 1
PDN - P.D. SWITCH - FIXED
SCR - SOLID STATE MODULATING CONTROL
SSR - SOLID-STATE RELAY (TRIAC)
TF - TRANSFORMER FUSE (PRIMARY)
TI - TUBULAR INCOLOY 840
TR - TRANSFORMER

REMARKS:

1. INTERLOCK DUCT HEATER WITH AHU-1 CONTROLLER. REFER TO SEQUENCE OF OPERATION.

GRAVITY HOOD SCHEDULE (BASIS OF DESIGN)

MARK	DESCRIPTION	SERVES	MANUFACTURER	MODEL	CFM	PRESSURE DROP (IN.)	FACE AREA (SQ FT)	ACCESSORIES	REMARKS
IH-1	ROOF MOUNTED INTAKE VENTILATOR	AHU-1	COOK	16 TR	1510	0.08	4.62	IS, MD, RC	1
RH-1	ROOF MOUNTED RELIEF VENTILATOR	AHU-1	COOK	16 TR	1580	0.09	4.62	IS, MD, RC	1

ACCESSORIES:

IS - INSECT SCREEN
MD - MOTORIZED DAMPER
RC - INSULATED ROOF CURB TO MATCH THE ROOF

REMARKS:

1. INTERLOCK MOTORIZED DAMPER (NORMALLY CLOSED) WITH AHU-1

AIR COOLED CONDENSING UNIT SCHEDULE (BASIS OF DESIGN)

MARK	MANUFACTURER	MODEL	SERVES	COOLING TOTAL CAPACITY MBH	COOLING OUTSIDE AIR TEMP. °F	REFRIG.	SEER /EER RATING	HEATING (HEAT PUMP ONLY) TOTAL CAPACITY MBH	HEATING OUTSIDE AIR TEMP. °F	ELECTRICAL V/PH	MCA	MOCP	ACCESSORIES	REMARKS
CU-1	AAON	CFA-007	AHU-1	61.7	95	R-410A	11.9	-	-	208/3	28	45	CG,D,HGR, HPC,VSC,W	-

ACCESSORIES:

CG - CONDENSER COIL GUARD
D - DISCONNECT
HGR - MODULATING HOT GAS REHEAT
HPC - ECM CONDENSER FAN/HEAD PRESSURE CONTROL
VSC - VARIABLE CAPACITY SCROLL COMPRESSOR
W - FACTORY STARTUP, 5-YEAR COMPRESSOR WARRANTY TWO YEAR PARTS WARRANTY, ONE YEAR LABOR AND REFRIGERANT LOSS WARRANTY.

AIR DISTRIBUTION DEVICES SCHEDULE (BASIS OF DESIGN)

MARK / CFM

MARK	MANUFACTURER	MODEL	TYPE 1	MAX AIR FLOW CFM	EXT. STATIC PRESSURE IN. OF H_2O	THROW FEET 2	NECK SIZE INCHES	PANEL SIZE INCHES	MAX NOISE CRITERIA	FINISH	ACCESSORIES	REMARKS
G1	KRUEGER	5880	DUCT/WALL	150	0.05	-	8x6	10x8	20	WHITE	-	-
S1	KRUEGER	5SHR-04	LAY-IN	180	0.08	16	6"Ø	24x24	23	WHITE	-	3
S2	KRUEGER	5SHR-04	LAY-IN	300	0.07	20	8"Ø	24x24	22	WHITE	-	3
E1	KRUEGER	EGC5	LAY-IN	900	0.02	-	22x22	24x24	20	WHITE	FR,SR	4
EG1	KRUEGER	S580H	DUCT/WALL	400	0.05	-	16x8	18x10	20	WHITE	-	-

ACCESSORIES:

FR - LAY-IN FRAME
SR - SQUARE TO ROUND ADAPTER

REMARKS/NOTES:

1. REFER TO ARCHITECTURAL PLANS FOR CEILING TYPES AND MOUNTING REQUIRED.
2. AT TERMINAL VELOCITY = 50FPM
3. FULL LOUVER FACE
4. REFER TO PLAN FOR DUCT CONNECTION SIZE

DEDICATED OUTSIDE AIR WITH ENERGY RECOVERY AIR HANDLING UNIT SCHEDULE (BASIS OF DESIGN)

MARK	MANUFACTURER	MODEL	AIR FLOW INFO. CFM SUPPLY	AIR FLOW INFO. CFM OUTSIDE AIR	STATIC PRESSURE (IN. W.C.) EXTERNAL (1)	STATIC PRESSURE (IN. W.C.) TOTAL (4)	NET CAPACITY (MBH)(2) SENSIBLE	NET CAPACITY (MBH)(2) TOTAL	COOLING INFO. AIR TEMP. (DEG. F.) ENTERING DRY BULB	ENTERING WET BULB	LEAVING DRY BULB(3)	LEAVING WET BULB(3)	AMBIENT	SEER/ EER
AHU-1	AAON	H3-BRB	1400	1400	0.5/0.5	2.4/1.1	37.9/59.1	40.5/69.6	80.2	68.2	54.5	53.4	95	9.9

MARK	HEATING INFO. CAPACITY (MBH) INPUT	OUTPUT	AIR TEMP. (DEG. F.) ENTERING	LEAVING	SUPPLY FAN MOTOR INFO. CFM	B.H.P.	H.P.	RPM	EXHAUST FAN MOTOR INFO. CFM	B.H.P.	H.P.	RPM
AHU-1	90	83.7	57.5	112.8	1400	0.90	1.34	2253	1470	0.63	1.34	2046

MARK	ENERGY RECOVERY WHEEL EFFICIENCY (%) SUMM.	WINT.	COOLING MODE TEMPERATURES OA EDB/EWB °F	RA EDB/EWB °F	EA LDB/LWB °F	SA LDB/LWB °F	HEATING MODE TEMPERATURES OA EDB/EWB °F	RA EDB/EWB °F	EA LDB/LWB °F	SA LDB/LWB °F	ELECTRICAL INFO. V/PH	MCA	MOCP	WEIGHT LBS.	ACCESSORIES	REMARKS
AHU-1	73	72	95/74	75/66	88.9/71.8	80.2/68.2	7/6	75/66	29.7/29.6	56.4/52.8	208/3	8	15	1250	DP, DS, DW, EF, F, HC, HGR, MG1, OD, SD, SF, TE, TSC TXV, UC, W	-

ACCESSORIES:

DP - STAINLESS STEEL DRAIN PAN
DS - DISCONNECT SWITCH
DW - SOLID 2" DOUBLE WALL CONSTRUCTION
EF - EXHAUST FAN - ECM WITH BACKWARD CURVED PLENUM FAN
F - 2" PLEATED MERV 8 OUTDOOR AIR AND RETURN AIR FILTERS
HC - HIGH CONDENSATE LEVEL SWITCH
HGR - MODULATING HOT GAS REHEAT
MG1 - STAINLESS STEEL FURNACE - MODULATING GAS HEAT (MINIMUM 5:1 TURNDOWN)
OD - 2-POSITION OUTDOOR AIR DAMPER
SD - RETURN AIR SMOKE DETECTOR
SF - SUPPLY FAN - ECM WITH BACKWARD CURVED PLENUM FAN
TSC - REMOTE TOUCH SCREEN CONTROLLER WITH ROOM TEMPERATURE SENSOR AND ROOM HUMIDITY SENSOR
TE - TOTAL ENERGY WHEEL
TXV - THERMAL EXPANSION VALVE
UC - UNIT CONTROLS - SPACE TEMPERATURE AND HUMIDITY
W - FACTORY STARTUP. 25 YEAR HEAT EXCHANGER WARRANTY. TWO YEAR PARTS WARRANTY, ONE YEAR LABOR WARRANTY AND REFRIGERANT LOSS WARRANTY.

REMARKS:

1. STATIC PRESSURE EXTERNAL TO UNIT, SUPPLY/EXHAUST.
2. MECHANICAL COOLING CAPACITY/EQUIVALENT COOLING CAPACITY WITH ENERGY RECOVERY.
3. UNIT LEAVING AIR TEMPERATURE.
4. UNIT STATIC PRESSURE, SUPPLY/EXHAUST.

STATE OF MISSOURI
MICHAEL L. PARSON,
GOVERNOR

STATE OF MISSOURI
LAWRENCE
DWAYNE
CALHOUN
NUMBER
E2001027888
REGISTERED PROFESSIONAL ENGINEER
2022 04 01

GHN ARCHITECTS + ENGINEERS
300 South Jefferson Avenue, Suite 301, Springfield, MO 65806
P: 417.869.0719 | F: 417.869.3044 | W: www.ghnae.com

OFFICE OF
ADMINISTRATION
DIVISION OF FACILITIES
MANAGEMENT, DESIGN
AND CONSTRUCTION

DEPT. OF PUBLIC SAFETY
MISSOURI NATIONAL GUARD

REPLACEMENT OF LATRINE
AND SHOWER FACILITIES

MONETT READINESS CENTER
300 CHAPEL DRIVE
MONETT, MISSOURI

PROJECT # T2131-01
SITE # 6279
ASSET # 8136279004

REVISION:
DATE:
REVISION:
DATE:
REVISION:
DATE:
ISSUE DATE: 04/01/2022

CAD DWG FILE: XXX
DRAWN BY: BRP
CHECKED BY: LDC
DESIGNED BY: LDC

SHEET TITLE:
HVAC SCHEDULES

SHEET NUMBER:
M-301

JENNIFER WINSLOW, PE, LLC
MECHANICAL, ELECTRICAL & PLUMBING DESIGN
608 S. ASSISI WAY
REPUBLIC, MO 65738
(417) 496-2123

ELECTRICAL GENERAL NOTES

A. WORK SHALL COMPLY WITH THE N.E.C. AND ALL LOCAL, STATE AND NATIONAL CODES.

B. COORDINATE WORK WITH THE WORK OF ALL TRADES ON THE PROJECT.

C. FIELD VERIFY THE EXISTING CONDITIONS PRIOR TO BIDDING.

D. DRAWINGS ARE DIAGRAMMATIC AND INDICATE THE GENERAL ARRANGEMENTS OR GEOMETRIC RELATIONSHIPS OF EQUIPMENT AND SERVICES. THEY ARE NOT INTENDED TO SPECIFY OR SHOW EVERY OFFSET, FITTING OR COMPONENT. DO NOT SCALE DRAWINGS. INFORMATION AND COMPONENTS SHOWN ON RISER DIAGRAMS OR DETAILS, BUT NOT SHOWN ON PLANS, AND VICE-VERSA, SHALL BE PROVIDED AS IF EXPRESSLY REQUIRED BY BOTH. SUBMIT A REQUEST FOR INFORMATION (RFI) IF INFORMATION CONFLICTS. DRAWINGS SPECIFIC TO THIS DISCIPLINE DO NOT LIMIT THE RESPONSIBILITY OF WORK REQUIRED BY CONTRACT DOCUMENTS. REFER TO ARCHITECTURAL, STRUCTURAL, ELECTRICAL AND OTHER DRAWINGS FOR ADDITIONAL INFORMATION.

E. THE DRAWINGS REFLECT A SYSTEM DESIGNED AROUND SPECIFIC REFERENCE PRODUCTS, THE SELECTION OF WHICH HAS IMPACTED THE DESIGNS OF OTHER TRADES (HVAC, ELECTRICAL, STRUCTURAL, ETC.). IF ALTERNATE MANUFACTURERS, FUEL SOURCES, SIZES, OR MODEL NUMBERS ARE SUBMITTED OR BID, IT IS THE RESPONSIBILITY OF THE CONTRACTOR(S) TO COORDINATE ALL DIFFERENCES PRIOR TO BID. NO EXTRAS WILL BE ALLOWED FOR CHANGES REQUIRED TO OTHER TRADES IF ALTERNATE EQUIPMENT IS BID OR INSTALLED AT THE CONTRACTORS OPTION.

F. EXCEPT WHERE MODIFIED BY SPECIFIC NOTATION TO THE CONTRARY, IT SHALL BE UNDERSTOOD THAT THE INDICATION AND/OR DESCRIPTION OF ANY ITEM, IN THE DRAWINGS OR SPECIFICATIONS OR BOTH, CARRIES WITH IT THE INSTRUCTION TO FURNISH AND INSTALL THE ITEM, REGARDLESS OF WHETHER OR NOT THIS INSTRUCTION IS EXPLICITLY STATED AS PART OF THE INDICATION OR DESCRIPTION.

G. LIGHT FIXTURES SHALL BE FURNISHED AND INSTALLED BY THE ELECTRICAL CONTRACTOR, UNLESS NOTED OTHERWISE.

H. SINGLE PHASE BRANCH CIRCUITS SHALL NOT SHARE NEUTRALS.

I. PROVIDE THE REQUIRED POWER FOR ALL MECHANICAL OR PLUMBING EQUIPMENT SPECIFIED IN THE CONTRACT DOCUMENTS, EVEN IF NOT SHOWN ON THE POWER PLANS.

J. VERIFY THE POWER REQUIREMENTS OF MECHANICAL AND PLUMBING EQUIPMENT, WITH THE EQUIPMENT SUPPLIERS, PRIOR TO PREPARING SUBMITTALS OR ORDERING ANY SWITCHGEAR OR EQUIPMENT. SUPPLIED PLUMBING AND/OR MECHANICAL EQUIPMENT MAY VARY FROM THE EQUIPMENT SPECIFIED IN THE PLANS.

K. ALL RACEWAYS SHALL BE CONCEALED WHERE POSSIBLE, WHERE CONDITIONS REQUIRE EXPOSED ROUTING, ROUTE CONDUITS IN A NEAT MANNER PARALLEL WITH THE BUILDING LINES AND AS HIGH AS POSSIBLE.

L. PROVIDE A GROUNDING CONDUCTOR IN RACEWAYS, SIZED PER THE N.E.C.

M. PROVIDE CONCRETE HOUSEKEEPING PADS FOR ALL FLOOR/GROUND MOUNTED EQUIPMENT. PADS SHALL BE 4" LARGER THAN THE EQUIPMENT, REFER TO THE SPECIFICATIONS FOR CONCRETE REQUIREMENTS.

N. REFER TO THE SPECIFICATIONS FOR MORE INFORMATION.

O. EMERGENCY ILLUMINATION UNITS SHALL BE CONNECTED TO THE LOCAL NORMAL LIGHTING CIRCUIT AHEAD OF ANY LOCAL SWITCHING, REFER TO N.E.C. SECTION 700-12(e) FOR INFORMATION.

P. FOR EACH HVAC TEMPERATURE SENSOR, THERMOSTAT OR HUMIDISTAT PROVIDE A JUNCTION BOX, WITH A SINGLE GANG MUD RING, AT 48" ABOVE THE FINISH FLOOR WITH A 3/4" CONDUIT (WITH A PULL STRING) TO ABOVE THE CEILING FOR THE HVAC CONTROLS. HVAC CONTROLS WIRING AND DEVICES INSTALLED BY THE MECHANICAL CONTROLS CONTRACTOR.

ELECTRICAL DEMOLITION GENERAL NOTES

1. FIELD VERIFY EXISTING CONDITIONS PRIOR TO BID TO DETERMINE FULL EXTENT OF WORK. DEVICES ARE SHOWN IN APPROXIMATE LOCATIONS.
2. REPLACE BROKEN OR MISSING COVERPLATES ON ALL DEVICES TO REMAIN WHETHER SO INDICATED OR NOT.
3. PROVIDE OWNER WITH WRITTEN DOCUMENTATION AS TO CONDITION OF ALL SYSTEMS PRIOR TO BEGINNING WORK. ALL SYSTEMS SHALL BE IN PROPER ELECTRICAL OPERATION UPON COMPLETION OF WORK WHETHER THEY CURRENTLY OPERATE OR NOT.
4. DISCONNECT, REMOVE AND CLEAN ALL LIGHT FIXTURES NOTED TO REMAIN. PAINT AS REQUIRED. REPLACE DAMAGED OR YELLOWING LENSES, BALLASTS AND LAMPS WITH NEW ONES AND REINSTALL AS BEFORE.
5. DISCONNECT AND REMOVE ALL OUTLETS NOTED TO BE REMOVED OR RELOCATED. INSURE ELECTRICAL CONTINUITY OF CIRCUIT AFTER DEVICES HAVE BEEN REMOVED.
6. ASSIST OTHER TRADES BY DISMANTLING ELECTRICAL SYSTEMS IN AREAS BEING REWORKED. RE-ROUTE RACEWAYS AS REQUIRED TO CLEAR LIMITS OF DEMOLITION.
7. DISCONNECT AND REMOVE ALL DEVICES ALONG WALLS BEING REFINISHED. REINSTALL DEVICES UPON COMPLETION OF WORK PROVIDING NECESSARY BACKING TO INSURE DEVICES ARE MOUNTED FLUSH.
8. PROVIDE TYPE WRITTEN DIRECTORY AT EXISTING PANELBOARDS INDICATING ANY CHANGES IN CIRCUITRY. SWITCH ALL SPARE CIRCUIT BREAKERS TO THEIR OFF POSITION AND NOTE AS SPARE ON DIRECTORY.

ELECTRICAL SYMBOLS LEGEND

NOTE: ALL SYMBOLS MAY NOT APPEAR ON EVERY PLAN

Symbol	Description
A a	LED LIGHT FIXTURE A=FIXTURE TYPE a=SWITCH LABEL (IF USED)
A EM	FIXTURE ON EMERGENCY POWER (PART OR ALL)
A	LINEAR FIXTURE
A OR A OR A	LIGHT FIXTURE
EM	EMERGENCY ILLUMINATION LIGHT FIXTURE (WALL MOUNTED)
$	SINGLE POLE SWITCH
$M	MANUAL MOTOR STARTER
$OS	WALL MOUNTED OCCUPANCY SWITCH
	DUPLEX RECEPTACLE
	QUADRA-PLEX RECEPTACLE
AC	DUPLEX INSTALLED ABOVE COUNTER
GFI	DUPLEX RECEPTACLE WITH GROUND FAULT PROTECTION
WP	RECEPTACLE w/WEATHERPROOF IN-USE COVER
OS a	CEILING MOUNTED OCCUPANCY SENSOR (a = TYPE)
J OR J a	JUNCTION BOX
? ? SURFACE FLUSH	PANELBOARDS
DS-?	NON-FUSED DISCONNECT SWITCH
DS-?	FUSED DISCONNECT SWITCH
	CONDUIT CONCEALED
	CONDUIT/CIRCUIT HOMERUN
AFF	ABOVE FINISH FLOOR
GFI	GROUND FAULT INTERRUPTING
NF	NON-FUSIBLE
VFD	VARIABLE FREQUENCY DRIVE
WP	WEATHERPROOF DEVICE OR COVER
TS	TIMER SWITCH
NS	NON-SWITCHED
NL	NIGHT LIGHT FIXTURE (NON-SWITCHED)

STATE OF MISSOURI
MICHAEL L. PARSON,
GOVERNOR

Jennifer Winslow
Digitally signed by Jennifer Winslow, PE
2022.03.28 23:09:02 -05'00'

STATE OF MISSOURI
JENNIFER
LANE WINSLOW
NUMBER
E-2009001145
PROFESSIONAL ENGINEER
2022 04 01

JENNIFER L WINSLOW, ENGINEER
MO# E-2009001145
MO COA# E-2020011618
THIS SEAL IS FOR ENGINEERING INFORMATION ONLY

GHN ARCHITECTS + ENGINEERS
300 South Jefferson Avenue, Suite 301, Springfield, MO 65806
P: 417.869.0719 | F: 417.869.3044 | W: www.ghnae.com

OFFICE OF
ADMINISTRATION
DIVISION OF FACILITIES
MANAGEMENT, DESIGN
AND CONSTRUCTION

DEPT. OF PUBLIC SAFETY
MISSOURI NATIONAL GUARD
DEPT. OF ADJUTANT GENERAL

REPLACEMENT OF LATRINE
AND SHOWER FACILITIES

MONETT READINESS CENTER
300 CHAPEL DRIVE
MONETT, MISSOURI

PROJECT # T2131-01
SITE # 6279
ASSET # 8136279004

REVISION:
DATE:
REVISION:
DATE:
REVISION:
DATE:
ISSUE DATE: 04/01/2022

CAD DWG FILE: XXX
DRAWN BY: BRP
CHECKED BY: JLW
DESIGNED BY: JLW

SHEET TITLE:

ELECTRICAL GEN NOTES &
LEGEND

SHEET NUMBER:

E-001

18 OF 20 SHEETS
APRIL 1, 2022

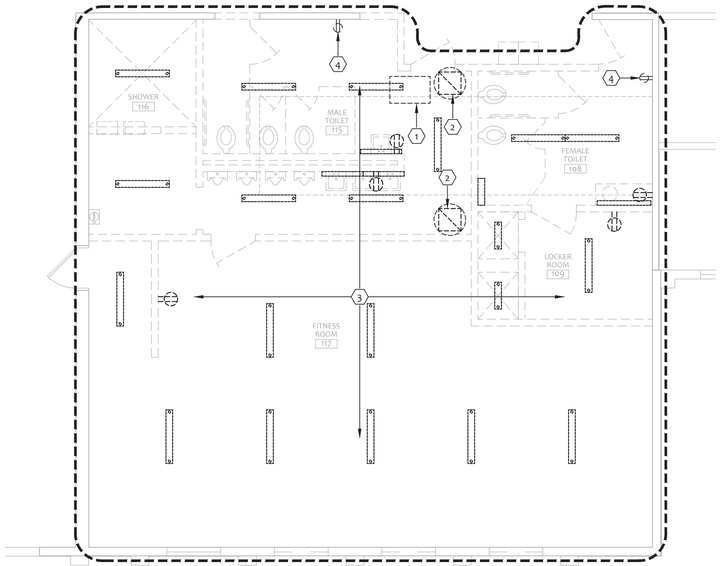

1 ELECTRICAL DEMO PLAN

0 1' 2' 4' 8'

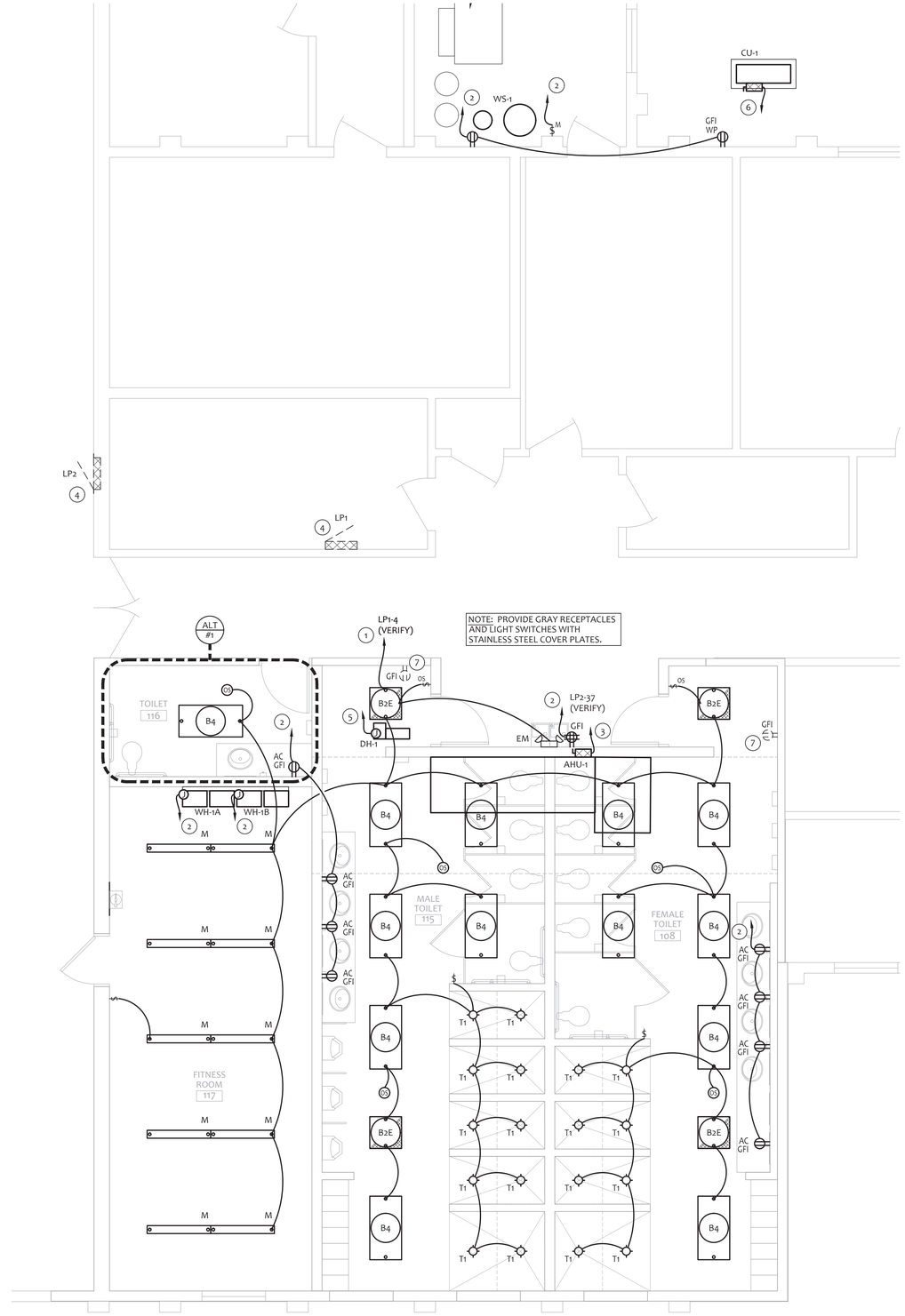

2 ELECTRICAL PLAN

0 6" 1' 2' 4' 6'

DEMO KEY NOTES

1. DEMO POWER TO HVAC SYSTEM COMPLETE. REMOVE CIRCUIT BACK TO ELECTRICAL PANEL. FIELD VERIFY EXISTING INSTALLATION. COORDINATE WITH MECHANICAL CONTRACTOR.
2. DEMO POWER TO EXHAUST FAN COMPLETE. REMOVE CIRCUIT BACK TO ELECTRICAL PANEL. FIELD VERIFY EXISTING INSTALLATION. COORDINATE WITH MECHANICAL CONTRACTOR.
3. REMOVE LIGHTS, SWITCHES, AND RECEPTACLES IN DEMO AREA. DEMO CIRCUITRY TO DEVICES BEING REMOVED, BUT MAINTAIN POWER TO DEVICES IN ADJACENT/UNDISTURBED AREAS. FIELD VERIFY EXISTING CIRCUITRY.
4. EXISTING RECEPTACLE TO REMAIN. FIELD VERIFY CIRCUITRY AND RE-CIRCUIT WITH NEW RECEPTACLES AS REQUIRED.

KEY NOTES

1. CIRCUIT NEW LIGHTS TO LIGHTING CIRCUIT ABANDONED DURING DEMOLITION. FIELD VERIFY CIRCUITRY AND ROUTING OF ADJACENT CIRCUITS THROUGH SHARED HOMERUN.
2. CIRCUIT TO NEW OR AVAILABLE EXISTING 20A/1P BREAKER IN NEAREST ELECTRICAL PANEL. FIELD VERIFY.
3. AIR HANDLING UNIT IN THE ATTIC. CIRCUIT TO NEW 15A/3P BREAKER IN NEAREST ELECTRICAL PANEL. FIELD VERIFY. FACTORY PROVIDED DISCONNECT .
4. APPROXIMATE LOCATION OF EXISTING ELECTRICAL PANEL. FIELD VERIFY.
5. CIRCUIT TO NEW 40A/3P BREAKER IN NEAREST ELECTRICAL PANEL WITH #8 WIRES & #10 GROUND IN 3/4" CONDUIT. FIELD VERIFY PANEL AVAILABILITY AND LOAD CAPACITY. FACTORY PROVIDED DISCONNECT .
6. CIRCUIT TO NEW 45A/3P BREAKER IN NEAREST ELECTRICAL PANEL WITH #8 WIRES & #10 GROUND IN 3/4" CONDUIT. FIELD VERIFY PANEL AVAILABILITY AND LOAD CAPACITY. FACTORY PROVIDED DISCONNECT .
7. EXISTING RECEPTACLE TO REMAIN. FIELD VERIFY CIRCUITRY AND RE-CIRCUIT WITH NEW RECEPTACLES AS REQUIRED.

JENNIFER WINSLOW, PE, LLC
MECHANICAL, ELECTRICAL & PLUMBING DESIGN
608 S. ASSISI WAY
REPUBLIC, MO 65738
(417) 496-2123

STATE OF MISSOURI
MICHAEL L. PARSON,
GOVERNOR

Jennifer Winslow — Digitally signed by Jennifer Winslow, PE 2022.03.28 23:09:34 -05'00'

STATE OF MISSOURI — JENNIFER LANE WINSLOW — NUMBER E-2009001145 — PROFESSIONAL ENGINEER — 2022 04 01

JENNIFER L WINSLOW, ENGINEER
MO# E-2009001145
MO COA# E-2020011618
THIS SEAL IS FOR ENGINEERING INFORMATION ONLY

GHN ARCHITECTS + ENGINEERS
300 South Jefferson Avenue, Suite 301, Springfield, MO 65806
P: 417.869.0719 | F: 417.869.3044 | W: www.ghnae.com

OFFICE OF ADMINISTRATION
DIVISION OF FACILITIES MANAGEMENT, DESIGN AND CONSTRUCTION

DEPT. OF PUBLIC SAFETY
MISSOURI NATIONAL GUARD
DEPT. OF ADJUTANT GENERAL

REPLACEMENT OF LATRINE AND SHOWER FACILITIES

MONETT READINESS CENTER
300 CHAPEL DRIVE
MONETT, MISSOURI

PROJECT # T2131-01
SITE # 6279
ASSET # 8136279004

REVISION:
DATE:
REVISION:
DATE:
REVISION:
DATE:
ISSUE DATE: 04/01/2022

CAD DWG FILE: XXX
DRAWN BY: BRP
CHECKED BY: JLW
DESIGNED BY: JLW

SHEET TITLE:
ELECTRICAL PLANS

SHEET NUMBER:
E-101

19 OF 20 SHEETS
APRIL 1, 2022

JENNIFER WINSLOW, PE, LLC
MECHANICAL, ELECTRICAL & PLUMBING DESIGN
608 S. ASSISI WAY
REPUBLIC, MO 65738
(417) 496-2123

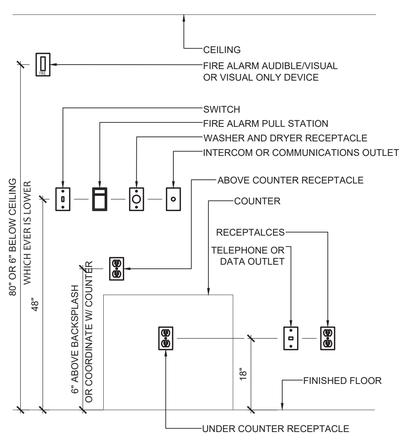

1 TYPICAL MOUNTING HEIGHTS
NOT TO SCALE

LIGHT FIXTURE SCHEDULE

MARK	BASIS OF DESIGN		DESCRIPTION	FINISH	MOUNTING	LAMP	VOLTAGE	REMARKS
	MANUFACTURER	MODEL						
B2E	LITHONIA	2BLTX2-33L-ADSM-EZ1-LP840-EL14L	2x2 LED TROFFER - EMERGENCY	WHITE	SURFACE	3,300 LUMEN 4,000K, 27W, LED	120	1
	WILLIAMS	LT-22-L27/840-AF-EM/10W-DIM-UNV LT-22-SMK-W	2x2 LED TROFFER - EMERGENCY	WHITE	SURFACE	2,700 LUMEN 4,000K, 22W, LED	120	1
	COLUMBIA	LCAT22-40LWSM-EDU-ELL14	2x2 LED TROFFER - EMERGENCY	WHITE	SURFACE	2,700 LUMEN 4,000K, 23W, LED	120	1
B4	LITHONIA	2BLTX4-40L-ADSM-EZ1-LP840	2x4 LED TROFFER	WHITE	SURFACE	4,000 LUMEN 4,000K, 32W, LED	120	-
	WILLIAMS	LT-24-L40/840-AF-DIM-UNV LT-24-SMK-W	2x4 LED TROFFER	WHITE	SURFACE	4,000 LUMEN 4,000K, 32W, LED	120	-
	COLUMBIA	LCAT24-40LWSM-EDU	2x4 LED TROFFER	WHITE	SURFACE	4,000 LUMEN 4,000K, 36W, LED	120	-
M	LITHONIA	CLX-L48-3500LM-SEF-FDL-MVOLT-GZ10-40K-80CRI-WH	4' LED STRIP - SURFACE MOUNT TO UNISTRUT SPANNED BETWEEN STEEL TRUSSES	WHITE	SURFACE	3,500 LUMEN 4,000K, 27W, LED	120	-
	WILLIAMS	75-4-L30/840-DIM-UNV	4' LED STRIP - SURFACE MOUNT TO UNISTRUT SPANNED BETWEEN STEEL TRUSSES	WHITE	SURFACE	3,000 LUMEN 4,000K, 20W, LED	120	-
	COLUMBIA	LCL4-30ML-EDU	4' LED STRIP - SURFACE MOUNT TO UNISTRUT SPANNED BETWEEN STEEL TRUSSES	WHITE	SURFACE	3,000 LUMEN 4,000K, 42W, LED	120	-
T1	LITHONIA	LDN6-40/20-L06WH-MVOLT-EZ10	6" ROUND LED DOWNLIGHT, WET RATED	WHITE	RECESSED	2,000 LUMEN 4,000K, 23W, LED	120	-
	WILLIAMS	6DR-TL-L20/840-DIM-UNV-SW-OF-WH-WET/CC	6" ROUND LED DOWNLIGHT, WET RATED	WHITE	RECESSED	2,000 LUMEN 4,000K, 20W, LED	120	-
	PRESCOLITE	LFR6RD-M-20L40K8-MD-DM1/ LFR-6RD-T-WC/LFR-6RD-H	6" ROUND LED DOWNLIGHT, WET RATED	WHITE	RECESSED	2,000 LUMEN 4,000K, 15W, LED	120	-
EM	LITHONIA	EU2C	LED EMERGENCY FIXTURE	WHITE	SURFACE/WALL	LED	120/277	1
	WILLIAMS	EMER/CP/ADJ/LED-WHT	LED EMERGENCY FIXTURE	WHITE	SURFACE/WALL	LED	120/277	1
	COMPASS	CU2SQ	LED EMERGENCY FIXTURE	WHITE	SURFACE/WALL	LED	120/277	1

GENERAL NOTES:

A. COORDINATE AND VERIFY THE COLORS AND FINISHES OF ALL FIXTURES WITH THE ARCHITECT AND/OR OWNER.
B. PROVIDE ALL NECESSARY FRAMING KITS FOR FIXTURES MOUNTED IN CEILINGS.
C. PROVIDE ALL NECESSARY STEMS, ACCESSORIES, HARDWARE AND ASSOCIATED EQUIPMENT AND MATERIAL FOR A COMPLETE INSTALLATION.
D. COORDINATE THE EXACT MOUNTING HEIGHT, LOCATION AND DETAILS WITH THE SITE CONDITIONS AND THE ARCHITECTURAL PLANS PRIOR TO ROUGHING IN.
E. ALL INTERIOR FIXTURES SHALL HAVE COLOR TEMPERATURE OF 4000K UNLESS NOTED OTHERWISE.

REMARKS:

1. 90 MINUTE EMERGENCY BATTERY
2. SEE ARCHITECTURAL FOR MOUNTING HEIGHT.

STATE OF MISSOURI
MICHAEL L. PARSON,
GOVERNOR

Jennifer Winslow
Digitally signed by Jennifer Winslow, PE
2022.03.28 23:08:32

STATE OF MISSOURI
JENNIFER
LANE WINSLOW
NUMBER
E-2009001145
PROFESSIONAL ENGINEER
2022 04 01

JENNIFER L WINSLOW, ENGINEER
MO# E-2009001145
MO COA# E-2020011618
THIS SEAL IS FOR ENGINEERING INFORMATION ONLY

GHN ARCHITECTS + ENGINEERS
300 South Jefferson Avenue, Suite 301, Springfield, MO 65806
P: 417.869.0719 | F: 417.869.3044 | W: www.ghnae.com

OFFICE OF ADMINISTRATION
DIVISION OF FACILITIES MANAGEMENT, DESIGN AND CONSTRUCTION

DEPT. OF PUBLIC SAFETY
MISSOURI NATIONAL GUARD
DEPT. OF ADJUTANT GENERAL

REPLACEMENT OF LATRINE AND SHOWER FACILITIES

MONETT READINESS CENTER
300 CHAPEL DRIVE
MONETT, MISSOURI

PROJECT # T2131-01
SITE # 6279
ASSET # 8136279004

REVISION:
DATE:
REVISION:
DATE:
REVISION:
DATE:
ISSUE DATE: 04/01/2022

CAD DWG FILE: XXX
DRAWN BY: BRP
CHECKED BY: JLW
DESIGNED BY: JLW

SHEET TITLE:
ELECTRICAL SCHEDULES & DETAILS

SHEET NUMBER:
E-201

20 OF 20 SHEETS
APRIL 1, 2022