FITNESS CENTER - STORM SHELTER

CAMP CLARK TRAINING SITE
NEVADA, MISSOURI

OWNER:	STATE OF MISSOURI MIKE L. PARSON, GOVERNOR DEPARTMENT OF PUBLIC SAFETY MISSOURI NATIONAL GUARD OFFICE OF ADJUTANT GENERAL
PROJECT MANAGEMENT:	OFFICE OF ADMINISTRATION, DIVISION OF FACILITIES MANAGEMENT, DESIGN & CONSTRUCTION

DESIGNER:	GLMV Architecture, Inc.
PROJECT NUMBER:	T1930-01
SITE NUMBER:	6275
ASSET NUMBER:	8136274078

GLMVArchitecture
9229 Ward Parkway, Kansas City, MO 64114
Tel: (816) 444-4200
www.glmv.com

STATE OF MISSOURI
RYAN P. KREMER
NUMBER A-2016015514
07/02/2020
ARCHITECT

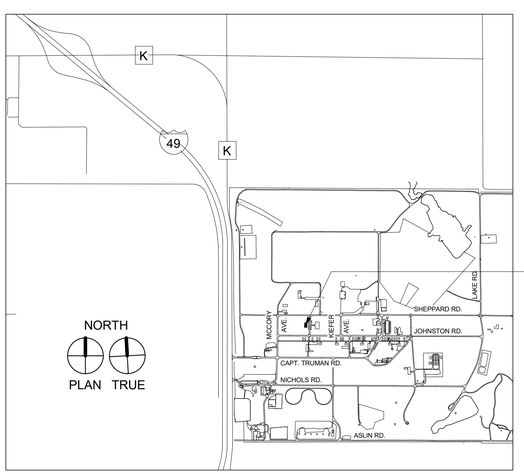

VICINITY MAP

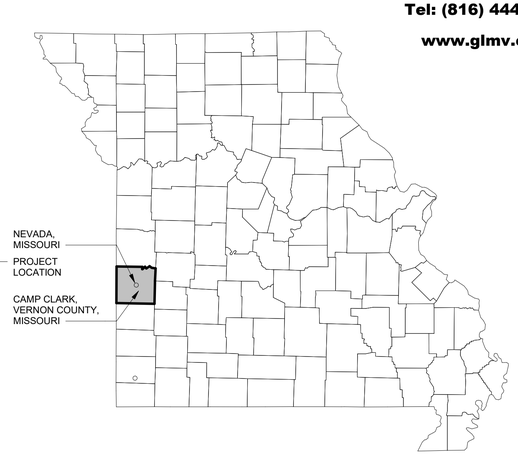

LOCATION MAP

INDEX OF DRAWINGS

GENERAL		
1	G-001	COVER SHEET & INDEX OF DRAWINGS
2	G-002	LIFE SAFETY PLAN & CODE ANALYSIS
CIVIL		
3	C-101	TOPOGRAPHICAL SURVEY
4	C-102	SITE PLAN
5	C-103	GRADING, DRAINAGE & EC PLAN
6	C-104	UTILITY PLAN
7	C-501	DETAILS
8	C-502	DETAILS
STRUCTURAL		
9	S-001	GENERAL NOTES
10	S-002	GENERAL NOTES, ABBREVIATIONS, MISCELLANEOUS
11	S-101	FOUNDATION & ROOF PLANS
12	S-201	EXTERIOR WALL ELEVATIONS
13	S-301	SECTIONS
ARCHITECTURAL		
14	A-001	SYMBOLS, ABBREVIATIONS & NOTES
15	A-101	FLOOR & DIMENSION PLANS
16	A-111	ROOF PLAN, RCP PLAN & DETAILS
17	A-201	BUILDING ELEVATIONS & SECTIONS
18	A-311	WALL SECTIONS & DETAILS
19	A-401	ENLARGED PLAN, INTERIOR ELEV. & DETAILS
20	A-402	INTERIOR ELEVATIONS & DETAILS
21	A-501	DETAILS
22	A-601	PARTITION TYPES & DETAILS
23	A-611	SCHEDULES & DETAILS
INTERIORS		
24	I-101	FINISH SCHED., EQUIPMENT PLAN & DETAILS
25	I-111	SIGNAGE PLAN, SCHEDULE & DETAILS
MECHANICAL		
26	MPE101	SYMBOLS LEGEND
27	M-101	MECHANICAL PLAN & SCHEDULES
28	M-401	MECHANICAL DETAILS
PLUMBING		
29	P-101	PLUMBING & FIRE PROTECTION PLANS
30	P-401	PLUMBING SCHEDULES & DETAILS
ELECTRICAL		
31	E-100	ELECTRICAL SITE PLAN
32	E-101	ELECTRICAL PLANS
33	E-401	ELECTRICAL DETAILS & SCHEDULES

SHEET NUMBER:
G-001
1 OF 33 SHEETS

BID DOCUMENTS 07/02/2020

UL-LISTED FIRE-RATED ASSEMBLIES

NOTES

Design/System/Construction/Assembly Usage Disclaimer:

1. Authorities Having Jurisdiction should be consulted in all cases as to the particular requirements covering the installation and use of UL Certified products, equipment, system, devices, and materials.
2. Authorities Having Jurisdiction should be consulted before construction.
3. Fire resistance assemblies and products are developed by the design submitter and have been investigated by UL for compliance with applicable requirements. The published information cannot always address every construction nuance encountered in the field.
4. When field issues arise, it is recommended the first contact for assistance be the technical service staff provided by the product manufacturer noted for the design. Users of fire resistance assemblies are advised to consult the general Guide Information for each product category and each group of assemblies. The Guide Information includes specifics concerning alternate materials and alternate methods of construction.
5. Only products which bear UL's Mark are considered Certified.
6. References to Canadian UL Listings have been removed.
7. Some alternate construction materials or optional components noted in the respective listing have been removed. Includes construction not applicable to this project. See original listing on UL website for complete listing.
8. The appearance of a company's name or product in this database does not in itself assure that products so identified have been manufactured under UL's Follow-Up Service. Only those products bearing the UL Mark should be considered to be Certified and covered under UL's Follow-Up Service. Always look for the Mark on the product.
9. UL permits the reproduction of the material contained in the Online Certification Directory subject to the following conditions:
   A. The Guide Information, Assemblies, Constructions, Designs, Systems, and/or Certifications (files) must be presented in their entirety and in a non-misleading manner, without any manipulation of the data (or drawings).
   B. The statement "Reprinted from the Online Certifications Directory with permission from UL" must appear adjacent to the extracted material. In addition, the reprinted material must include a copyright notice in the following format: "© 2020 UL LLC"

UL LISTED MATERIALS AND PRODUCTS NOTE:

A. SPECIFIC MANUFACTURERS AS NOTED WITHIN THE UL LISTINGS REFERENCED AND INCLUDED WITHIN THIS CONSTRUCTION DOCUMENT SET SHALL BE CONSIDERED AS A BASIS-OF-DESIGN.

B. ADDITIONAL MANUFACTURERS SHALL BE CONSIDERED PROVIDED THAT:
   1. PRODUCT UNDER CONSIDERATION IS INTENDED FOR USE IN THE SAME APPLICATION;
   2. IS COMPRISED OF THE SAME COMPOSITION, MATERIALS, ETC. AS THE BASIS-OF-DESIGN; AND
   3. SUCH PRODUCTS SHALL BEAR THE UL CERTIFICATION MARK.

C. OTHER ALTERNATIVE UL LISTINGS OR BUILDING CODE ASSEMBLIES PROVIDING THE SAME LEVEL OF FIRE PROTECTION SHALL BE CONSIDERED FOR THE APPLICATION WHICH THE LISTING IS INTENDED. THIS REQUIRES PRELIMINARY REVIEW AND APPROVAL BY THE ARCHITECT PRIOR TO SUBMITTAL.

BXUV - Fire Resistance Ratings - ANSI/UL 263 Certified for United States

See General Information for Fire-resistance Ratings - ANSI/UL 263 Certified for United States Design Criteria and Allowable Variances.

Design No. U905

June 10, 2019

Bearing Wall Rating — 2 HR.
Nonbearing Wall Rating — 2 HR

This design was evaluated using a load design method other than the Limit States Design Method (e.g., Working Stress Design Method). For jurisdictions employing the Limit States Design Method, such as Canada, a load restriction factor shall be used — See Guide BXUV or BXUV7

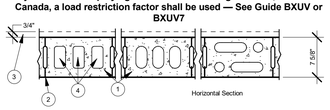

1. **Concrete Blocks*** — Various designs. Classification D-2 (2 hr). See Concrete Blocks category for list of eligible manufacturers.
2. **Mortar** — Blocks laid in full bed of mortar, nom. 3/8 in. thick, of not less than 2-1/4 and not more than 3-1/2 parts of clean sharp sand to 1 part Portland cement (proportioned by volume) and not more than 50 percent hydrated lime (by cement volume). Vertical joints staggered.
3. **Portland Cement Stucco or Gypsum Plaster —** [*removed*].
4. **Loose Masonry Fill —** If all core spaces are filled with loose dry expanded slag, expanded clay or shale (Rotary Kiln Process), water repellant vermiculite masonry fill insulation, or silicone treated perlite loose fill insulation add 2 hr to classification.
5. **Foamed Plastic* —** (Optional-Not Shown) — 1-1/2 in. thick max, 4 ft wide sheathing attached to concrete blocks (Item 1).
   ATLAS ROOFING CORP — "EnergyShield Pro Wall Insulation", "EnergyShield Pro 2 Wall Insulation", EnergyShield CGF Pro and EnergyShield Ply Pro
   CARLISLE COATINGS & WATERPROOFING INC — Type R2+ SHEATHE
   FIRESTONE BUILDING PRODUCTS CO L L C — "Enverge™ CI Foil Exterior Wall Insulation" and "Enverge™ CI Glass Exterior Wall Insulation"
   HUNTER PANELS, A DIVISION OF CARLISLE CONSTRUCTION MATERIALS, LLC — Types "Xci-Class A", "Xci Foil (Class A)", "Xci 286"
   RMAX OPERATING L L C — Types "TSX-8500", "ECOMAXci FR", "TSX-8510", "ECOMAX xi FR White", "ECOMAXci", "ECOMAXci FR Air Barrier", "Thermasheath-XP", "Thermasheath", "Durasheath", "Thermasheath-3", "Durasheath-3".
   THE DOW CHEMICAL CO — Types Thermax Sheathing, Thermax Light Duty Insulation, Thermax Heavy Duty Insulation, Thermax Metal Building Board, Thermax White Finish Insulation, Thermax ci Exterior Insulation, Thermax XARMOR ci Exterior Insulation, Thermax IH Insulation, Thermax Plus Liner Panel, Thermax Heavy Duty Plus (HDP) and TUFF-R™ ci Insulation

5A. **Building Units —** [*removed*]

* Indicates products shall bear the UL Certification Mark for jurisdictions employing the UL Certification.

Last Updated on 2019-06-10

XHEZ - Through-penetration Firestop Systems
System No. W-J-2029
May 19, 2005
F Ratings — 1 and 2 Hr (See Item 2)
T Ratings — 0, 1 and 2 Hr (See Item 2)

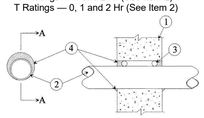

SECTION A-A

1. **Wall Assembly —** Min 4-1/2 in. (114 mm) thick lightweight or normal weight (100-150 pcf or 1600 - 2400 kg/m3) concrete. Wall may also be constructed of any UL Classified **Concrete Blocks***. Diam of opening shall be 7/8 to 1 in. (22 to 25 mm) larger than the outside diam of nonmetallic pipe or conduit (Item 2).
   See **Concrete Blocks (CAZT)** category in the Fire Resistance Directory for names of manufacturers.

2. **Through Penetrants —** One nonmetallic pipe or conduit to be centered within the firestop system. The annular space for max 1-1/4 in. (32 mm) diam pipe or conduit shall be min 0 in. (0 mm, point contact) to max 7/8 in. (22 mm). The annular space for pipe or conduit larger than nom 1-1/4 in. (32 mm) diam shall be min 1/2 in. (13 mm) to max 1 in. (25 mm). Pipe or conduit to be rigidly supported on both sides of wall assembly. The following types and sizes of nonmetallic pipes or conduits may be used:
   A. **Polyvinyl Chloride (PVC) Pipe —** Nom 2 in. (51 mm) diam (or smaller) Schedule 40 solid core PVC pipe for use in closed (process or supply) or vented (drain, waste or vent) piping system.
   B. **Polyvinyl Chloride (PVC) Pipe —** Nom 3 in. (76 mm) diam (or smaller) Schedule 40 solid core PVC pipe for use in closed (process or supply) piping system.
   C. **Chlorinated Polyvinyl Chloride (CPVC) Pipe —** Nom 3 in. (76 mm) diam (or smaller) SDR11 CPVC pipe for use in closed (process or supply) piping systems.
   D. **Rigid Nonmetallic Conduit++ —** Nom 3 in. (76 mm) diam (or smaller) Schedule 40 PVC conduit installed in accordance with the National Electrical Code (NFPA No. 70).
   E. **Electrical Nonmetallic Tubing (ENT)++ —** Nom 1 in. (25 mm) diam (or smaller) ENT formed of PVC, installed in accordance with the National Electrical Code (NFPA No. 70).
   F. **Acrylonitrile Butadiene Styrene (ABS) Pipe —** Nom. 2 in. (51 mm) diam (or smaller) Schedule 40 solid core or cellular core ABS pipe for use in closed (process or supply) or vented (drain, waste or vent) piping systems.
   See **Rigid Nonmetallic Conduit** (DZKT) and **Electrical Nonmetallic Tubing** (FKHU) categories in the UL Electrical Construction Equipment Directory for names of manufacturers.

   The hourly T Rating is dependent on the hourly rating of the wall assembly, the pipe or conduit size and whether the pipe is intended for use as a closed or vented system, as shown in the following table:

Nom Pipe Diam In. (mm)	Wall Assem Rating Hr	Closed (c) or Vented (v)	T Rating Hr
1/2 to 3 (13 - 76)	1	c	1
1/2 to 1-1/4 (13 - 32)	1	v	1
1/2 to 1-1/4 (13 - 32)	2	c	2
1/2 to 1-1/4 (13 - 32)	2	v	1
2 (51)	1	v	0
2 (51)	2	v	0

3. **Packing Material —** (Optional) — Mineral wool or fiberglass insulation or polyethylene backer rod firmly packed into opening as a permanent form. Packing material to be recessed from both surfaces of wall as required to accommodate the required thickness of caulk fill material.

4. **Fill, Void or Cavity Materials* — Caulk, Sealant or Putty —** Min thickness of 5/8 in. (16 mm) and 1-1/4 in. (32 mm) of caulk or putty for 1 and 2 hr rated wall assemblies, respectively, applied within annulus between pipe or conduit and periphery of wall opening, flush with both surfaces of wall assembly. At the point contact location between pipe or conduit and wall, a min 1/2 in. (13 mm) diam bead of caulk or putty shall be applied at the pipe or conduit/wall interface on both surfaces of wall assembly.
   3M COMPANY — CP 25WB+, MP+ Stix, IC 25WB+ caulk or FB-3000 WT sealant. (Note: CP 25WB+ not suitable for use with CPVC pipes.)

* Indicates products shall bear the UL Certification Mark for jurisdictions employing the UL Certification.

XHEZ - Through-penetration Firestop Systems
System No. W-J-1311
May 30, 2019
F Ratings — 1 and 2 Hr (See Item 3)
T Rating — 0 Hr
L Rating At Ambient — Less than 1 CFM/sq ft
L Rating at 400°F — 3 CFM/sq ft

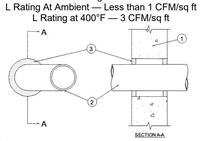

1. Wall Assembly — Min 5 in. (127 mm) thick reinforced lightweight or normal weight (100-150 pcf or 1600 - 2400 kg/m3) concrete wall. Wall may also be constructed of any UL Classified Concrete Blocks*. Max diam of opening is 5-1/2 in. (127 mm).
See **Concrete Blocks** (CAZT) category in the Fire Resistance Directory for names of manufacturers.

2. Through Penetrants — One metallic pipe, conduit or tubing installed either concentrically or eccentrically within the firestop system. The annular space between penetrant and periphery of opening shall be min 0 in. (0 mm) (point contact) to max 1 in. (25 mm). The penetrant may be installed at an angle not greater than 45 degrees from perpendicular. Penetrant to be rigidly supported on both sides of wall assembly. The following types and sizes of penetrants may be used:
   A. Steel Pipe — Nom 4 in. (102 mm) diam (or smaller) Schedule 10 (or heavier) steel pipe.
   B. Iron Pipe — Nom 4 in. (102 mm) diam (or smaller) cast or ductile iron pipe.
   C. Conduit — Nom 4 in. (102 mm) diam (or smaller) rigid steel conduit or steel electrical metallic tubing (EMT).
   D. Copper Tubing — Nom 4 in. (102 mm) diam (or smaller) Type M (or heavier) copper tubing.
   E. Copper Pipe — Nom 4 in. (102 mm) diam (or smaller) Regular (or heavier) copper pipe.

3. Fill, Void or Cavity Materials* — Caulk — Min 5/8 in. (16 mm) thickness of caulk applied within annulus, flush with both surfaces of wall assembly. Min 1/2 in. (13 mm) diam bead of caulk shall be applied at the penetrant/concrete interface at the point contact location on both surfaces of wall assembly.
   SHERWIN WILLIAMS CO — WHITE LIGHTING FlameBuster High heat Silicone or WHITE LIGHTING FlameBuster Intumescent Silicone

* Indicates products shall bear the UL Certification Mark for jurisdictions employing the UL Certification.

XHBN - Joint Systems
See General Information for Joint Systems
System No. HW-D-0098
June 04, 2010
Assembly Rating — 1 and 2 Hr (See Item 4)
Nominal Joint Width - 1 in.
L Rating At Ambient — Less Than 1 CFM/Lin Ft (See Item 4)
L Rating At 400°F — Less Than 1 CFM/Lin Ft (See Item 4)
Class II and III Movement Capabilities - 12.5% Compression or Extension

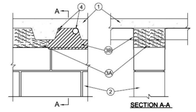

1. Floor Assembly — The fire rated fluted steel unit/concrete floor assembly shall be constructed of the materials and in a manner described in the individual D700 or D900 Floor-Ceiling Design in the UL Fire Resistance Directory and shall include the following construction features:
   A. Steel Floor and Form Units* — Max 3 in. (76 mm) deep galv steel fluted floor units.
   B. Concrete — Min 2-1/2 in. (64 mm) thick reinforced concrete as measured from top plane of the floor units.
   C. Spray-Applied Fire Resistive Materials* — (Optional)—(Not Shown)—Prior to the installation of the forming material and fill, void or cavity material (Items 3A, 3B) the steel floor units may be sprayed with a min 5/16 in. (8 mm) to max 1-3/4 in. (44 mm) thickness of fire resistive material.
   GCP APPLIED TECHNOLOGIES INC — Type MK-6-HY
   ISOLATEK INTERNATIONAL — Type 300

1A. Roof Assembly — (Not Shown) — As an alternate to the floor assembly, a fire rated fluted steel deck roof assembly may be used. The roof assembly shall be constructed of the materials and in the manner described in the individual P900 Series Roof-Ceiling Design in the UL Fire Resistance Directory. The hourly rating of the roof assembly shall be equal to or greater than the hourly rating of the wall assembly. The roof assembly shall include the following construction features:
   A. Steel Roof Deck — Max 3 in. (76 mm) deep galv steel fluted roof deck.
   B. Roof Insulation — Min 2-1/4 in. (57 mm) thick poured insulating concrete, as measured from the top plane of the floor units.

2. Wall Assembly — Min 6 in. (152 mm) thick steel-reinforced lightweight or normal weight (100-150 pcf or 1600-2400 kg/m3) structural concrete. Wall may also be constructed of any UL Classified **Concrete Blocks***.
   See **Concrete Blocks** (CAZT) category in the Fire Resistance Directory for names of manufacturers.

3. Joint System — Max separation between bottom of floor or roof and top of wall at time of installation of joint system is 1 in (25 mm) . The joint system is designed to accommodate a max 12.5 percent compression or extension from its installed width. The joint system shall consist of the following:
   A. Forming Material — Nom 4 pcf (64 kg/m3) mineral wool batt insulation compressed and firmly packed to completely fill the flutes and the gap between the top of the wall and bottom of the floor or roof as a permanent form. Batt insulation cut to the shape of the fluted steel deck, approx 33 percent larger than the flutes. Pieces compressed and installed vertically into the flutes above the top of the wall. Additional pieces of batt insulation, min 6 in. wide, installed edge-first into joint opening between bottom of fluted steel deck and top of wall, parallel with joint direction, such that batt sections are compressed min 33 percent in thickness. Compressed batt sections are flush with both surfaces of wall. Adjoining lengths of batt to be tightly butted with butted seams spaced min 48 in. (1.22 m) apart along the length of the joint.
   ROCK WOOL MANUFACTURING CO — Delta Board

   A1. Forming Material*—Plugs — (Optional-Not Shown) Performed mineral wool plugs, formed to the shape of the fluted floor units, friction fit to completely fill the flutes above the ceiling runner. The plugs shall be flush with both wall surfaces. Additional forming material, described in Item 3A, to be used in conjunction with the plugs to fill the gap between the top of the wall and the bottom of the steel floor units.
   HILTI CONSTRUCTION CHEMICALS, DIV OF HILTI INC — CP777 Speed Plugs

   B. Fill, Void or Cavity Material* — Min 1/8 in. (3.2 mm) wet thickness (min 1/16 in. or 1.6mm dry thickness) of fill material sprayed or troweled on each side of the wall to completely cover mineral wool forming material and to overlap a min of 1/2 in. (13 mm) onto wall and steel deck on both sides of wall. When spray-applied fire resistive material* is applied to the steel deck, the fill material is to overlap the wall a min of 1/2 in. (14 mm) and to overlap the spray-applied fire resistive material a min of 2 in. (51 mm) on both sides of wall. When through-penetrants (Item 4) are installed within flute, the fill material shall overlap a min 1/2 in. (13 mm) onto the periphery of each penetrant, on both sides of wall.
   HILTI CONSTRUCTION CHEMICALS, DIV OF HILTI INC — CP672 Firestop Spray or CFS-SP WB Firestop Joint Spray

4. Through-Penetrants — Max of two penetrants may be installed parallel with and within the flutes of the steel floor or roof deck. The annular space between penetrants and steel deck or spray-applied fire resistive material on steel deck shall be min 0 in. (point contact) and the annular space between penetrants within the flute shall be min 2 in. (51 mm). Penetrants to be rigidly supported on both sides of the floor or wall assembly. The following types and sizes of penetrants may be used:
   A. Polyvinyl Chloride (PVC) Pipe — Nom 1-1/2 in. (38 mm) diam (or smaller) Schedule 40 solid core PVC pipe for use in closed (process or supply) piping systems.
   B. Rigid Nonmetallic Conduit+ — Nom 1-1/2 in. (38 mm) diam (or smaller) Schedule 40 PVC conduit installed in accordance with the National Electrical Code (NFPA 70).
   C. Steel Conduit or Tubing — Nom 1/2 in. (13 mm) diam rigid steel conduit or steel electrical metallic tubing (EMT) installed in accordance with the National Electrical Code (NFPA No. 70).

When Through-Penetrant(s) installed in flute of steel deck, the hourly rating of the joint system is 1 hr.

When Through-Penetrant(s) installed in flute of steel deck, L Ratings do not apply.

* Indicates products shall bear the UL Certification Mark for jurisdictions employing the UL Certification.

Last Updated on 2010-06-04

ASHRAE 90.1-2019

THE PROJECT HAS BEEN DESIGNED TO THE ASHRAE 90.1-2019 STANDARDS FOR THE ENERGY EFFICIENCY BUILDING ENVELOPE REQUIREMENTS:
- CLIMATE ZONE: 4A
- SPACE CONDITIONING CATEGORY: NON-RESIDENTIAL CONDITIONED SPACE (NO SEMI-HEATED SPACES)
- COMPLIANCE PATH: PRESCRIPTIVE
- ROOFS (INSUL. ABOVE DECK): R-30 (CONTINUOUS INSULATION)
- WALLS, ABOVE GRADE (MASS*): R-9.5 (CONTINUOUS INSULATION)
- WALLS, BELOW GRADE: NONE
- FLOORS: NONE
- SLAB-ON-GRADE FLR. (UNHEATED): R-15 FOR 24"
- OPAQUE DOORS (HOLLOW METAL SWINGING): U-0.370
- VERTICAL FENESTRATION 0-40% OF WALL (FIXED):
  0.36 (ASSEMBLY MAX. U)
  0.36 (ASSEMBLY MAX. SHGC)
  1.10 (ASSEMBLY MIN. VT/SHGC)
- VERTICAL FENESTRATION 0-40% OF WALL (ENTRANCE DOOR):
  0.63 (ASSEMBLY MAX. U)
  0.33 (ASSEMBLY MAX. SHGC)
  1.10 (ASSEMBLY MIN. VT/SHGC)

CODE ANALYSIS SUMMARY

PROJECT INFORMATION:
CAMP CLARK TRAINING SITE — **FITNESS CENTER - STORM SHELTER**
18159 SOUTH K HIGHWAY — (NEW CONSTRUCTION PROJECT)
NEVADA, MISSOURI 64772
VERNON COUNTY
MONG PROJECT NUMBER: T1930-01
GLMV PROJECT NUMBER: 00948.19001

JURISDICTION: MISSOURI OFFICE OF ADMINISTRATION - FACILITIES MANAGEMENT, DESIGN & CONSTRUCTION
MISSOURI NATIONAL GUARD

FIRE DEPARTMENT: NEVADA FIRE DEPARTMENT

BUILDING INFORMATION - INTERNATIONAL BUILDING CODE (IBC)
- MAIN OCCUPANCY TYPE (303.4): **A-3 (ASSEMBLY)**
- ADDITIONAL (MIXED) OCCUPANCIES (CHAPTER 3): **N/A**
- CONSTRUCTION TYPE (TABLE 601): **II-B**
  (NON-COMBUSTIBLE / NO FIRE-RESISTIVE REQUIREMENTS)
- BASIC ALLOWABLE AREA (TABLE 506.2): 9,500 S.F.
  W/ AUTOMATIC SPRINKLER SYSTEM (1-STORY): **38,000 S.F.**
- BASIC ALLOWABLE HEIGHT (TABLE 504.3 & 504.4): **3-STORIES / 75'-0"**
- AREA MODIFICATIONS:
  FRONTAGE INCREASE (EQ. 5-5) — If = [260/260-0.25] 30/30
  If = 0.75
  TOTAL AREA INCREASE (EQ. 5-1) — Aa = [38,000 S.F.(9,500 S.F. x 0.75)]
  Aa = 45,125 S.F.
  MAXIMUM ALLOWABLE AREA: **45,125 S.F. / FLR.**
- ACTUAL (GROSS) BUILDING AREA: **3,920 S.F.**
- ACTUAL HEIGHT: **1-STORY / 16' - 8"**

EGRESS
- REQUIRED EXITS PER STORY (TABLE 1006.3.1): **2**
- EXITS PROVIDED IN DESIGN: **2**
- MAX. EXIT ACCESS TRAVEL DISTANCE (TABLE 1017.2): **250 FEET** (A-3 OCCUPANCY)
- DEAD END CORRIDOR LENGTH (SECTION 1020.4): **NOT TO EXCEED 20 FEET**

BUILDING ELEMENTS FIRE-RESISTANCE RATING REQUIREMENTS (TABLE 601)

PRIMARY STRUCTURAL FRAME:	0-HOURS	ROOF CONSTRUCTION:	0-HOURS
INTERIOR BEARING WALLS:	0-HOURS	NON-BEARING WALLS & PARTITIONS	
EXTERIOR BEARING WALLS:	0-HOURS	EXTERIOR:	0-HOURS
FLOOR CONSTRUCTION:	0-HOURS	INTERIOR:	0-HOURS

BUILDING OCCUPANCY LOAD (TABLE 1004.1.2)

ROOM:	OCC. PER	S.F. AREA	OCC. PER RM.
FREE WEIGHTS AREA	1/50 S.F.	925 S.F.	19 OCCUPANTS
MACHINE AREA	1/50 S.F.	1,279 S.F.	26 OCCUPANTS
MEN'S LOCKER ROOM	1/50 S.F.	349 S.F.	7 OCCUPANTS
WOMEN'S LOCKER ROOM	1/50 S.F.	349 S.F.	7 OCCUPANTS
JANITOR'S CLOSET	1/300 S.F.	42 S.F.	1 OCCUPANT
STORAGE	1/300 S.F.	235 S.F.	3 OCCUPANTS
MECHANICAL/ELECTRIC	1/300 S.F.	189 S.F.	1 OCCUPANTS
TOTAL:			**64 OCCUPANTS**

BUILDING SEPARATIONS: (SEE NFPA CODE SUMMARY)

PLUMBING FIXTURES (TABLE 2902.1)

FIXTURE COUNTS	TOTAL PER/OCC.	TOTAL REQ.	PROVIDED
WATER CLOSETS:	1/125 MALE	1	3
	1/65 FEMALE	1	3
LAVATORIES:	1/200 OCC.	1	4
SHOWERS:	-	-	-
OTHER - SERVICE SINK:	1 REQUIRED	1	1
DRINKING FOUNTAINS:	1/500 OCC.	1	4

NFPA 101 : LIFE SAFETY CODE
OCCUPANCY (SECTION 6.1.2.1): **ASSEMBLY**
SEPARATION OF OCCUPANCIES (SECTION 12.3.2): ASSEMBLY & MECHANICAL: **1-HOUR**
FIRE ALARM SYSTEM: PER NFPA 70, 72 & UFC 3-600-01
FIRE PROTECTION SYSTEMS: AUTO. SPRINKLER SYSTEM PER NFPA 13
PORTABLE EXTINGUISHING EQUIP. PER NFPA

CODES OF RECORD:
INTERNATIONAL BUILDING CODE (IBC) EDITION: 2015
INTERNATIONAL PLUMBING CODE (IPC) EDITION: 2015
INTERNATIONAL MECHANICAL CODE (IMC) EDITION: 2015
NATIONAL ELECTRICAL CODE (NEC) EDITION: 2015
NATIONAL FIRE PROTECTION AGENCY (NFPA 101) EDITION: 2015
AMERICANS WITH DISABILITIES ACT (ADA) EDITION: 2010
ARCHITECTURAL BARRIERS ACT (ABA) (EXEMPT)
ASHRAE STANDARD 90.1** EDITION: 2019
SHEET METAL AND AIR-CONDITIONING CONTRACTOR'S NATIONAL ASSOCIATION (SMACNA)
AMERICAN SOCIETY OF MECHANICAL ENGINEERS (ASME)
AMERICAN NATIONAL STANDARDS INSTITUTE (ANSI)
AMERICAN CONCRETE INSTITUTE (ACI)

LAND USE: PROJECT IS LOCATED ON LAND OWNED BY THE NATIONAL GUARD & IS OUTSIDE THE JURISDICTION OF THE CITY OF NEVADA & VERNON COUNTY.

ACCESSIBLE ROUTES: ALL SPACES ARE ACCESSIBLE. ADJACENT PARKING LOTS HAVE AN ACCESSIBLE ROUTE TO THE BUILDING.

ACTIVE FIRE PROTECTION SYSTEMS:
ARMY NATIONAL GUARD, DG 415-5 (GENERAL FACILITIES INFORMATION DESIGN GUIDE):
- (SECTION 1-3.15) - INCORPORATE EFFICEINT AND COST-EFFECTIVE FIRE PROTECTION AND DETECTION SYSTEMS IN ALL ARNG FACILITY DESIGNS.
- (FIRE PROTECTION SYSTEMS - UFGS 21 13 00) - REGARDLESS OF THE CONSTRUCTION TYPE, ANY FACILITIES MEETING THE FOLLOWING CRITERIA SHOULD BE PROVIDED WITH AN APPROPRIATE FIRE PROTECTION SYSTEM:
  OPERATIONAL IMPAIRMENT WOULD REDUCE THE OPERATIONAL READINESS AND RESPONSIVENESS OF THE STRATEGIC OR TACTICAL DEFENSIVE AND OFFENSIVE CAPABILITY.

**AMERICAN SOCIETY OF HEATING REFRIGERATING AND AIR-CONDITIONING ENGINEERS (ASHRAE) STANDARD 90.1 FOR ENERGY EFFICIENT DESIGN OF NEW BUILDINGS EXCEPT LOW-RISE RESIDENTIAL BUILDINGS.

STORM SHELTER SUMMARY

THE PROJECT HAS BEEN DESIGNED TO THE ICC 500-2014, ICC/NSSA STANDARD FOR THE DESIGN AND CONSTRUCTION OF STORM SHELTER REQUIREMENTS.

BUILDING INFORMATION
- BUILDING NUMBER: 358
- TYPE: COMMUNITY SHELTER FOR TORNADO PROTECTION
- RISK CATEGORY: IV (ESSENTIAL FACILITY)
- WIND SPEED: 250 MPH
- WIND EXPOSURE CATEGORY: C
- INTERNAL PRESSURE COEFFICIENT: +/-0.55
- TOPOGRAPHIC FACTOR: 1.0
- DIRECTIONALITY FACTOR: 1.0
- VENTING AREA: (SEE MECHANICAL DRAWINGS)

- OCCUPANT LOAD (AS A STORM SHELTER)
  GROSS AREA: 3,553 S.F. (INSIDE FACE STUDS/4" CMU)
  OCCUPANT DENSITY (TABLE 501.1.1): 5 S.F/OCCUPANT
  USABLE FLOOR AREA REDUCTION (SECTION 501.1.2): 35% (3,553 S.F. x 35% = 1,244 S.F.)
  USABLE FLOOR AREA: 2,309 S.F.
  OCCUPANT LOAD: 462 OCCUPANTS
  WHEELCHAIR SPACES (SECTION 501.1.3): 3 OCCUPANTS

- SANITATION FIXTURE CALCULATION (TABLE 702.2)
  STORM SHELTER TYPE: COMMUNITY WITH OCCUPANT LOAD GREATER THAN 50
  TOILET FACILITIES: 2 (2 MIN. FOR FIRST 500 OCCUPANTS)
  HAND WASHING FACILITIES: 1 (1 PER 1,000 OCCUPANTS)

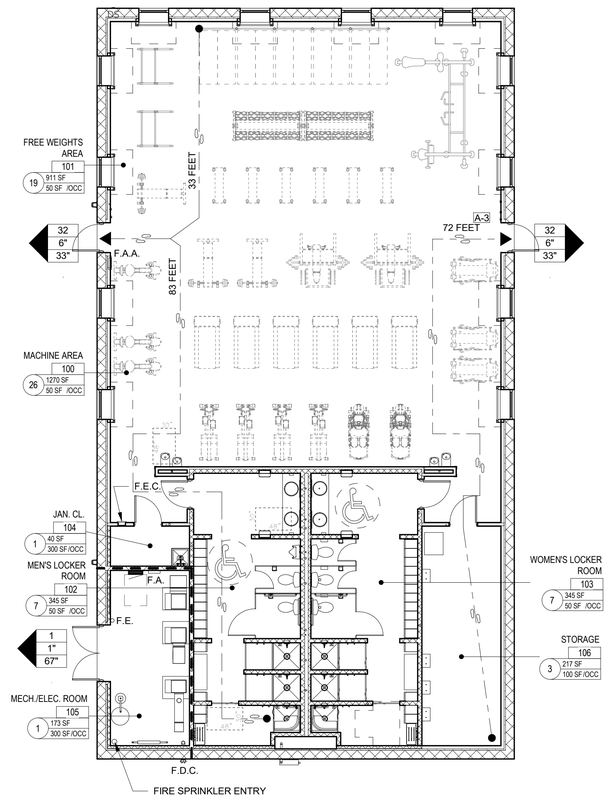

1 LIFE SAFETY PLAN

0' 4' 8' 12'
1/8" = 1'-0"
NORTH
PLAN TRUE

CODE PLAN LEGEND

- 5 — OCCUPANT LOAD EXITING
- 1.0" — REQUIRED WIDTH
- 34" — PROVIDED WIDTH
- DIRECTION OF EGRESS
- S-1 — OCCUPANCY TYPE
- 1-HOUR SEPARATION
- X FEET — TRAVEL DISTANCE AND DIRECTION
- ROOM — ROOM NAME
- 101 — ROOM NUMBER
- ROOM AREA
- 4 / 400 SF / 100 /OCC — AREA PER OCCUPANT
- OCCUPANCY LOAD
- F.E.C. / F.E. / WALL — FIRE EXTINGUISHER W/ BRACKET (F.E.) OR CABINET (F.E.C.); TRAVEL DISTANCE NOT TO EXCEED 75 FEET
- F.A.(A.) — FIRE ALARM ANNUNCIATOR PANEL (F.A.A.) OR FIRE ALARM PANEL (F.A.) (RE: ELECT.)
- F.D.C. — FIRE DEPARTMENT CONNECTION (RE: PLMG.)

ADA LEGEND

- T-SHAPED TURNING SPACE (ANSI A117.1-2009)
- 60" DIA. CIRCULAR TURNING SPACE (ANSI A117.1-2009)
- FORWARD APPROACH CLEARANCE SPACE (ANSI A117.1-2009)

LIFE SAFETY NOTES

1. THE OCCUPANT LOADS ON THE LIFE SAFETY PLAN WERE DETERMINED BY UTILIZING OCCUPANT LOAD FACTORS FROM THE REFERENCED EDITION OF THE INTERNATIONAL BUILDING CODE (IBC) NOTED IN THE CODE SUMMARY.
2. SLIGHT VARIANCES BETWEEN THE CALCULATED NFPA AND IBC OCCUPANT LOADS CAN BE FOUND IN THE CODE SUMMARY. ANY SIGNIFICANT DIFFERENCES BETWEEN THE TWO BUILDING CODE DOCUMENTS HAVE BEEN OR WILL BE AS NOTED ON THE PLAN OR WITHIN THESE NOTES.

STORM SHELTER NOTES

1. THE WIND DESIGN CONFORMS TO THE REQUIREMENTS OF THE ICC 500-2014 BUILDING CODE.
2. THE SHELTER HAS NOT BEEN CONSTRUCTED WITHIN AN AREA SUSCEPTIBLE TO FLOODING ACCORDING TO CHAPTER 4 OF THE ICC 500-2014 BUILDING CODE.
3. THE LOCATION OF THE STORM SHELTER WITHIN THE CAMP CLARK FACILITY CAN BE FOUND PER THE VICINITY MAP ON THE COVER SHEET.
4. CONTRACTOR SHALL PROVIDE DOCUMENTATION SHOWING THAT COMPONENTS OF THE SHELTER ENVELOPE WILL MEET THE PRESSURE AND MISSLE IMPACT TEST REQUIREMENTS IDENTIFIED IN CHAPTERS 3 AND 8 OF THE ICC 500-2014 BUILDING CODE.
5. SEE STRUCTURAL DRAWINGS FOR FOUNDATION CAPACITY REQUIREMENTS.
6. A FIRST AID KIT SHALL BE PROVIDED IN THE STORM SHELTER (BY OTHERS).

STATE OF MISSOURI
MIKE PARSON,
GOVERNOR

STATE OF MISSOURI
RYAN P. KREMER
NUMBER A-2016015514
07/02/2020
ARCHITECT

BID DOCUMENTS

GLMV Architecture
9229 Ward Parkway, Kansas City, MO 64114
Tel: (816) 444-4200
www.glmv.com
GLMV Architecture, Inc
MO State Certificate of Authority #F00364807
Corporate State of MO Licensee #000305

OFFICE OF ADJUTANT GENERAL
DIVISION OF FACILITIES MANAGEMENT, DESIGN AND CONSTRUCTION
DEPARTMENT OF PUBLIC SAFETY
Missouri Army National Guard

Camp Clark Training Site

18159 South K Highway
Nevada, Missouri 64772

FITNESS CENTER - STORM SHELTER

PROJECT # T1930-01
SITE # 6275
ASSET # 8136274078

REVISION:
DATE:
REVISION:
DATE:
REVISION:
DATE:
ISSUE DATE: 07/02/2020

CAD DWG FILE:

DRAWN BY: JSP
CHECKED BY: RPK
DESIGNED BY: GLMV

SHEET TITLE:
LIFE SAFETY PLAN & CODE ANALYSIS

SHEET NUMBER:
G-002

BID DOCUMENTS 07/02/2020

TOPOGRAPHIC SURVEY

CAMP CLARK FITNESS CENTER

VERNON COUNTY, MISSOURI

A TOPOGRAPHIC SURVEY OF A PORTION OF CAMP CLARK, LOCATED IN NEVADA, VERNON COUNTY, MISSOURI

GRAPHIC SCALE

30 0 15 30 60 120

(IN FEET)
1 inch = 30 ft.

LEGEND:

- PROJECT/TEMPORARY BENCHMARK
- WATER VALVE
- FIRE HYDRANT
- SANITARY SEWER MANHOLE
- ELECTRIC SERVICE METER
- GAS SERVICE METER
- UNDERGROUND TELEPHONE PEDESTAL
- OVERHEAD ELECTRIC LINE
- UNDERGROUND ELECTRIC LINE
- UNDERGROUND GAS LINE
- UNDERGROUND COMMUNICATION LINE
- UNDERGROUND WATER LINE
- UNDERGROUND SANITARY SEWER LINE
- UNDERGROUND STORM SEWER LINE

GENERAL NOTES:

1. VERTICAL DATUM: NAVD 88; OBSERVED M 168, PID HE0090, ELEVATION 851.93. CONTOURS AT 1' INTERVALS.

2. HORIZONTAL DATUM: NAD 83; STATE PLANE COORDINATE MISSOURI WEST; OBSERVED NEVADA AIRPORT (HE0915) AND NEVAPORT (HE 1201). COMBINED GRID FACTOR: 0.99990786.

3. SURVEYOR HAS MADE NO INVESTIGATION OR INDEPENDENT SEARCH FOR EASEMENTS OF RECORD, ENCUMBRANCES, RESTRICTIVE COVENANTS OR ANY OTHER FACTS THAT AN ACCURATE AND CURRENT TITLE SEARCH MAY DISCLOSE. EXCEPT AS SHOWN ON THE SURVEY, THE CLIENT HAS NOT DELIVERED/FURNISHED ANY ADDITIONAL EASEMENTS.

4. THERE IS NO APPARENT OBSERVABLE EVIDENCE OF A CEMETERY OR BURIAL GROUND LOCATED ON THE LIMITS OF THE TOPOGRAPHIC SURVEY.

UTILITY STATEMENT:

1. THE UTILITIES SHOWN HAVE BEEN LOCATED FROM OBSERVED FIELD SURVEY INFORMATION, AVAILABLE MAPS AND OBSERVED FIELD MARKS BY AREA UTILITY COMPANIES AS COORDINATED BY MO ONE-CALL TICKET NO. 192841764. THE SURVEYOR MAKES NO GUARANTEE THAT THE UNDERGROUND UTILITIES, IF SHOWN, COMPRISE ALL SUCH UTILITIES IN THE AREA, EITHER IN SERVICE OR ABANDONED. THE SURVEYOR FURTHER DOES NOT WARRANTY THAT THE UNDERGROUND UTILITIES, IF SHOWN, ARE IN THE EXACT LOCATION INDICATED ALTHOUGH HE DOES CERTIFY THAT THEY ARE LOCATED AS ACCURATELY AS POSSIBLE FROM INFORMATION AVAILABLE. THE SURVEYOR HAS NOT PHYSICALLY LOCATED THE UNDERGROUND UTILITIES.

2. AREA UTILITY COMPANY	STATUS
A. ATT DISTRIBUTION	CLEAR/NO CONFLICT ATT_CLEAR
B. LIBERTY UTILITIES	MARKED
C. EVERGY	MARKED

FLOOD HAZARD NOTE:

1. THE SUBJECT TRACT, BY GRAPHIC PLOTTING ONLY, LIES IN UNSHADED ZONE X, AREAS DETERMINED TO BE OUTSIDE THE 500 YEAR FLOOD PLAIN. ACCORDING TO THE FEDERAL EMERGENCY MANAGEMENT AGENCY'S, NATIONAL FLOOD INSURANCE PROGRAM'S, FLOOD INSURANCE RATE MAP, COMMUNITY-PANEL NUMBER 290841 0200 A, BEARING AN EFFECTIVE DATE OF DECEMBER 15, 1983, CONVERTED BY LETTER EFFECTIVE JULY 01, 1987.

CERTIFICATION:

I HEREBY CERTIFY THAT THIS TOPOGRAPHIC SURVEY AND MAP WAS PREPARED BY ME OR UNDER MY DIRECT SUPERVISION AND THAT I AM A DULY REGISTERED LAND SURVEYOR UNDER THE LAWS OF THE STATE OF MISSOURI.

10/17/19
DATE

MICHAEL L. TAYLOR MO. P.L.S. 2000161238
(AS ACTING AGENT FOR L.C. 331)

TOPOGRAPHIC SURVEY

FOR: GLMV ARCHITECTURE
CAMP CLARK FITNESS CENTER
VERNON COUNTY, MISSOURI

Whitehead Consultants, Inc.
Engineers, Surveyors

114 NORTH MAIN STREET
P.O. BOX 461
CLINTON, MISSOURI 64735
Phone: (660) 885-8311
Fax: (660) 885-8447

312 WEST MAIN STREET
P.O. BOX 790
WARSAW, MISSOURI 65355
Phone: (660) 438-9473
Fax: (660) 438-9574

JOB NO.
19-327

SCALE
1"=30'

SHEET NO.
1 OF 1

STATE OF MISSOURI
MIKE PARSON, GOVERNOR

OFFICE OF ADJUTANT GENERAL
DIVISION OF FACILITIES MANAGEMENT, DESIGN AND CONSTRUCTION

DEPARTMENT OF PUBLIC SAFETY

Missouri Army National Guard

Camp Clark Training Site

18159 South K Highway
Nevada, Missouri 64772

FITNESS CENTER - STORM SHELTER

PROJECT # T1930-01
SITE # 6275
ASSET # 8136274078

REVISION:
DATE:
REVISION:
DATE:
REVISION:
DATE:
ISSUE DATE: 07/02/2020

CAD DWG FILE:
T1930-01_6275_8136274078_C-101
DRAWN BY: JEH
CHECKED BY: MLT
DESIGNED BY:

SHEET TITLE:
TOPOGRAPHIC SURVEY

SHEET NUMBER:
C-101

BID DOCUMENTS

07/02/2020

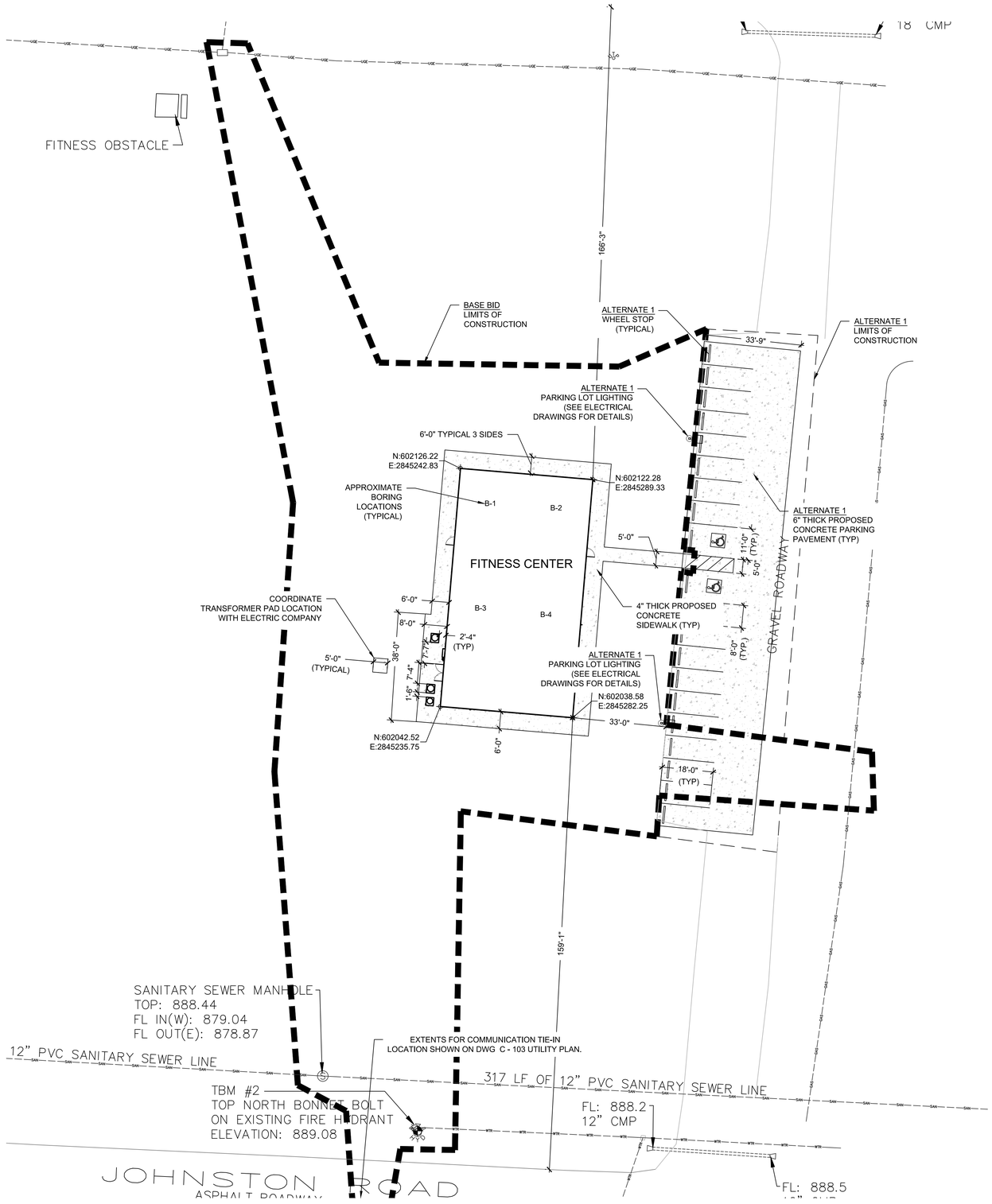

1 SITE PLAN

1" = 20'-0"

SITE PLAN NOTES

1. PRIOR TO STARTING CONSTRUCTION THE CONTRACTOR SHALL BE RESPONSIBLE TO MAKE SURE THAT ALL REQUIRED PERMITS AND APPROVALS HAVE BEEN OBTAINED. NO CONSTRUCTION OR FABRICATION SHALL BEGIN UNTIL THE CONTRACTOR HAS RECEIVED AND THOROUGHLY REVIEWED ALL PLANS AND OTHER DOCUMENTS APPROVED BY ALL OF THE PERMITTING AUTHORITIES.
2. ALL WORK SHALL BE PERFORMED IN ACCORDANCE WITH THESE PLANS, SPECIFICATIONS AND THE REQUIREMENTS AND STANDARDS OF THE LOCAL GOVERNING AUTHORITY.
3. CONTRACTOR SHALL CONTACT DIG SAFE PRIOR TO ANY EXCAVATION OR DIGGING.
4. ALL EXISTING CONDITIONS, DIMENSIONS, AND GRADES SHOWN ON THE PLANS SHALL BE FIELD VERIFIED BY THE CONTRACTOR PRIOR TO CONSTRUCTION. CONTRACTOR SHALL NOTIFY THE CONSTRUCTION MANAGER IF ANY DISCREPANCIES EXIST, PRIOR TO PROCEEDING WITH CONSTRUCTION, FOR NECESSARY PLAN OR GRADE CHANGES. NO EXTRA COMPENSATION SHALL BE PAID TO THE CONTRACTOR FOR WORK HAVING TO BE REDONE DUE TO DIMENSIONS OR GRADES SHOWN INCORRECTLY ON THESE PLANS IF SUCH NOTIFICATION HAS NOT BEEN GIVEN.
5. CONTRACTOR SHALL REPAIR ALL DISTURBED LANDSCAPING.

LEGEND

- BASE BID - LIMITS OF CONSTRUCTION
- ALTERNATE 1 - LIMITS OF CONSTRUCTION
- PROP. CONCRETE
- PROP. ROOF DRAIN LINE
- UGE — PROP. UNDERGROUND ELECTRIC LINE
- G — PROP. GAS LINE
- W — PROP. WATER LINE
- SS — PROP. SANITARY SEWER LINE
- COMM — PROP. COMMUNICATION LINE
- UGE — EX. UNDERGROUND ELECTRIC LINE
- GAS — EX. GAS LINE
- WTR — EX. WATER LINE
- SAN — EX. SANITARY SEWER LINE
- EX. STORM SEWER
- EX. EDGE OF ROAD
- PROJECT/TEMPORARY BENCHMARK
- EX. WATER VALVE
- EX. FIRE HYDRANT
- EX. SANITARY SEWER MANHOLE
- EX. ELECTRIC SERVICE METER
- EX. GAS SERVICE METER
- EX. TELEPHONE PEDESTAL

0 20' 40'
GRAPHIC SCALE 20'

N
PLAN NORTH

STATE OF MISSOURI
MIKE PARSON,
GOVERNOR

BID DOCUMENTS

GLMVArchitecture
9229 Ward Parkway, Kansas City, MO 64114
Tel: (816) 444-4200
www.glmv.com
GLMV Architecture, Inc
MO State Certificate of Authority #F00364807

STATE OF MISSOURI
ANGELA MORGAN NUMBER
PE-2018031541
PROFESSIONAL ENGINEER

OFFICE OF ADJUTANT GENERAL
DIVISION OF FACILITIES MANAGEMENT, DESIGN AND CONSTRUCTION
DEPARTMENT OF PUBLIC SAFETY
Missouri Army National Guard

Camp Clark Training Site

18159 South K Highway
Nevada, Missouri 64772
PROJECT NO. T1930-01

FITNESS CENTER -
STORM SHELTER

PROJECT # T1930-01
SITE # 6275
ASSET # 8136274078

REVISION:
DATE:
REVISION:
DATE:
REVISION:
DATE:
ISSUE DATE: 07/02/2020

CAD DWG FILE:

DRAWN BY: JIH
CHECKED BY: ALM
DESIGNED BY: GDW

SHEET TITLE:
SITE PLAN

SHEET NUMBER:
C-102

4 OF 33 SHEETS

07/02/2020

BID DOCUMENTS

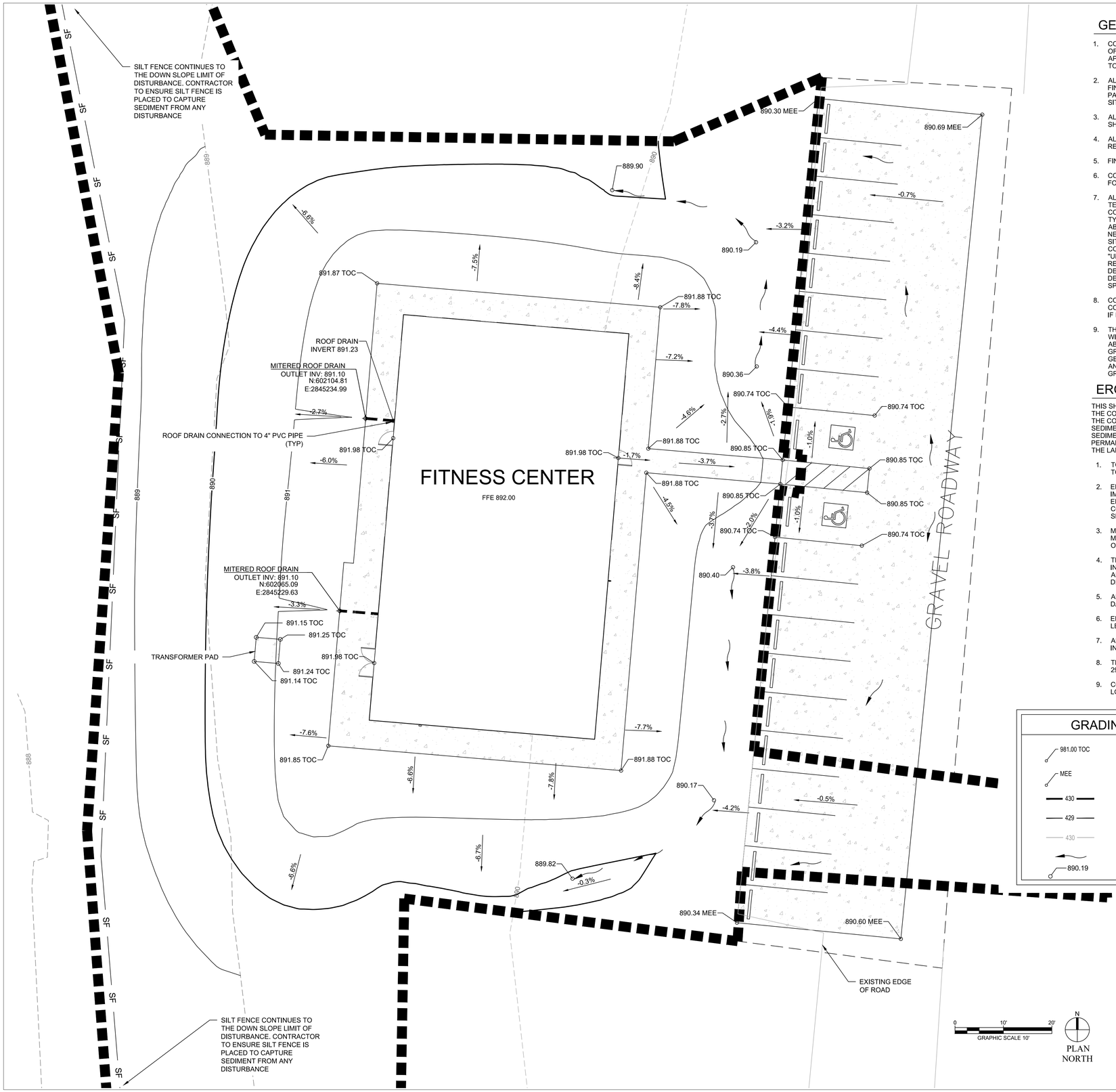

GENERAL GRADING NOTES

1. CONTRACTOR SHALL OBTAIN SOILS SUITABLE AS STRUCTURAL FILL FROM OFF-SITE SOURCES. ALL BORROW MATERIALS MUST BE TESTED AND APPROVED BY THE GEOTECHNICAL ENGINEER PRIOR TO IMPORTING SOILS TO THE PROJECT SITE.
2. ALL PROPOSED CONTOUR LINES AND SPOT ELEVATIONS SHOWN ARE FINISH GROUND ELEVATIONS. CONTRACTOR SHALL ACCOUNT FOR PAVEMENT DEPTHS, BUILDING PADS, TOPSOIL, ETC WHEN GRADING THE SITE.
3. ALL DISTURBED AREAS THAT ARE NOT TO BE PAVED (GREEN SPACES) SHALL BE FINISH GRADED WITH A MINIMUM OF SIX INCHES OF TOPSOIL.
4. ALL EXCAVATIONS AND EMBANKMENTS SHALL COMPLY WITH THE RECOMMENDATIONS PROVIDED BY THE GEOTECHNICAL ENGINEER.
5. FINISHED GRADES SHALL NOT BE STEEPER THAN 3:1.
6. CONTRACTOR SHALL GRADE AWAY FROM ALL BUILDINGS AT 5% SLOPE FOR A MINIMUM FIVE FEET.
7. ALL SITE WORK FOR THIS PROJECT IS CONSIDERED "UNCLASSIFIED". THE TERM "UNCLASSIFIED" EXCAVATION SHALL BE DEFINED AS MEANING THE CONTRACTOR BEARS THE ENTIRE RISK OF THE SOIL QUANTITIES AND/OR TYPE (E.G. ROOK, CLAY, PEAT, SILT,SHALE, ETC.) ENCOUNTERED EITHER ABOVE OR BELOW PROPOSED SUBGRADES. IN THE EVENT IT BECOMES NECESSARY FOR UNSUITABLE SOIL TO BE HANDLED, REMOVED FROM THE SITE, OR FOR SUITABLE MATERIAL TO BE IMPORTED TO THE SITE, THE CONTRACTOR SHALL BEAR THE ENTIRE COST OF SUCH ADDITIONAL WORK. "UNSUITABLE" SOIL ALSO INCLUDES SATURATED SOILS THAT MAY NEED REPLACING AND/OR TREATING IN ORDER TO MEET SCHEDULE DATES. THIS DEFINITION OF "UNCLASSIFIED" SUPERCEDES ANY CONTRARY DEFINITIONS OR STATEMENTS WHICH MAY BE CONTAINED IN SPECIFICATIONS, PLANS, OR OTHER DOCUMENTS.
8. CONTRACTOR SHALL FIELD VERIFY ALL EXISTING ELEVATIONS OF CONNECTION POINTS AS SHOWN ON GRADING PLANS. NOTIFY ENGINEER IF DISCREPANCY EXISTS FOR DIRECTION.
9. THIS IS DESIGN GRADING. ALL GRADES SHALL BE CONTOURED SMOOTHLY WITH GENTLE ROUNDING/SHAPING OF ALL AFFECTED LAND SURFACES. ABRUPT TRANSITIONS AT THE TOP OF SLOPES WHERE PROPOSED GRADES MEET EXISTING ARE NOT ACCEPTABLE. SURVEY STAKES ARE FOR GENERAL GRADING PURPOSES ONLY. NOT ALL SLOPES ARE CONSTANT AND THEREFORE THE GRADING PLANS SHALL BE REFERRED TO FOR FINAL GRADE SHAPING.

EROSION AND SEDIMENT CONTROL NOTES

THIS SHEET OUTLINES MINIMUM STORMWATER PRACTICES TO BE FOLLOWED BY THE CONTRACTOR DURING ALL PHASES OF CONSTRUCTION OF THE PROJECT. THE CONTRACTOR WILL BE RESPONSIBLE FOR PREVENTION OF SOIL OR SEDIMENT LOSS FROM THE CONSTRUCTION SITE. TEMPORARY EROSION AND SEDIMENT CONTROLS ARE NOT TO BE REMOVED OR TERMINATED UNTIL THE PERMANENT VEGETATION HAS BEEN ESTABLISHED TO THE SPECIFICATIONS OF THE LANDSCAPE PLAN.

1. TOTAL SITE 0.94 ACRES (40,835 S.F.)
   TOTAL DISTURBED AREA: 0.94 ACRES (40,835 S.F.)
2. EROSION CONTROL MEASURES TO BE MAINTAINED AT ALL TIMES. IF FULL IMPLEMENTATION OF THE APPROVED PLAN DOES NOT PROVIDE FOR EFFECTIVE EROSION CONTROL, ADDITIONAL EROSION AND SEDIMENT CONTROL MEASURES SHALL BE IMPLEMENTED TO CONTROL OR TREAT THE SEDIMENT SOURCE.
3. MAINTENANCE OF ALL SOIL EROSION AND SEDIMENTATION CONTROL MEASURES AND PRACTICES, SHALL BE AT ALL TIMES THE RESPONSIBILITY OF THE CONTRACTOR.
4. THE ESCAPE OF SEDIMENT FROM THE SITE SHALL BE PREVENTED BY THE INSTALLATION OF EROSION AND SEDIMENTATION CONTROL MEASURES AND PRACTICES SHALL OCCUR PRIOR TO OR CONCURRENT WITH LAND DISTURBING ACTIVITIES.
5. ANY DISTURBED AREA LEFT EXPOSED FOR A PERIOD GREATER THAN 14 DAYS SHALL BE STABILIZED WITH PERMANENT SEEDING OR SODDING.
6. EROSION AND SEDIMENT CONTROL MEASURES SHALL BE INSPECTED AT LEAST WEEKLY, AFTER EACH RAIN EVENT AND REPAIRED AS NECESSARY.
7. ADDITIONAL EROSION AND SEDIMENT CONTROL MEASURES SHALL BE INSTALLED IF DETERMINED NECESSARY BY ON-SITE INSPECTION.
8. THE PROPERTY APPEARS TO BE OUT SIDE OF ZONE A PER FIRM PANEL 2908410200A DATED DECEMBER 15, 1983.
9. CONTRACTOR TO CALL MISSOURI 811 TO VERIFY EXISTING UTILITY LOCATIONS BEFORE BEGINNING ANY CONSTRUCTION WORK.

GRADING LEGEND

981.00 TOC	SPOT ELEVATION TOP OF CONCRETE
MEE	MATCH EXISTING ELEVATION
430	PROPOSED MAJOR CONTOUR
429	PROPOSED MINOR CONTOUR
430	EXISTING CONTOUR
	FLOWLINE ARROW
890.19	SPOT ELEVATION

LEGEND

	BASE BID - LIMITS OF CONSTRUCTION
	ALTERNATE 1 - LIMITS OF CONSTRUCTION
SF	PROP. SILT FENCE
	PROP. CONCRETE
	PROP. ROOF DRAIN LINE
UGE	PROP. UNDERGROUND ELECTRIC LINE
G	PROP. GAS LINE
W	PROP. WATER LINE
SS	PROP. SANITARY SEWER LINE
COMM	PROP. COMMUNICATION LINE
CW	CONCRETE WASHOUT
UGE	EX. UNDERGROUND ELECTRIC LINE
GAS	EX. GAS LINE
WTR	EX. WATER LINE
SAN	EX. SANITARY SEWER LINE
	EX. STORM SEWER
	EX. EDGE OF ROAD
	PROJECT/TEMPORARY BENCHMARK
	EX. WATER VALVE
	EX. FIRE HYDRANT
	EX. SANITARY SEWER MANHOLE
	EX. ELECTRIC SERVICE METER
	EX. GAS SERVICE METER
	EX. TELEPHONE PEDESTAL

BID QUANTITIES

EXCAVATION (BASE BID) = 108 CUYD
FILL (BASE BID) = 830 CUYD
TOPSOIL STOCKPILE (8 IN DEPTH - BASE BID) = 2485 SQYD
TOPSOIL SPOIL (8 INCH DEPTH - BASE BID) = 1828 SQYD
TOPSOIL HAULOFF (BASE BID) = 657 SQYD
CONCRETE PARKING PAVEMENT (ALTERNATE 1) = 647 SQYD
ROCK FILL (ALTERNATE 1) = 650 SQYD

BID QUANTITY NOTES

1) ROCK FILL QUANTITIES INCLUDE ROCK BELOW, PARKING PAVEMENT, AND TRANSFORMER. FOR ROCK FILL QUANTITY UNDER BUILDING SLAB AND FOOTINGS REFER TO STRUCTURAL DRAWINGS. FOR DEPTH OF ROCK FILL, REFER TO DETAIL 1 ON SHEET C-502.

2) FOR CONCRETE PAVEMENT SECTION, SEE DETAIL 1 ON SHEET C-502.

3) EXCAVATION AND FILL QUANTITIES SHOWN DO NOT INCLUDE COMPACTION OR EXPANSION FACTORS.

STATE OF MISSOURI
MIKE PARSON,
GOVERNOR

BID DOCUMENTS

GLMVArchitecture
9229 Ward Parkway, Kansas City, MO 64114
Tel: (816) 444-4200
www.glmv.com
GLMV Architecture, Inc
MO State Certificate of Authority #F00364807

ANGELA L. MORGAN
LICENSED
21159
KANSAS
PROFESSIONAL ENGINEER

OFFICE OF ADJUTANT GENERAL
DIVISION OF FACILITIES MANAGEMENT, DESIGN AND CONSTRUCTION
DEPARTMENT OF PUBLIC SAFETY
Missouri Army National Guard

Camp Clark Training Site

18159 South K Highway
Nevada, Missouri 64772
PROJECT NO. T1930-01

FITNESS CENTER - STORM SHELTER

PROJECT # T1930-01
SITE # 6275
ASSET # 8136274078

REVISION:
DATE:
REVISION:
DATE:
REVISION:
DATE:
ISSUE DATE: 07/02/2020

CAD DWG FILE:

DRAWN BY: JIH
CHECKED BY: ALM
DESIGNED BY: GDW

SHEET TITLE:

GRADING DRAINAGE AND EC PLAN

SHEET NUMBER:

C-103

BID DOCUMENTS

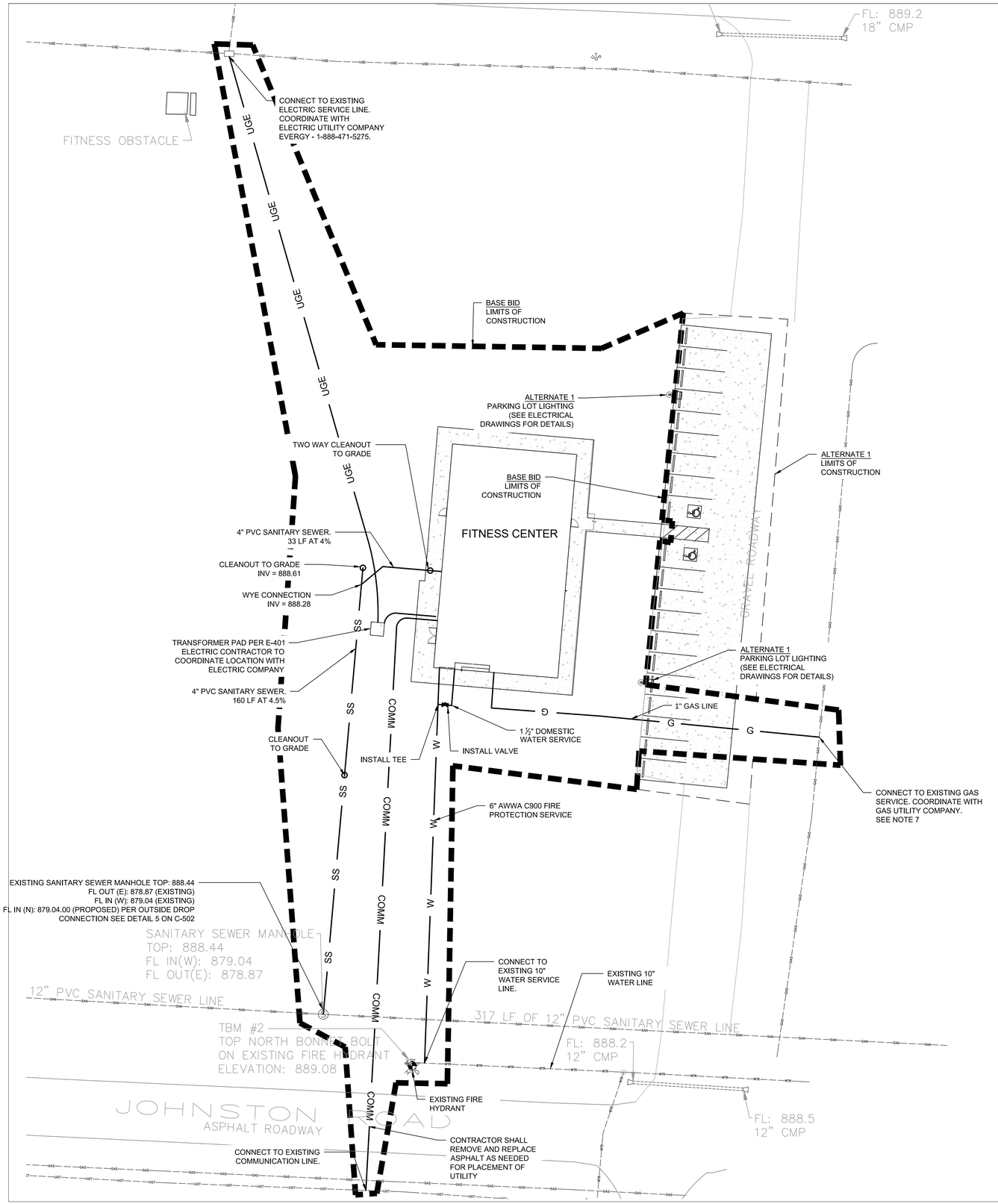

GENERAL UTILITIES NOTES

1. THE INFORMATION SHOWN HEREON IS CONSIDERED ACCURATE, BUT ANY UNDERGROUND FACILITIES, STRUCTURES OR UTILITIES SHOWN MAY VARY FROM THE INFORMATION PROVIDED. THEREFORE, BEFORE STARTING ANY WORK, THE CONTRACTOR SHALL LOCATE AND PROTECT ALL KNOWN EXISTING UNDERGROUND UTILITY LINES DURING THE COURSE OF CONSTRUCTION.
2. CONTRACTOR SHALL PERFORM SITE INVESTIGATION TO VERIFY LOCATION AND DEPTH OF ALL UTILITIES. INVESTIGATION BY MEANS OF VACUUM OR AIR PRESSURE POTHOLING OR OTHER MEANS AS APPROVED BY THE ENGINEER. CONTRACTOR SHALL ACCURATELY RECORD AND STAKE BY SURVEYING THE DEPTH AND LOCATION OF ALL UTILITIES WERE THEY ENTER THE HORIZONTAL AND VERTICAL LIMITS OF ANY PROPOSED PAVEMENT CONSTRUCTION OR ANYWHERE THEY CROSS PROPOSED UTILITY INSTALLATION.
3. EXERCISE EXTREME CARE WHEN USING ANY EQUIPMENT TO PREVENT CONTACT WITH ANY UNDERGROUND ELECTRIC LINES AND UNDERGROUND COMMUNICATION LINES.
4. ALL PIPE THRUST BLOCKS PER DETAIL DTL 7/C-501.
5. ALL NEW PIPING SHALL HAVE A MINIMUM OF 46" OF COVER.
6. ALL FIRE WATER LINES SHOULD BE INSTALLED IN ACCORDANCE WITH LOCAL PRIVATE WATER UTILITY.
7. CONTRACTOR SHALL COORDINATE TIE-IN TO EXISTING GAS MAIN WITH UTILITY COMPANY. CONTRACTOR SHALL INSTALL NEW GAS LINE PER GAS COMPANY REQUIREMENTS.

LEGEND

- BASE BID - LIMITS OF CONSTRUCTION
- ALTERNATE 1 - LIMITS OF CONSTRUCTION
- PROP. CONCRETE
- PROP. ROOF DRAIN LINE
- UGE — PROP. UNDERGROUND ELECTRIC LINE
- G — PROP. GAS LINE
- W — PROP. WATER LINE
- SS — PROP. SANITARY SEWER LINE
- COMM — PROP. COMMUNICATION LINE
- UGE — EX. UNDERGROUND ELECTRIC LINE
- GAS — EX. GAS LINE
- WTR — EX. WATER LINE
- SAN — EX. SANITARY SEWER LINE
- EX. STORM SEWER
- EX. EDGE OF ROAD
- PROJECT/TEMPORARY BENCHMARK
- EX. WATER VALVE
- EX. FIRE HYDRANT
- EX. SANITARY SEWER MANHOLE
- EX. ELECTRIC SERVICE METER
- EX. GAS SERVICE METER
- EX. TELEPHONE PEDESTAL

STATE OF MISSOURI
MIKE PARSON,
GOVERNOR

BID DOCUMENTS

GLMVArchitecture
9229 Ward Parkway, Kansas City, MO 64114
Tel: (816) 444-4200
www.glmv.com
GLMV Architecture, Inc
MO State Certificate of Authority #F00364807

STATE OF MISSOURI
ANGELA MORGAN NUMBER PE-2018031541
PROFESSIONAL ENGINEER

OFFICE OF ADJUTANT GENERAL
DIVISION OF FACILITIES MANAGEMENT, DESIGN AND CONSTRUCTION
DEPARTMENT OF PUBLIC SAFETY
Missouri Army National Guard

Camp Clark Training Site

18159 South K Highway
Nevada, Missouri 64772
PROJECT NO. T1930-01

FITNESS CENTER - STORM SHELTER

PROJECT # T1930-01
SITE # 6275
ASSET # 8136274078

REVISION:
DATE:
REVISION:
DATE:
REVISION:
DATE:
ISSUE DATE: 07/02/2020

CAD DWG FILE:

DRAWN BY: JIH
CHECKED BY: ALM
DESIGNED BY: GDW

SHEET TITLE:

UTILITY PLAN

SHEET NUMBER:

C-104

07/02/2020

BID DOCUMENTS

NOTES:

1. ALL CONCRETE AT WALKS IS NONSTRUCTURAL.
2. JOINTS TO BE LOCATED WHERE SHOWN ON PLAN, OR TO MATCH EXISTING JOINTS WHERE INDICATED. CONTRACTION JOINT LOCATIONS SHALL MEET REQUIREMENTS WITHIN THE CONCRETE WALK JOINT SPACING CHART.
3. CONSTRUCT 1/2" EXPANSION JOINTS WHERE SHOWN ON PLAN AND AT STRUCTURES. EXPANSION JOINT LOCATIONS SHALL MEET REQUIREMENTS WITHIN THE CONCRETE WALK JOINT SPACING CHART

CONCRETE WALK JOINT SPACING			
CONTRACTION JOINTS (CJ)			EXPANSION JOINTS (EJ)
WIDTH	TRANSVERSE	LONGITUDINAL	
4'	4'	NOT REQ'D	40' MAX
6'	6'	NOT REQ'D	42' MAX
8'	4'	4'	40' MAX
10'	5'	5'	40' MAX
12'	6'	6'	42' MAX

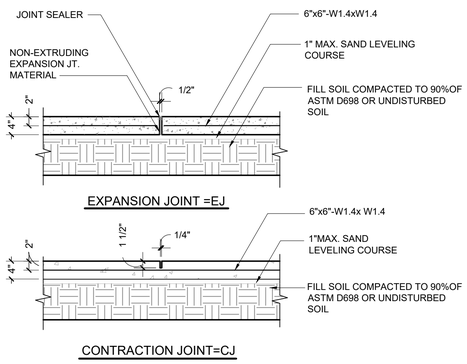

1 4" CONCRETE SIDEWALK

N.T.S.

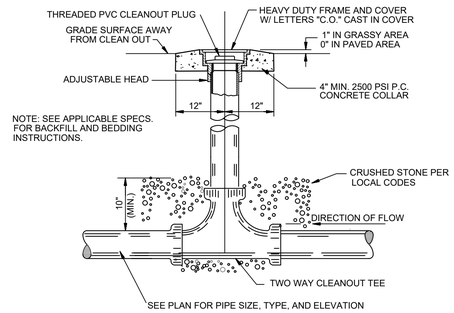

2 DOUBLE SANITARY SEWER CLEANOUT

N.T.S.

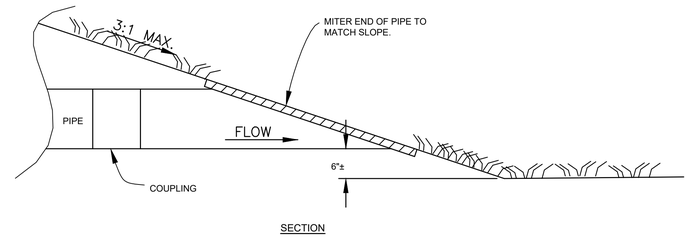

3 MITERED DRAIN OUTLET DETAIL

N.T.S.

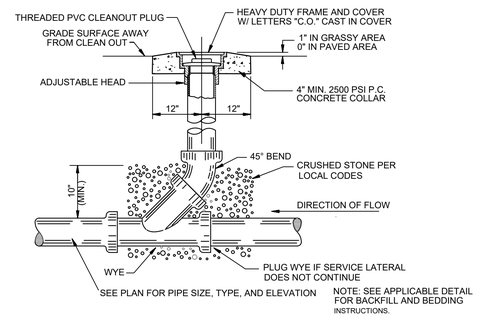

4 SANITARY SEWER CLEANOUT

N.T.S.

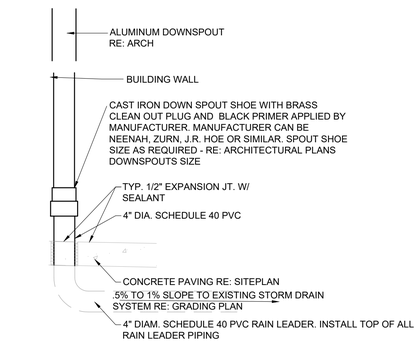

*NOTE: PAINT DOWN SPOUT SHOE AND EXPOSED PORTION OF PVC RAIN LEADER, EQUAL TO SHERWIN WILLIAMS B55T104. ALL CAST IRON IS TO BE HOT DIPPED GALVANIZED PRIOR TO PAINTING.

5 DOWNSPOUT SHOE DETAIL

N.T.S.

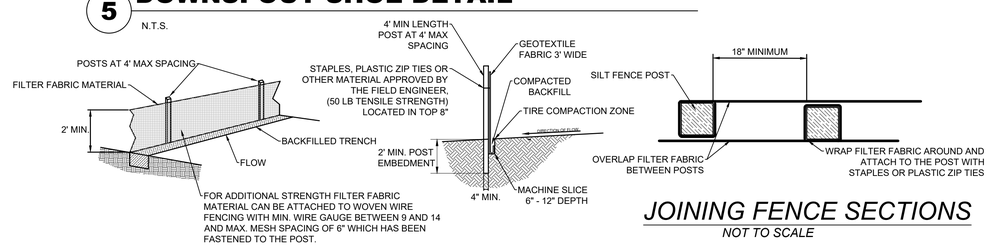

JOINING FENCE SECTIONS

NOT TO SCALE

6 NOT USED

N.T.S.

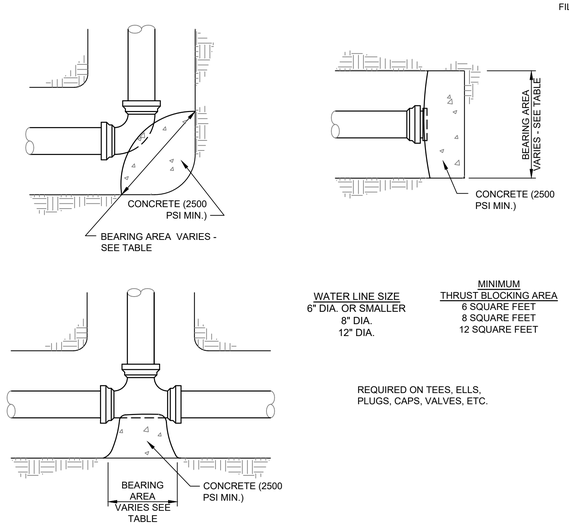

WATER LINE SIZE	MINIMUM THRUST BLOCKING AREA
6" DIA. OR SMALLER	6 SQUARE FEET
8" DIA.	8 SQUARE FEET
12" DIA.	12 SQUARE FEET

REQUIRED ON TEES, ELLS, PLUGS, CAPS, VALVES, ETC.

7 THRUST BLOCK DETAILS

N.T.S.

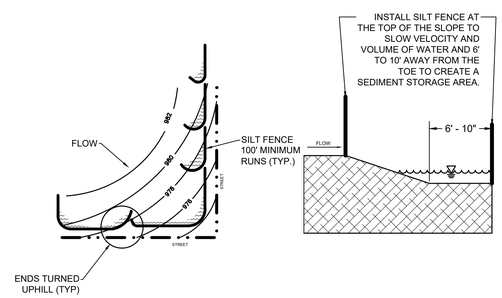

NOTES:

1. IN ORDER TO CONTAIN WATER, THE ENDS OF THE SILT FENCE MUST BE TURNED UPHILL.
2. LONG PERIMETER RUNS OF SILT FENCE MUST BE LIMITED TO 100'. RUNS SHOULD BE BROKEN UP INTO SEVERAL SMALLER SEGMENTS TO MINIMIZE WATER CONCENTRATIONS.
3. LONG SLOPES SHOULD BE BROKEN UP WITH INTERMEDIATE ROWS OF SILT FENCE TO SLOW RUNOFF VELOCITIES.
4. ATTACH FABRIC TO UPSTREAM SIDE OF POST. GEOTEXTILE FABRIC SHALL MEET THE REQUIREMENTS OF AASHTO M288.
5. INSTALL POSTS A MINIMUM OF 2' INTO THE GROUND.
   MIN, LENGTH 4'
   HARDWOOD 1 3/16" X 1 3/16"
   NO. 2 SOUTHERN PINE 2 5/16" X 2 5/8"
   STEEL 1.33 LB/FT
6. TRENCHING WILL ONLY BE ALLOWED FOR SMALL OR DIFFICULT INSTALLATION, WHERE SLICING MACHINE CANNOT BE REASONABLY USED.
7. AT LEAST 10" OF SILT FENCE SHALL BE BURIED.

MAINTENANCE:

1. REMOVE AND DISPOSE OF SEDIMENT DEPOSITS WHEN THE DEPOSIT APPROACHES ⅓ THE HEIGHT OF SILT FENCE.
2. REPAIR AS NECESSARY TO MAINTAIN FUNCTION AND STRUCTURE.

8 SILT FENCE

N.T.S.

STATE OF MISSOURI
MIKE PARSON, GOVERNOR

BID DOCUMENTS

GLMV Architecture
9229 Ward Parkway, Kansas City, MO 64114
Tel: (816) 444-4200
www.glmv.com
GLMV Architecture, Inc
MO State Certificate of Authority #F00364807

STATE OF MISSOURI
ANGELA MORGAN NUMBER PE-2018031541
PROFESSIONAL ENGINEER

OFFICE OF ADJUTANT GENERAL
DIVISION OF FACILITIES MANAGEMENT, DESIGN AND CONSTRUCTION
DEPARTMENT OF PUBLIC SAFETY
Missouri Army National Guard

Camp Clark Training Site

18159 South K Highway
Nevada, Missouri 64772
PROJECT NO. T1930-01

FITNESS CENTER - STORM SHELTER

PROJECT # T1930-01
SITE # 6275
ASSET # 8136274078

REVISION:
DATE:
REVISION:
DATE:
REVISION:
DATE:
ISSUE DATE: 07/02/2020

CAD DWG FILE:

DRAWN BY: JIH
CHECKED BY: ALM
DESIGNED BY: GDW

SHEET TITLE:

DETAILS

SHEET NUMBER:

C-501

7 OF 33 SHEETS

07/02/2020

BID DOCUMENTS

NOTES:

1. CONCRETE PAVEMENT FOR PARKING IS CONSIDERED STRUCTURAL AND SUBGRADE PREPARATION SHALL BE AS SPECIFIED IN GEOTECHNICAL REPORT.
2. CONSTRUCTION TRAFFIC SHALL NOT BE ALLOWED ON COMPLETED OR PARTIALLY COMPLETED PAVEMENT SECTIONS.
3. IT IS IMPORTANT BOTH FUNCTIONALLY AND AESTHETICALLY FOR JOINTS IN CONCRETE PAVEMENT TO HAVE A CONSISTENT PATTERN.
4. JOINT SPACING SHOULD BE THOUGHT OUT AND ESTABLISHED PRIOR TO PLACING ANY CONCRETE. THIS INCLUDES JOINTING IN THE CONCRETE PAVEMENT AND ON WHEELCHAIR RAMPS, ETC.
5. PEDESTRIAN CONCRETE SIDEWALKS SHALL RECEIVE HAND TOOLED JOINTS.
6. THE PAVING PLANS, DETAILS, SPECIFICATIONS, AND NOTES CONTAIN SPECIFIC REQUIREMENTS FOR JOINTING. THE FOLLOWING ITEMS SHALL SERVE AS GUIDELINES FOR THE CONTRACTOR WHEN DEVELOPING THE JOINTING PLAN.

   JOINTING IN PAVEMENT SHALL BE AT RIGHT ANGLES TO EDGE OF PAVEMENT LINES WHEREVER POSSIBLE.

   JOINT SPACING IN PAVEMENT SHALL GENERALLY NOT EXCEED 3 TIMES THE PAVEMENT THICKNESS. FOR EXAMPLE, 4-INCH SLAP WOULD HAVE A MAXIMUM SPACING OF 12 FEET.

   JOINTS IN PAVEMENT SHALL NOT CREATE "L" SHAPED OR ODD SHAPED SECTIONS OR SECTIONS WITH NARROW POINTED PORTIONS THAT COULD BE SUBJECT TO CRACKING AND BREAKING.

   CONTRACTION JOINT SPACING SHALL GENERALLY NOT EXCEED 1.5 TIMES LONGITUDINAL JOINT SPACING.

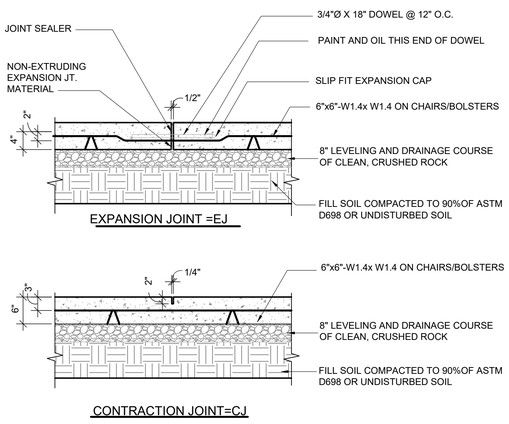

1 6" THICK CONCRETE PAVEMENT

3/4" = 1'-0"

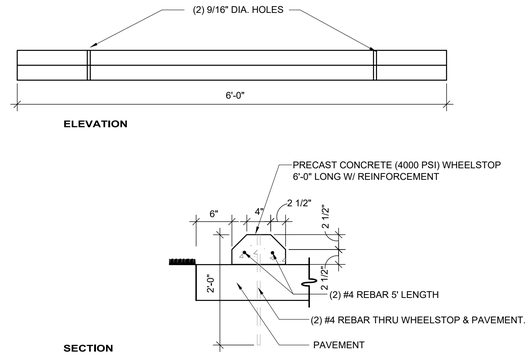

NOTE:
CENTER WHEELSTOP BETWEEN PARKING STRIPES UNLESS OTHERWISE SPECIFIED ON PLANS.

2 WHEEL STOP DETAIL

1' = 1'-0"

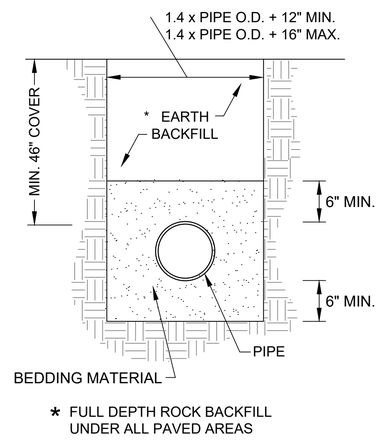

4 SANITARY SEWER AND WATER TRENCH DETAIL

N.T.S

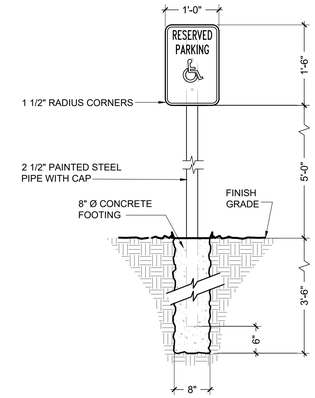

NOTES:
1. ALL ACCESSIBLE STALLS TO BE 11' WIDE. REQUIRED ACCESSIBLE SIGN SHALL BE LOCATED SO IT CANNOT BE OBSCURED BY A VEHICLE PARKED IN THE SPACE. RECOMMENDED MOUNTING HEIGHT FROM GRADE TO THE BOTTOM OF THE SIGN IS : 60" -72".
2. ACCESSIBLE PARKING SPACES SHALL BE LOCATED ON THE SHORTEST ACCESSIBLE ROUTE TO AN ACCESSIBLE ENTRANCE MAINTAINING A MINIMUM CLEARANCE OF 3' AT ALL TIMES.
3. PARKING SPACES & ACCESS AISLES SHALL NOT EXCEED 2% CROSS SLOPE.

3 ADA ACCESSIBLE PARKING SIGN

3/4" = 1'-0"

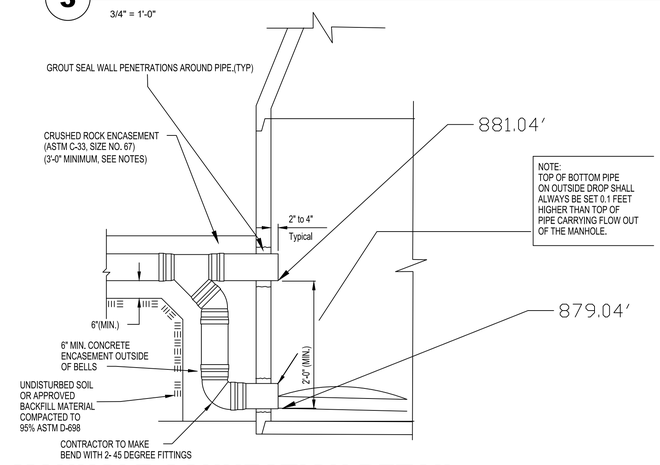

5 MANHOLE CONNECTION DETAIL

N.T.S

STATE OF MISSOURI
MIKE PARSON,
GOVERNOR

BID DOCUMENTS

GLMVArchitecture
9229 Ward Parkway, Kansas City, MO 64114
Tel: (816) 444-4200
www.glmv.com
GLMV Architecture, Inc
MO State Certificate of Authority #F00364807

STATE OF MISSOURI
ANGELA MORGAN NUMBER PE-2018031541
PROFESSIONAL ENGINEER

OFFICE OF ADJUTANT GENERAL
DIVISION OF FACILITIES MANAGEMENT, DESIGN AND CONSTRUCTION
DEPARTMENT OF PUBLIC SAFETY
Missouri Army National Guard

Camp Clark Training Site

18159 South K Highway
Nevada, Missouri 64772
PROJECT NO. T1930-01

FITNESS CENTER - STORM SHELTER

PROJECT #	T1930-01
SITE #	6275
ASSET #	8136274078

REVISION:	
DATE:	
REVISION:	
DATE:	
REVISION:	
DATE:	
ISSUE DATE:	07/02/2020

CAD DWG FILE:

DRAWN BY:	JIH
CHECKED BY:	ALM
DESIGNED BY:	GDW

SHEET TITLE:

DETAILS

SHEET NUMBER:

C-502

8 OF 33 SHEETS

07/02/2020

1. GENERAL REQUIREMENTS:

A. BUILDING CODE: 2015 INTERNATIONAL BUILDING CODE
ICC 500-2014
UFC 1-200-01
UFC 4-010-01

B. FLOOR LIVE LOADS:

a. CLASSROOM		100 PSF
b. MECHANICAL		150 PSF

C. ROOF LIVE LOAD (ICC 500) 100 PSF

D. ROOF SNOW LOAD

a. GROUND SNOW LOAD,	PG	20 PSF
b. FLAT ROOF SNOW LOAD,	PF	20 PSF
c. SNOW EXPOSURE FACTOR,	CE	1.0
d. SNOW LOAD IMPORTANCE FACTOR,	I	1.2
e. THERMAL FACTOR, HEATED STRUCTURE,	CT	1.0
f. DRIFTING		PER CODE

E. WIND LOADS (ICC 500)

a. BASIC WIND SPEED (3 SECOND GUST)		250 MPH
b. RISK CATEGORY		IV
c. WIND EXPOSURE		C
d. INTERNAL PRESSURE COEFFICIENT (GCPI)		+/- 0.55
e. DIRECTIONALITY FACTOR,	Kd	1.0
f. TOPOGRAPHIC FACTOR,	Kzt	1.0
g. COMPONENTS AND CLADDING		PER CODE

F. SEISMIC LOADS

a. RISK CATEGORY		IV
b. SPECTRAL RESPONSE ACCELERATION,	SS	0.124G
	S1	0.077G
c. SEISMIC IMPORTANCE FACTOR,	I	1.5
d. SPECTRAL RESPONSE COEFFICIENTS,	SDS	0.099
	SD1	0.087
e. SITE CLASS		C
f. SEISMIC DESIGN CATEGORY		C
g. BASIC SEISMIC-FORCE-RESISTING SYSTEM		ORDINARY REINFORCED MASONRY SHEAR WALLS
h. RESPONSE MODIFICATION COEFFICIENT,	R	2
i. SEISMIC RESPONSE COEFFICIENT,	CS	0.074
j. DESIGN BASE SHEAR		0.074W
k. ANALYSIS PROCEDURE		EQUIVALENT LATERAL FORCE

G. FLOOD LOADS (NOT APPLICABLE)

H. DEAD LOADS

a. STRUCTURE	ACTUAL WEIGHT
b. MISC. UNDERHUNG MECHANICAL	10 PSF

I. CONTRACTOR SHALL REVIEW AND COMPARE THE STRUCTURAL DRAWINGS WITH ALL OTHER CONTRACT DOCUMENTS, VERIFYING ALL DIMENSIONS AND ELEVATIONS, AND REPORT ANY INCONSISTENCIES TO THE ENGINEER BEFORE PROCEEDING WITH THE WORK.

J. THE BUILDING IS NOT STRUCTURALLY STABLE UNTIL ALL CONNECTIONS, FRAMING, AND PERMANENT BRACING ARE COMPLETE AND HAVE ACHIEVED THEIR DESIGN STRENGTH. CONTRACTOR IS SOLELY RESPONSIBLE FOR MAINTAINING STRUCTURAL STABILITY DURING ERECTION AND CONSTRUCTION. TEMPORARY BRACING SYSTEMS ARE NOT TO BE REMOVED UNTIL STRUCTURAL WORK IS COMPLETE. THE DESIGN LOADS SHALL NOT BE EXCEEDED DURING CONSTRUCTION.

K. FURNISH ALL LABOR, MATERIALS AND EQUIPMENT NECESSARY TO COMPLETE THE WORK SHOWN OR INFERRED BY THESE DRAWINGS.

2. SPECIAL INSPECTIONS:

A. THE STRUCTURAL DESIGN FOR THIS PROJECT IS BASED ON THE COMPLETION OF SPECIAL INSPECTIONS DURING CONSTRUCTION IN ACCORDANCE WITH CHAPTER 17 OF THE 2015 INTERNATIONAL BUILDING CODE AND THE 2014 VERSION OF THE ICC-500. THE CONTRACTOR SHALL EMPLOY ONE OR MORE QUALIFIED SPECIAL INSPECTORS TO PROVIDE THE REQUIRED SPECIAL INSPECTIONS. SPECIAL INSPECTIONS SHALL BE DONE UNDER THE SUPERVISION OF A REGISTERED DESIGN PROFESSIONAL.

B. THE FOLLOWING ITEMS REQUIRE SPECIAL INSPECTION. THE GENERAL CONTRACTOR SHALL PROVIDE NOTIFICATION TO THE SPECIAL INSPECTOR WHEN ITEMS REQUIRING SPECIAL INSPECTION ARE READY FOR OBSERVATION AND PROVIDE ACCESS TO THE ITEMS REQUIRING SPECIAL INSPECTION.

a. PLACEMENT OF CONCRETE
b. TESTING OF CONCRETE
c. PLACEMENT OF REINFORCING STEEL
d. BOLTS & ANCHORS EMBEDDED IN CONCRETE
e. REINFORCED MASONRY CONSTRUCTION – LEVEL B INSPECTION
f. STORM DOOR, LOUVER, VAULTS AND SHUTTER ANCHORAGE
g. STRUCTURAL STEEL FRAMING
h. HIGH STRENGTH BOLTING
i. STRUCTURAL WELDING
j. ROOF AND FLOOR DECK ATTACHMENT
k. POST INSTALLED ANCHORS IN CONCRETE
l. VERIFICATION OF SOILS, EXCAVATIONS, FILLING & COMPACTION
m. SHOP FABRICATION OF STRUCTURAL STEEL (IF STEEL FABRICATOR IS NOT AISC OR MBMA CERTIFIED)

C. THE SPECIAL INSPECTOR SHALL FURNISH SPECIAL INSPECTION REPORTS TO THE OWNER, CONTRACTOR, ARCHITECT AND STRUCTURAL ENGINEER ON A BI-WEEKLY BASIS.

D. ALL DISCREPANCIES SHALL BE BROUGHT TO THE IMMEDIATE ATTENTION OF THE CONTRACTOR FOR CORRECTION. IF LEFT UNCORRECTED THE DISCREPANCIES SHALL BE BROUGHT TO THE ATTENTION OF THE BUILDING OFFICIAL, OWNER, ARCHITECT AND STRUCTURAL ENGINEER.

E. THE SPECIAL INSPECTOR SHALL SUBMIT A FINAL SIGNED AND SEALED REPORT STATING THAT THE WORK REQUIRING SPECIAL INSPECTION WAS, TO THE BEST OF THE SPECIAL INSPECTOR'S KNOWLEDGE, IN CONFORMANCE WITH APPROVED PLANS AND SPECIFICATIONS.

F. ICC500-2014 STANDARD FOR THE DESIGN AND CONSTRUCTION OF STORM SHELTERS: THE DESIGNER SHALL EMPLOY A REGISTERED DESIGN PROFESSIONAL TO PERFORM THE STRUCTURAL OBSERVATIONS REQUIRED BY THE ICC-500, SECTION 106.4. THESE OBSERVATIONS ARE IN ADDITION TO OTHER INSPECTIONS AND TESTING REQUIRED BY THE BUILDING CODE SPECIFIED ABOVE. THESE OBSERVATIONS SHALL NOT OBVIATE OR REDUCE THE NEED FOR OTHER INSPECTIONS OR TESTING REQUIRED BY THE BUILDING CODE.

3. FOUNDATIONS:

A. THE GENERAL CONTRACTOR AND FOUNDATION CONTRACTOR SHALL UNDERSTAND THE SURVEY AND GEOTECHNICAL REPORT BEFORE BIDDING THE WORK. RECOMMENDATIONS CONTAINED IN THE GEOTECHNICAL REPORT SHALL BE INCLUDED IN THE CONTRACTOR'S WORK, UNLESS SPECIFIED OR DETAILED OTHERWISE.

B. COMPLY WITH ALL ASPECTS OF SOILS REPORT NO. 03381996 DATED NOVEMBER 20, 2019 PREPARED BY PSI, INC. 1211 W. CAMBRIDGE CIRCLE DRIVE, KANSAS CITY, KANSAS 66103. (913) 310-1600.

C. CONTRACTOR SHALL NOTIFY ENGINEER OF ANY UNUSUAL SOIL CONDITIONS THAT ARE IN VARIANCE WITH THE GEOTECHNICAL REPORT OR WHEN DIFFERENT BEARING MATERIAL IS EVIDENT AND THERE IS A QUESTIONS OF BEARING CAPACITY.

D. THE CONTRACTOR SHALL RETAIN A GEOTECHNICAL ENGINEER REGISTERED IN THE STATE WHERE THE PROJECT IS LOCATED TO TEST AND OBSERVE ALL EARTHWORK, FOUNDATION, AND SLAB SUPPORT MATERIAL TO VERIFY COMPLIANCE WITH THE DESIGN REQUIREMENTS AND CONTRACT DOCUMENTS. CONCRETE SHALL NOT BE PLACED WITHOUT GEOTECHNICAL ENGINEER'S APPROVAL.

E. FOUNDATIONS AND STRIP FOOTINGS ARE DESIGNED TO BEAR ON WEATHERED SANDSTONE CAPABLE OF SUSTAINING 2,800 PSF. IF SANDSTONE IS NOT ENCOUNTERED AT FOOTING BEARING INDICATED, CONTRACTOR SHALL OVER-EXCAVATE AND BACKFILL WITH LEAN CONCRETE PER THE GEOTECHNICAL REPORT.

F. CONTRACTORS SHALL BE RESPONSIBLE FOR REMOVAL AND DISPOSAL OF UNSUITABLE FILL MATERIAL OR ORGANIC MATERIAL TO AN APPROVED LANDFILL.

4. CONCRETE:

A. CAST-IN-PLACE CONCRETE CONSTRUCTION SHALL CONFORM TO THE LATEST AMERICAN CONCRETE INSTITUTE DOCUMENTS, ACI-301, 305, 306, 315, 318 AND 347 AND CONCRETE REINFORCING STEEL INSTITUTE MANUAL OF STANDARD PRACTICE UNLESS OTHERWISE NOTED IN THESE CONTRACT DOCUMENTS.

B. ALL CONCRETE, UNLESS OTHERWISE NOTED, SHALL DEVELOP A 28 DAY COMPRESSIVE STRENGTH AND HAVE MAXIMUM WATER/CEMENT RATIOS AS FOLLOWS:

FOOTINGS, GRADE BEAMS:	4000 PSI ($w/c \leq 0.50$)
SLAB-ON-GRADE:	4000 psi ($W/C \leq 0.45$)
EXTERIOR CONCRETE FLATWORK	4500 PSI ($w/c \leq 0.45$)

C. IT IS THE INTENT OF THESE CONCRETE SPECIFICATIONS THAT THE CONTRACTOR SUPPLY CONCRETE MIXES WITH A MINIMUM AMOUNT OF WATER IN ORDER TO LIMIT PLASTIC SHRINKAGE CRACKING IN FRESHLY PLACED CONCRETE. IT IS EXPECTED THAT WORKABILITY FOR CONCRETE MIXES WILL REQUIRE THE ADDITION OF WATER-REDUCING AND/OR SUPER-PLASTICIZING CHEMICAL ADMIXTURES. WATER SHALL NOT BE ADDED TO THE CONCRETE MIX ON SITE.

D. CONCRETE SLUMP SHALL BE A MAXIMUM OF 4" +/- 1" (ASTM C-143) AS DELIVERED IN THE FIELD. CONTRACTOR MAY USE CHEMICAL ADMIXTURES TO ATTAIN A MAXIMUM SLUMP OF 8" FOR WORKABILITY.

E. FLY ASH MAY BE USED AT A RATE NOT TO EXCEED 15% OF THE TOTAL CEMENT CONTENT.

F. CONCRETE EXPOSED TO WEATHER, PARKED VEHICLES, AND/OR DEICING CHEMICAL SHALL CONTAIN 6% (+/- 1 1/2%) ENTRAINED AIR BY VOLUME FOR 3/4" AGGREGATE.

G. ALL CONTRACTION JOINTS IN CONCRETE SLABS-ON-GRADE SHALL BE CUT TO 1/4 THE DEPTH. CUT JOINTS AS SOON AS POSSIBLE AFTER CONCRETE HAS BEEN PLACED WITHOUT DISLODGING AGGREGATE, OR USE KEYED COLD JOINT. CONTRACTION JOINTS IN SLAB-ON-GRADE SHALL BE AS SHOWN ON PLANS, WHERE NOT SHOWN, LIMIT CONTROLLED AREAS TO NOT MORE THAN 169 SQUARE FEET NOT GREATER THAN 13' ON ANY SIDE FOR THE 5" SLAB. CONSTRUCTION JOINTS MAY BE SUBSTITUTED FOR CONTRACTION JOINTS AT CONTRACTOR'S OPTION.

H. CONSTRUCTION JOINTS IN BEAMS, SLABS AND GRADE BEAMS SHALL OCCUR AT THIRD POINTS OF THE SPAN UNLESS NOTED OTHERWISE. PROVIDE ONE 1 1/2" DEEP x 3 1/2" HORIZONTAL SHEAR KEY PER FOOT OF DEPTH AT JOINT. ENGINEER SHALL APPROVE ALL CONTROL JOINT LOCATIONS PRIOR TO PLACING CONCRETE.

I. PRIOR TO PLACING CONCRETE IN ANY LOCATION, IT IS THE RESPONSIBILITY OF THE GENERAL CONTRACTOR TO HAVE THOROUGHLY CHECKED AND COORDINATED ALL DIMENSIONS, ELEVATIONS, OPENINGS, RECESSES, AND BLOCKOUTS SHOWN ON THE ARCHITECTURAL, STRUCTURAL, ELECTRICAL AND MECHANICAL DRAWINGS. IN THE EVENT ERRORS, CONFLICTS, OR OMISSIONS EXIST, IT SHALL BE THE CONTRACTOR'S RESPONSIBILITY TO CONTACT THE ARCHITECT OR ENGINEER FOR NECESSARY CORRECTIVE ACTION.

J. EMBEDDED ITEMS ARE TO BE FURNISHED AND INSTALLED BY THE CONTRACTOR PRIOR TO PLACING CONCRETE. ANCHOR RODS SHALL BE HELD IN PLACE WITH A RIGID TEMPLATE.

K. NO ALUMINUM ITEMS SHALL BE EMBEDDED IN CONCRETE.

5. REINFORCING STEEL

A. REINFORCING SHALL BE DETAILED, FABRICATED, PLACED, AND SUPPORTED IN ACCORDANCE WITH ACI 315, LATEST EDITION.

B. ALL REINFORCING STEEL SHALL BE ASTM A615 GRADE 60, EXCEPT WELDED REINFORCING WHICH SHALL BE ASTM A706 GRADE 60.

C. ALL WELDED WIRE FABRIC SHALL BE ASTM A185. ALL COLD DRAWN WIRE SHALL BE ASTM A82.

D. ALL ACCESSORIES FOR SUPPORTING REINFORCING SHALL BE GALVANIZED OR HAVE PLASTIC-COATED FEET. WHERE CONCRETE IS SAND BLASTED OR BUSH HAMMERED PROVIDE ACCESSORIES OF STAINLESS STEEL.

E. PROVIDE CORNER BARS AT THE EXTERIOR FACE OF ALL WALL AND GRADE BEAM CORNERS AND INTERSECTIONS EQUAL TO HORIZONTAL BARS.

F. PROVIDE AT LEAST TWO VERTICAL #5 BARS AT ALL STEPS IN FOUNDATION WALLS, FOOTINGS, AND GRADE BEAMS.

G. THE FOLLOWING ADDITIONAL REINFORCING STEEL SHALL BE PROVIDED IN STOCK LENGTHS FOR GENERAL JOB USE AS DIRECTED BY THE ENGINEER. ALL COSTS FOR MATERIALS, FIELD FABRICATION AND PLACEMENT NECESSARY TO COMPLETE THE WORK SHALL BE INCLUDED.

8 – #4X30'-0" 8 – #5X30'-0" 4 – #6X30'-0"

H. STANDARD COVERAGE OF REINFORCING, UNLESS OTHERWISE SHOWN, SHALL BE AS FOLLOWS (UFC 3-301):

CAST AGAINST EARTH, PERMANENTLY EXPOSED TO WEATHER.....3"
EXPOSED TO EARTH & WEATHER (FORMED).....3"
NOT EXPOSED TO EARTH OR WEATHER: SLABS, WALLS.....1"
BEAMS AND COLUMNS.....2"

I. WELDED WIRE FABRIC SHALL BE LAPPED ONE FULL MESH SPACING.

J. AT ALL OPENINGS IN CONCRETE WALLS AND SLABS, ADD (2) #5 (OPENING DIMENSION PLUS 5'-0") AT EACH OF THE FOUR SIDES AND ADD (2) #5 x 5'-0" DIAGONALLY AT EACH OF FOUR CORNERS.

K. ALL SPLICES SHALL BE LAPPED NOT LESS THAN 48 BAR DIAMETERS, OR 24 INCHES, WHICHEVER IS GREATER. STAGGER SPLICES IN ACCORDANCE WITH ACI 318.

L. LAP TOP BARS AT MID-SPAN AND BOTTOM BARS AT SUPPORTS, UNO. STAGGER LAP LOCATIONS.

6. MASONRY REINFORCEMENT AND ATTACHMENT:

A. MASONRY CONSTRUCTION SHALL CONFORM TO THE LATEST AMERICAN CONCRETE INSTITUTE DOCUMENTS, ACI-530 AND 530.1 AND IBC, CHAPTER 21 UNLESS OTHERWISE NOTED IN THESE CONTRACT DOCUMENTS.

B. REINFORCED MASONRY MATERIALS:

CONCRETE MASONRY UNITS.....ASTM C90
EXTERIOR LOCATIONS.....NORMAL WEIGHT
INTERIOR LOCATIONS.....NORMAL WEIGHT
MINIMUM COMPRESSIVE STRENGTH (F'm) 2500PSI

MORTAR.....ASTM C270, TYPE S

GROUT.....ASTM C476
MINIMUM COMPRESSIVE STRENGTH.....2500PSI

REINFORCING STEEL.....ASTM A615, GRADE 60

C. ALL CMU WALLS SHALL BE REINFORCED VERTICALLY AS SPECIFIED ON DRAWINGS WITH A MINIMUM OF (1) #5 @ 4'-0" OC AND A MINIMUM OF (1) #5 OR THE SPECIFIED BAR FOR THAT WALL. AT THE ENDS AND CORNERS OF WALLS, AT EACH SIDE OF CONTROL OR EXPANSION JOINTS, AND AT EACH SIDE OF EACH OPENING, ALL IN FULLY GROUTED CELLS.

D. PROVIDE BOND BEAMS AT THE TOP OF EACH WALL AND WHERE SHOWN. BOND BEAMS SHALL HAVE (2) #5 CONTINUOUS AND BE FULLY GROUTED. VERTICAL BARS SHALL EXTEND INTO THE BOND BEAM.

E. PROVIDE DOWELS INTO FLOOR OR FOUNDATION AT BOTTOM OF WALL TO MATCH SIZE AND SPACING OF VERTICAL WALL REINFORCING UNLESS NOTED OTHERWISE ON THE DRAWINGS.

F. STABILIZE TOP OF ALL VERTICALLY REINFORCED WALLS PER DRAWINGS DETAILS.

G. MIN LAP LENGTHS REQUIRED (TWO BARS PER CELL):

#5 BARS 2'-8" #6 BARS 4'-9"

H. MAXIMUM HEIGHT OF GROUT POUR SHALL NOT EXCEED 5'-4".

I. ALL MASONRY SHALL BE RUNNING BOND, UNLESS NOTED OTHERWISE.

J. SEE STRUCTURAL WALL ELEVATIONS FOR MASONRY CONTROL JOINT LOCATIONS AND ARCHITECTURAL DETAILS FOR ADDITIONAL INFORMATION. MAXIMUM CONTROL JOINT WIDTH SHALL NOT EXCEED 3/8".

K. REINFORCEMENT SHALL BE PLACED PRIOR TO GROUTING.

L. VERTICAL CELLS TO BE GROUTED SHALL HAVE A VERTICAL ALIGNMENT SUFFICIENT TO MAINTAIN A TOTAL MINIMUM CLEAR AREA OF 3" X 3". ALL OVERHANGING MORTAR, OBSTRUCTIONS AND DEBRIS SHALL BE CLEANED FROM THE INSIDE OF CELLS PRIOR TO GROUTING.

M. TOLERANCE FOR THE PLACEMENT OF REINFORCEMENT IN WALLS SHALL BE PLUS OR MINUS 1/2 INCH FOR 12 INCH MASONRY. REINFORCEMENT SHALL BE SECURED AGAINST DISPLACEMENT PRIOR TO GROUTING AT THE TOP OF EACH GROUT LIFT.

N. UNITS SHALL BE LAID TO THE FULL HEIGHT OF THE GROUT POUR AND GROUT SHALL BE PLACED IN A CONTINUOUS LIFT. BETWEEN GROUT POURS, A HORIZONTAL CONSTRUCTION JOINT SHALL BE FORMED BY STOPPING GROUT 1-1/2 INCHES BELOW A MORTAR JOINT EXCEPT AT THE TOP OF THE WALL.

O. INITIAL BED JOINT THICKNESS SHALL NOT BE LESS THAN 1/4 INCH NOR MORE THAN 3/4 INCH. SUBSEQUENT JOINTS SHALL NOT BE LESS THAN 1/4 INCH NOR MORE THAN 5/8 INCH.

P. ALL WALLS SHALL BE REINFORCED WITH HORIZONTAL BOND BEAMS WITH (2) #5 CONTINUOUS AT 48" OC, UNO. PROVIDE CORNER BARS AND LAP SPLICES AS REQUIRED.

7. STRUCTURAL STEEL:

A. ALL STRUCTURAL STEEL SHALL BE DETAILED, FABRICATED, AND ERECTED IN ACCORDANCE WITH AISC, "SPECIFICATION FOR STRUCTURAL STEEL BUILDINGS" AND AISC, "CODE OF STANDARD PRACTICE FOR STEEL BUILDINGS AND BRIDGES".

B. STEEL MATERIALS, UNLESS NOTED OTHERWISE ON THE PLANS:

a. WIDE FLANGE SHAPES AND WT SECTIONS	ASTM A992
b. ANGLES, PLATES, CHANNELS	ASTM A36
c. RECTANGULAR HSS SHAPES	ASTM A500, GRADE C
d. ROUND HSS SHAPES	ASTM A500, GRADE C
e. ANCHOR RODS	ASTM F1554, GRADE 36
f. HIGH-STRENGTH BOLTS	ASTM A325, TYPE 1
g. HEADED STUDS	ASTM A108, GR 1015-1020
h. WELDED CONNECTIONS	E70XX ELECTRODES

C. ALL BOLTS SHALL BE 3/4" DIAMETER BOLTS WITH HEAVY HEX HEADS, UNLESS NOTED OTHERWISE ON DRAWINGS. ALL CONNECTIONS SHALL HAVE A MINIMUM OF TWO 3/4" DIAMETER BOLTS, SNUG-TIGHTENED TYPE CONNECTIONS UNLESS NOTED OTHERWISE IN THE DOCUMENTS.

D. BEAM CONNECTIONS, NOT OTHERWISE INDICATED, SHALL BE DETAILED TO SUPPORT ONE-HALF THE TOTAL ALLOWABLE UNIFORM LOAD CAPACITY FOR THE GIVEN BEAM, SPAN AND GRADE OF STEEL.

E. ALL STRUCTURAL STEEL WELDS IN THE SHOP OR THE FIELD SHALL BE PERFORMED BY A CERTIFIED WELDER AND SHALL CONFORM TO THE CURRENT REQUIREMENTS OF A.W.S.

F. SHOP WELDED AND FIELD BOLTED CONNECTIONS ARE PREFERRED, UNLESS OTHERWISE SHOWN.

G. FILLET WELDS NOT SPECIFICALLY SIZED IN THESE DOCUMENTS SHALL BE THE MINIMUM SIZE IN ACCORDANCE WITH AWS D1.1 LATEST EDITION, DEPENDENT ON THE THINNER PART JOINED, BUT NO LESS THAN 3/16".

H. ALL STRUCTURAL STEEL SHALL HAVE ONE COAT OF RUST INHIBITOR PRIMER PAINT CONFORMING TO THE PROJECT MANUAL. FIELD TOUCHUP ALL UNPAINTED AREAS AND WELDED AREAS.

I. PROVIDE GALVANIZED BOLTS AND ANCHORS AT ALL LOCATIONS WHERE ANCHORS COME INTO CONTACT WITH MASONRY OR CONCRETE. CLEAN AREAS WHERE GALVANIZING IS DAMAGED OR MISSING AND REPAIR.

J. ALL OPENINGS IN ROOF SHALL BE LOCATED BETWEEN REINFORCING STEEL PRIOR TO CONCRETE BEING PLACED. OPENINGS OVER 8" IN ANY DIRECTION SHALL HAVE A W8X18 (WITH HEADED STUDS AT 24" ON CENTER) ON ALL 4 SIDES FRAMED BETWEEN ROOF BEAMS, UNLESS OTHERWISE NOTED ON DRAWINGS.

K. THE CONTRACTOR SHALL PROVIDE SHELF ANGLES, GLASS SUPPORTS AND OTHER MISCELLANEOUS STEEL, AS SHOWN ON THE DRAWINGS AND AS REQUIRED TO PROVIDE SUPPORT (STABILIZATION) AROUND AND THROUGHOUT THE BUILDING. NOT EVERY DETAIL IS SHOWN. SEE ARCHITECTURAL DRAWINGS FOR ADDITIONAL MISCELLANEOUS METAL DETAILS.

L. THE STEEL FABRICATOR SHALL PARTICIPATE IN THE AISC QUALITY CERTIFICATION PROGRAM AND BE DESIGNATED AS AN AISC-CERTIFIED PLANT.

(CONTINUED ON S-002)

1 **STRUCTURAL GENERAL NOTES**
NTS

STATE OF MISSOURI
MIKE PARSON,
GOVERNOR

STATE OF MISSOURI
KATHLEEN J. HAGEN
NUMBER
E-2000155328
REGISTERED PROFESSIONAL ENGINEER
6-26-20

BID DOCUMENTS

GLMV Architecture
9229 Ward Parkway, Kansas City, MO 64114
Tel: (816) 444-4200
www.glmv.com
GLMV Architecture, Inc

KH ENGINEERING GROUP, P.A.
15377 West 95th Street, Lenexa, KS 66219
Tel: (913) 825-9381
KH Engineering Group, PA
MO State Certificate of Authority #2004032065

OFFICE OF ADJUTANT GENERAL
DIVISION OF FACILITIES MANAGEMENT, DESIGN AND CONSTRUCTION
DEPARTMENT OF PUBLIC SAFETY
Missouri Army National Guard

Camp Clark Training Site
18159 South K Highway
Nevada, Missouri 64772

FITNESS CENTER - STORM SHELTER

PROJECT # T1930-01
SITE # 6275
ASSET # 8136274078

REVISION:
DATE:
REVISION:
DATE:
REVISION:
DATE:
ISSUE DATE: 07/02/2020

CAD DWG FILE: T1930-01_6275_8136274078_S-001.DWG

DRAWN BY: GLB
CHECKED BY: KJH
DESIGNED BY: KHE

SHEET TITLE:
GENERAL NOTES

SHEET NUMBER:
S-001
9 OF 33 SHEETS

8. STEEL DECK:

A. ALL STRUCTURAL STEEL DECK SHALL BE DETAILED, FABRICATED, AND ERECTED IN ACCORDANCE WITH THE LATEST SPECIFICATION OF THE STEEL DECK INSTITUTE DESIGN MANUAL FOR COMPOSITE DECKS, FORM DECKS AND CELLULAR METAL FLOOR DECK WITH ELECTRICAL DISTRIBUTION.

B. ROOF DECK SHALL BE 2" VLI, 19 GAGE GALVANIZED COMPOSITE STEEL DECK WELDED IN A 36/4 PATTERN AT SUPPORTS AND SIDE LAPS/DECK EDGES SHALL BE WELDED AT 18" ON CENTER WITH 5/8"ø PUDDLE WELDS.

9. ANCHORS:

A. CONCRETE:

a. ALL POST-INSTALLED ANCHORS SHALL MEET THE REQUIREMENTS OF ACI 318, CHAPTER 17 AND SHALL BE ACCEPTABLE FOR CRACKED CONCRETE.

b. MECHANICAL ANCHORS FOR CRACKED CONCRETE SHALL BE HILTI KWIK HUS EZ SCREW ANCHORS PER ICC ESR-3027, SIMPSON TITEN HD SCREW ANCHORS PER ICC ESR-2713, DEWALT SCREW-BOLT+ PER ICC ESR-3889, OR APPROVED EQUAL.

c. ADHESIVE ANCHORS FOR CRACKED CONCRETE SHALL BE HILTI HIT-HY 200 SAFE SET SYSTEM PER ICC ESR-3187, SIMPSON AT-XP PER UES ER-263, DEWALT AC200+ PER ICC ESS-4027, OR APPROVED EQUAL. STEEL ANCHORS SHALL BE HILTI HAS-E THREADED ROD, F1554 GRADE 36 THREADED ROD OR CONTINUOUSLY DEFORMED STEEL REINFORCING.

B. SOLID GROUTED MASONRY:

a. ADHESIVE ANCHORS FOR SOLID GROUTED MASONRY SHALL BE HILTI HIT-HY 270 ADHESIVE ANCHORING SYSTEM PER ESR-4143, SIMPSON AT-XP PER UES ER-281, DEWALT AC100+ PER ESR-3200, OR APPROVED EQUAL. STEEL ANCHORS SHALL BE HILTI HAS-E THREADED ROD, F1554 GRADE 36 THREADED ROD OR CONTINUOUSLY DEFORMED STEEL REINFORCING.

C. EMBEDMENT DEPTH SHALL BE DEFINED AS THE DISTANCE FROM THE SURFACE OF THE LOAD BEARING BASE MATERIAL TO THE DEEPEST PART OF THE ANCHOR AFTER THE ANCHOR HAS BEEN DRIVEN INTO THE HOLE BUT NOT YET EXPANDED.

D. ALL HOLES ARE TO BE HAMMER-DRILLED UNLESS NOTED OTHERWISE.

E. EQUIVALENT ANCHORS MAY BE SUBSTITUTED WITH THE ENGINEERS APPROVAL. SUBMITTAL IS THE CONTRACTOR'S RESPONSIBILITY AND MUST INCLUDE EVALUATION REPORTS FROM THE INTERNATIONAL CONFERENCE OF BUILDING OFFICIALS.

F. INSTALL ANCHORS TO MEET THE REQUIREMENTS INDICATED IN THE CONTRACT DOCUMENTS, THE MANUFACTURER'S RECOMMENDATIONS AND ICC CODE REPORTS.

G. ANCHOR CAPACITY IS DEPENDANT UPON THE SPACING BETWEEN ADJACENT ANCHORS AND PROXIMITY OF ANCHORS TO EDGE OF CONCRETE OR MASONRY. INSTALL ANCHORS IN ACCORDANCE WITH SPACING AND EDGE CLEARANCES INDICATED ON THE DRAWINGS.

H. STAINLESS STEEL ANCHORS ARE REQUIRED AT EXPOSED WEATHER CONDITIONS.

I. EXISTING REINFORCING BARS IN THE CONCRETE STRUCTURE SHALL NOT BE CUT DURING ANCHOR INSTALLATION UNLESS NOTED OTHERWISE. LOCATE THE POSITION OF THE EXISTING REINFORCING BARS AT THE LOCATIONS OF THE CONCRETE ANCHORS BY FERROSCAN, GPR, X-RAY OR OTHER APPROVED MEANS.

10. SUBMITTALS:

A. ALL SHOP DRAWINGS AND SUBMITTALS MUST BE REVIEWED AND APPROVED BY THE CONTRACTOR PRIOR TO SUBMITTAL. ENGINEER'S REVIEW OF SHOP DRAWINGS IS LIMITED TO CHECKING FOR GENERAL CONFORMANCE WITH DESIGN DRAWINGS AND STRENGTH OF COMPONENTS AND MATERIALS. CONTRACTOR IS RESPONSIBLE FOR ANY CHANGES FROM THE DESIGN DRAWINGS, QUANTITIES, DIMENSIONAL ERRORS OR OMISSIONS ON THE SHOP DRAWINGS.

B. ALL SHOP DRAWINGS MUST BE ORIGINAL DOCUMENTS AND SHALL NOT BE REPRODUCTIONS OF THESE CONTRACT DOCUMENTS.

C. SUBMIT SHOP DRAWINGS DETAILING FABRICATION OF EACH MEMBER AND ITS CONNECTIONS. DETAIL DRAWINGS ARE TO BE PREPARED UNDER THE SUPERVISION OF A LICENSED PROFESSIONAL ENGINEER.

D. CONTRACTOR SHALL SUBMIT STRUCTURAL SHOP DRAWINGS FOR THE FOLLOWING:

a. CONCRETE MIX DESIGN AND MATERIALS
b. CONCRETE AND MASONRY REINFORCING STEEL
c. MASONRY MATERIALS
d. STRUCTURAL STEEL
e. STEEL DECK

E. DELEGATED DESIGN SUBMITTAL: CONTRACTOR SHALL SUBMIT SIGNED AND SEALED DESIGN ANALYSIS DATA BY A QUALIFIED PROFESSIONAL ENGINEER FOR THE FOLLOWING AND WHERE NOTED IN THE PROJECT SPECIFICATIONS:

a. STRUCTURAL STEEL DESIGN
b. ARCHITECTURAL METALS
c. STORM DOORS AND CONNECTIONS
d. STORM SHUTTERS AND CONNECTIONS
e. STORM LOUVERS AND CONNECTIONS
f. BATHROOM PARTITIONS

1 STRUCTURAL GENERAL NOTES

NTS

(CONTINUED FROM S-001)

@	AT
AR	ANCHOR ROD
ADD	ADDENDUM
ADJ	ADJACENT
AFF	ABOVE FINISH FLOOR
ALT	ALTERNATE
ARCH	ARCHITECTURAL PLANS
BAL	BALANCE
BLDG	BUILDING
BM	BEAM
BO	BOTTOM OF (ADD ITEM)
BOT	BOTTOM
BPL	BASEPLATE
BRG	BEARING
BTWN	BETWEEN
CC	CENTER TO CENTER
CFMF	COLD-FORMED METAL FRAMING
CH	CHANNEL
CIP	CAST-IN-PLACE CONCRETE
CJ	CONTRACTION JOINT
CL	CENTERLINE
CLR	CLEAR
COL	COLUMN
CONC	CONCRETE
CONN	CONNECTION
CONST	CONSTRUCTION
CONT	CONTINUOUS
COORD	COORDINATE
CTR	CENTER
DEG	DEGREE
DET	DETAIL
DIA	DIAMETER
DIAG	DIAGONAL
DIM	DIMENSION
DWG	DRAWING
EA	EACH
EF	EACH FACE
EJ	EXPANSION JOINT
EL	ELEVATION
EQ	EQUAL
EQUIP	EQUIPMENT
EW	EACH WAY
EXIST	EXISTING
EXP	EXPANSION
EXT	EXTERIOR
FDN	FOUNDATION
FF	FINISH FLOOR
FIN	FINISH
FLR	FLOOR
FS	FAR SIDE
FTG	FOOTING
GA	GAGE
GALV	GALVANIZED
GB	GRADE BEAM
GR	GRADE
GYP	GYPSUM
HORIZ	HORIZONTAL
ID	INSIDE DIAMETER
IF	INSIDE FACE
IN	INCHES
JST	JOIST
JT	JOINT
K	KIP (#1000 LBS)
LBS	POUNDS
LLH	LONG LEG HORIZONTAL
LVL	LAMINATED VENEER LUMBER
MAS	MASONRY
MAX	MAXIMUM
MFR	MANUFACTURER
MIN	MINIMUM
MISC	MISCELLANEOUS
MK	MARK
NS	NEAR SIDE
NTS	NOT TO SCALE
OC	ON CENTER
OD	OUTSIDE DIAMETER
OF	OUTSIDE FACE
OPNG	OPENING
OPP	OPPOSITE
OSB	ORIENTED STRAND BOARD
PCF	POUNDS PER CUBIC FOOT
PEMB	PRE-ENGINEERED METAL BUILDING
PL	PLATE
PSF	POUNDS PER SQUARE FOOT
PSI	POUNDS PER SQUARE INCH
RAD	RADIUS
REINF	REINFORCING
SCHED	SCHEDULE
SECT	SECTION
SHT	SHEET
SIM	SIMILAR
SP	SPACES
SPEC	SPECIFICATIONS
SQ	SQUARE
STD	STANDARD
STL	STEEL
T&B	TOP AND BOTTOM
T/	TOP OF (ADD ITEM)
TYP	TYPICAL
UNO	UNLESS NOTED OTHERWISE
VAR	VARIES
VERT	VERTICAL
W/	WITH
W/O	WITHOUT
WL	WIND LOAD
WP	WORK POINT
WWF	WELDED WIRE FABRIC

2 STRUCTURAL ABBREVIATIONS

NTS

UNREINFORCED AND REINFORCED NON-LOAD BEARING CONCRETE MASONRY WALL SCHEDULE

MASONRY f'm = 2500 PSI REINFORCING fy = 60 KSI

NOMINAL CMU WALL THICKNESS	REINFORCING	MAXIMUM ALLOWABLE UNBRACED HEIGHT
6"	#5 AT 48"	12'
8"	NONE	7'
	#5 AT 48"	14'

NOTES:
1. ALL WALLS TO BE BRACED AT TOP OF WALL PER ARCH OR TYPICAL DETAILS.
2. NOTIFY ARCHITECT/ENGINEER IF ANY WALLS EXCEED THE MAXIMUM HEIGHT CRITERIA GIVE IN THE SCHEDULE (FOR REQUIRED REINFORCEMENT).
3. FOR LOCATION OF CONTROL & EXPANSION JOINTS IN MASONRY WALLS NOT SHOWN ON STRUCTURAL, SEE ARCH. REINFORCE EACH SIDE OF JOINTS AND END OF WALL PER GENERAL NOTES.
4. PROVIDE DOWEL INTO FOUNDATION WALL OR BASE SLAB AS APPLICABLE. DOWELS SHALL MATCH VERTICAL WALL REINFORCEMENT U.N.O.
5. REINFORCE WALL OPENINGS (DOORS, WINDOWS, LOUVERS, ETC.) PER 3/S-002.
6. PROVIDE REBAR POSITIONED AT MAXIMUM OF 2'-8" O.C. IN GROUTED CELLS TO ASSURE PROPER PLACEMENT OF REINFORCING STEEL.
7. SHORE CMU WALLS UNTIL LATERAL SUPPORT IS PROVIDED AT TOP OF WALL.
8. FOR ADDITIONAL INFORMATION, SEE GENERAL NOTES ON S-001.

3 TYP NON-LOAD BRG WALLS

NTS

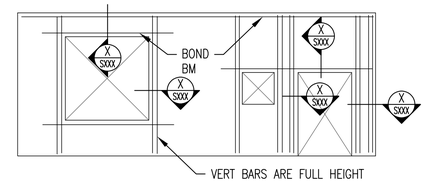

TYPICAL OPENING REINFORCEMENT
1. (2) #5 VERT BARS IN 12" CMU WALLS OR (1) #5 VERT BAR IN 8" CMU WALLS FOR EACH LINE SHOWN ON ELEVATION.
2. VERTICAL REINFORCING BARS SHOWN SEPARATE ON "TYPICAL OPENING" SHALL BE PLACED IN SEPARATE VOIDS.
3. VERTICAL REINF. BARS SHALL BE DOWELED TO FOUNDATION WITH A DOWEL OF MATCHING SIZE AND SPACING.
4. (2) #5 HORIZ. BARS IN 12", OR 8" CMU WALLS FOR EACH LINE SHOWN ON ELEVATION (U.N.O). EXTEND 2'-0" MINIMUM PAST EDGE OF OPENING.
5. CONTRACTOR SHALL COORDINATE AND VERIFY OPENINGS IN MASONRY WALLS.
6. ALL OPENINGS SHALL BE DETAILED ON REINFORCING SHOP DRAWING ELEVATIONS.
7. LINTEL REINFORCING (X/S-XXX)
   A. OPENINGS LESS THAN 3'-4" WIDE ..... 8" HIGH w/ (2) #5
   B. OPENINGS GREATER THAN 3'-4" & LESS THAN 6'-8" ..... 16" HIGH w/ (4) #5

4 TYP OPENINGS IN CMU WALLS

NTS

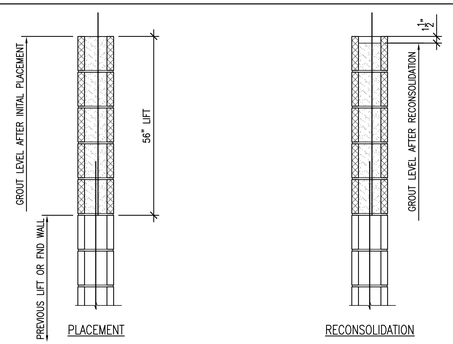

PLACEMENT

1. PLACE GROUT CONTINUOUSLY. DO NOT INTERRUPT GROUTING PROCESS FOR MORE THAN ONE HOUR.
2. VIBRATE GROUT DURING PLACEMENT BY INSERTING VIBRATOR TO BOTT OF LIFT AND THEN PULLING OUT (2 TIMES PER CELL).
3. LEAVE GROUT FLUSH WITH TOP OF BLOCK

RECONSOLIDATION

1. RECONSOLIDATE EACH CELL 30 MIN± AFTER INITIAL PLACEMENT OF GROUT IN THE CELL. RECONSOLIDATE BY INSERTING VIBRATOR 24" INTO LIFT AND PULLING OUT (2 TIMES PER CELL)
2. ADJUST GROUT LEVEL AS REQUIRED AFTER VIBRATING TO TERMINATE GROUT 1-1/2" MIN BELOW TOP OF LIFT.

5 TYP CMU GROUTING

NTS

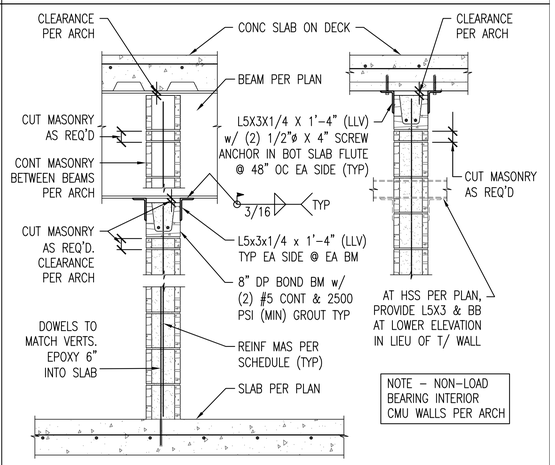

6 T/ WALL BRACING INT CMU

NTS

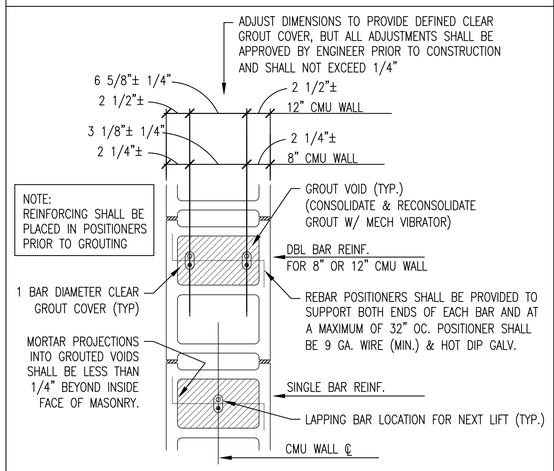

7 TYP CMU REINF. PLACEMENT

NTS

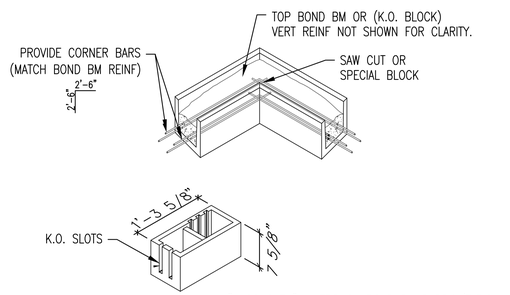

"KNOCKOUT " or TROUGH BOND BM BLOCK (TYPICAL UNIT EXCEPT @ ALL OPNGS; SOLID BOT BD. BM SHALL BE USED. PROVIDE GROUT STOP (RE:SPECS.) UNDER K.O. BOND BEAMS OVER CELLS WHICH ARE NOT TO BE REINFORCED AND GROUTED.

8 TYP BOND BEAM CORNER BARS

NTS

9 SECTION

NTS

STATE OF MISSOURI
MIKE PARSON,
GOVERNOR

STATE OF MISSOURI
KATHLEEN HAGEN
NUMBER
E-2000155328
REGISTERED PROFESSIONAL ENGINEER
6-26-20

BID DOCUMENTS

GLMV Architecture
9229 Ward Parkway, Kansas City, MO 64114
Tel: (816) 444-4200
www.glmv.com
GLMV Architecture, Inc

KH ENGINEERING GROUP, P.A.
15377 West 95th Street, Lenexa, KS 66219
Tel: (913) 825-9381
KH Engineering Group, PA
MO State Certificate of Authority #2004032065

OFFICE OF ADJUTANT GENERAL
DIVISION OF FACILITIES MANAGEMENT, DESIGN AND CONSTRUCTION
DEPARTMENT OF PUBLIC SAFETY
Missouri Army National Guard

Camp Clark Training Site

18159 South K Highway
Nevada, Missouri 64772

FITNESS CENTER - STORM SHELTER

PROJECT # T1930-01
SITE # 6275
ASSET # 8136274078

REVISION:
DATE:
REVISION:
DATE:
REVISION:
DATE:
ISSUE DATE: 07/02/2020

CAD DWG FILE: T1930-01_6275_8136274078_S-002.DWG

DRAWN BY: GLB
CHECKED BY: KJH
DESIGNED BY: KHE

SHEET TITLE:
GENERAL NOTES, ABBREVATIONS, MISCELLANEOUS

SHEET NUMBER:
S-002

PLAN NOTES:

1. 8" CONCRETE SLAB-ON-GRADE w/ #4 @ 12" OC EW, CENTERED IN SLAB, OVER 15 MIL VAPOR RETARDER OVER 4" OF FREE-DRAINING GRANULAR MATERIAL AND 1'-8" OF LOW PLASTICITY STRUCTURAL FILL AS DEFINED IN THE GEOTECHNICAL REPORT. T/CONC = EL 100'-0" (CIVIL ELEVATION 892.00')
2. 12" CMU WALL W/ (2) #5 @ 8" ON CENTER, ONE EACH FACE, EACH CELL (UNO). PROVIDE HORIZONTAL BOND BEAMS PER S-201 WALL ELEVATIONS.
3. MASONRY CONTROL JOINT (MJ). RE: ARCH
4. CONCRETE SIDEWALK PER CIVIL.
5. FLOOR DRAINS NOT SHOWN. LOCATE PER P-101 (TYP).
6. FLOOR ELECTRICAL BOXES NOT SHOWN. LOCATE PER E-101 (TYP).
7. CONTROL JOINT (CJ) PER 3/S-301.
8. RECESS FLOOR AT SHOWERS PER ARCHITECTURAL/PLUMBING (TYP).
9. SLEEVE FOOTING AT UTILITIES PER 4/S-301.
10. COILING SHUTTER SUPPORT PER 5/S-301 AT EACH WINDOW.

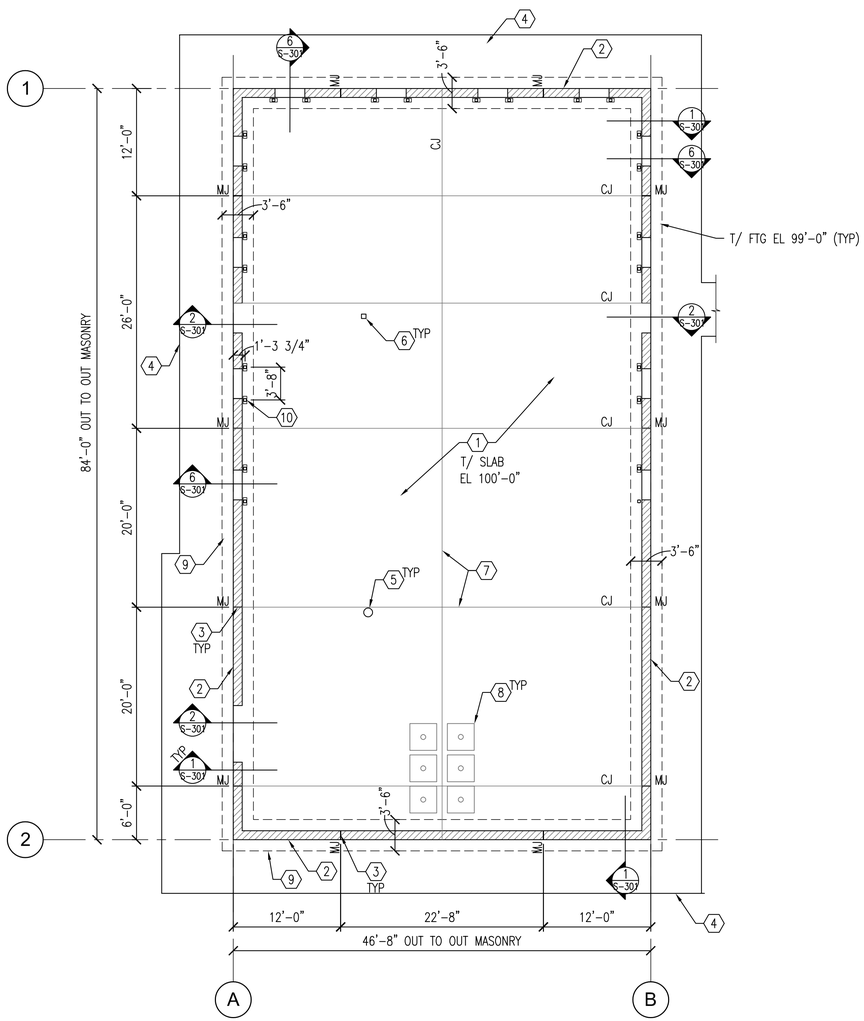

1 FOUNDATION PLAN

0' 4' 8' 12' 1/8" = 1'-0"

TRUE NORTH PLAN NORTH

PLAN NOTES:

11. 6" NORMAL WEIGHT CONCRETE SLAB ON 2" VLI, 18 GUAGE GALVANIZED COMPOSITE DECK (8" TOTAL). REINFORCE SLAB w/ #5 @ 16" ON CENTER EACH WAY, CENTERED IN SLAB. T/CONC = EL 114'-0".
12. CAMBER ALL BEAMS 1" AND PROVIDE 3/4"ø x 7" HEADED ANCHOR STUDS @ 12" ON CENTER THROUGH DECK TO TOP OF BEAM (TYP).
13. 8" CMU PARAPET WALL ABOVE SLAB (NOT SHOWN). REINFORCE W/ (2) #5 @ 8" ON CENTER, ONE EACH FACE, EACH CELL (UNO). CONTINUE OUTER LAYER OF REINFORCING FROM WALL BELOW AND ADD #⅝ VERTS ABOVE 10'-8" PER 8/S-301. PROVIDE HORIZONTAL BOND BEAMS PER S-201 WALL ELEVATIONS.
14. W21X44 [4] w/ (6) 3/4"ø BOLTS TO FULL DEPTH STIFFENER EACH END.
15. L4X4X3/8 BETWEEN BEAMS AT BOTTOM FLANGE AT MID-SPAN (TYP).
16. C8 BETWEEN BEAMS PER 9/S-301.
17. HSS2x2 & L6x6 PER 10/S-301.
18. HSS4x4x1/4 BETWEEN BEAMS AT BOTTOM FLANGE FOR MAS WALL BRACE.

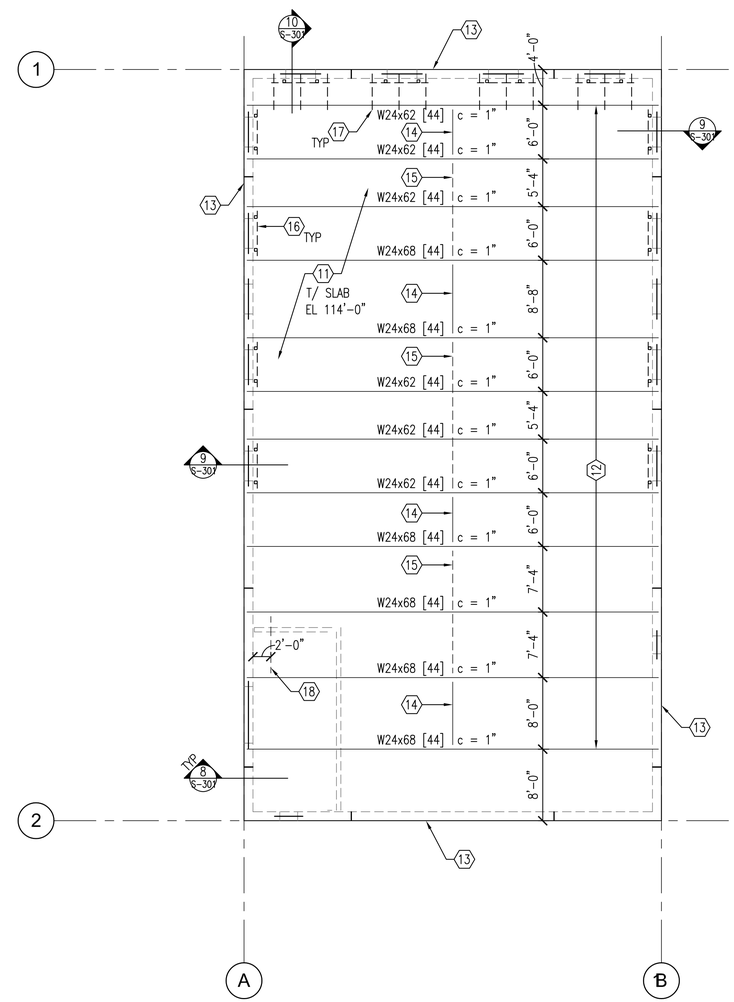

2 ROOF FRAMING PLAN

0' 4' 8' 12' 1/8" = 1'-0"

STATE OF MISSOURI
MIKE PARSON, GOVERNOR

STATE OF MISSOURI
KATHLEEN A. HAGEN
NUMBER
E-2000155328
REGISTERED PROFESSIONAL ENGINEER
6-26-20

BID DOCUMENTS

GLMVArchitecture
9229 Ward Parkway, Kansas City, MO 64114
Tel: (816) 444-4200
www.glmv.com
GLMV Architecture, Inc

KH ENGINEERING GROUP, P.A.
15377 West 95th Street, Lenexa, KS 66219
Tel: (913) 825-9381

KH Engineering Group, PA
MO State Certificate of Authority #2004032065

OFFICE OF ADJUTANT GENERAL
DIVISION OF FACILITIES MANAGEMENT, DESIGN AND CONSTRUCTION
DEPARTMENT OF PUBLIC SAFETY
Missouri Army National Guard

Camp Clark Training Site

18159 South K Highway
Nevada, Missouri 64772

FITNESS CENTER - STORM SHELTER

PROJECT # T1930-01
SITE # 6275
ASSET # 8136274078

REVISION:
DATE:
REVISION:
DATE:
REVISION:
DATE:
ISSUE DATE: 07/02/2020

CAD DWG FILE: T1930-01_6275_8136274078_S-101.DWG

DRAWN BY: GLB
CHECKED BY: KJH
DESIGNED BY: KHE

SHEET TITLE:

FOUNDATION & ROOF PLANS

SHEET NUMBER:

S-101

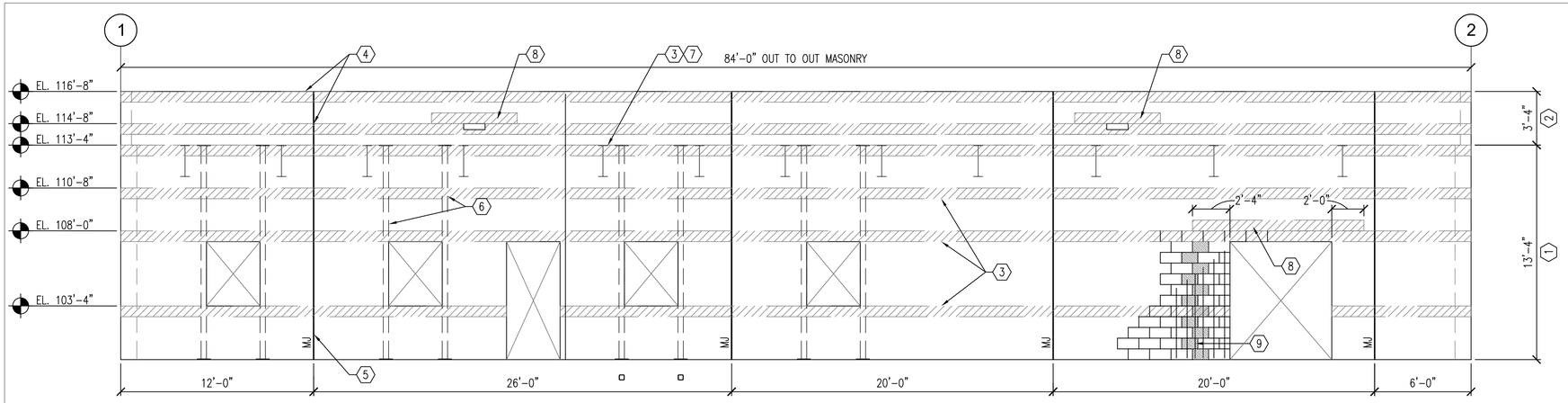

ELEVATION NOTES:

1. 12" CMU WALL. REINFORCE EACH CELL PER PLAN.
2. 8" CMU PARAPET WALL. REINFORCE EACH CELL PER PLAN AND 8/S-301.
3. 8" HIGH x 12" CMU BOND BEAM w/ (2) #5 CONT.
4. 8" HIGH X 8" CMU BOND BEAM W/ (2) #5 CONT.
5. 3/8" MAXIMUM WIDTH MASONRY CONTROL JOINT (MJ). RE: ARCH.
6. COILING SHUTTER SUPPORT PER 5/S-301 AT EACH WINDOW.
7. ROOF BEAM PER PLAN. CONTINUE BOND BEAM REINFORCING THROUGH BEAM OPENING PER DETAILS.
8. ADD 8" HIGH x 12" CMU BOND BEAM LINTEL w/ (2) #5.
9. CUT BLOCK BELOW LINTEL AS REQUIRED FOR COURSING (2'-0" NORTH OF OPENING). REINFORCE HALF CELL SECTION w/ (2) #5 VERTICALS.

NOTE – CONTROL JOINT LOCATIONS AND BOND BEAM ELEVATIONS MUST BE PROVIDED AS SHOWN FOR STORM SHELTER DESIGN.

1 WEST WALL ELEVATION

0' 2' 4' 6' 1/4" = 1'-0"

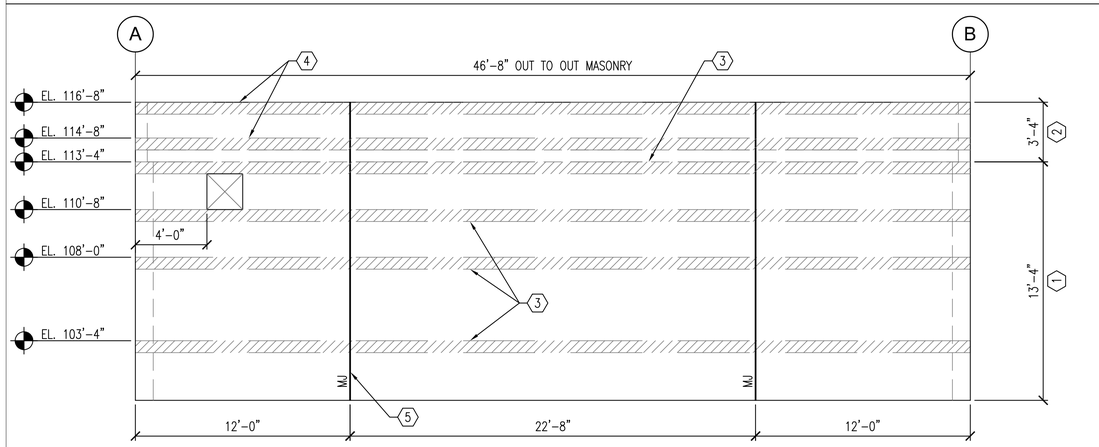

2 SOUTH WALL ELEVATION

0' 2' 4' 6' 1/4" = 1'-0"

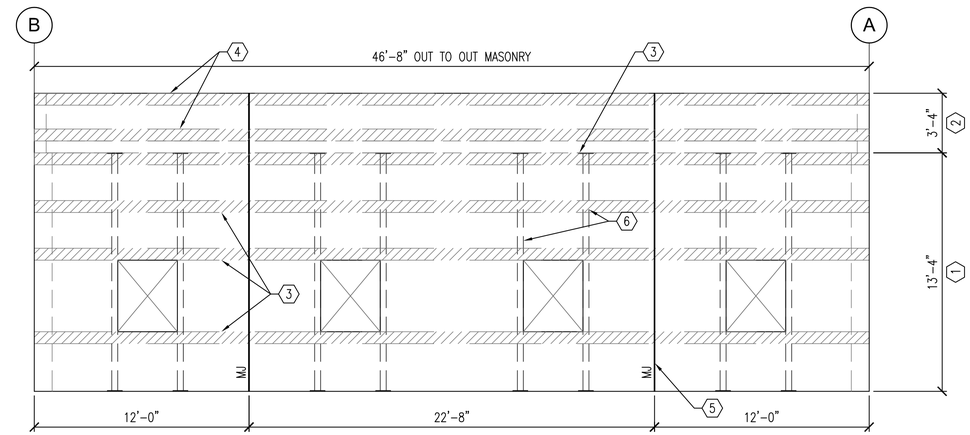

3 NORTH WALL ELEVATION

0' 2' 4' 6' 1/4" = 1'-0"

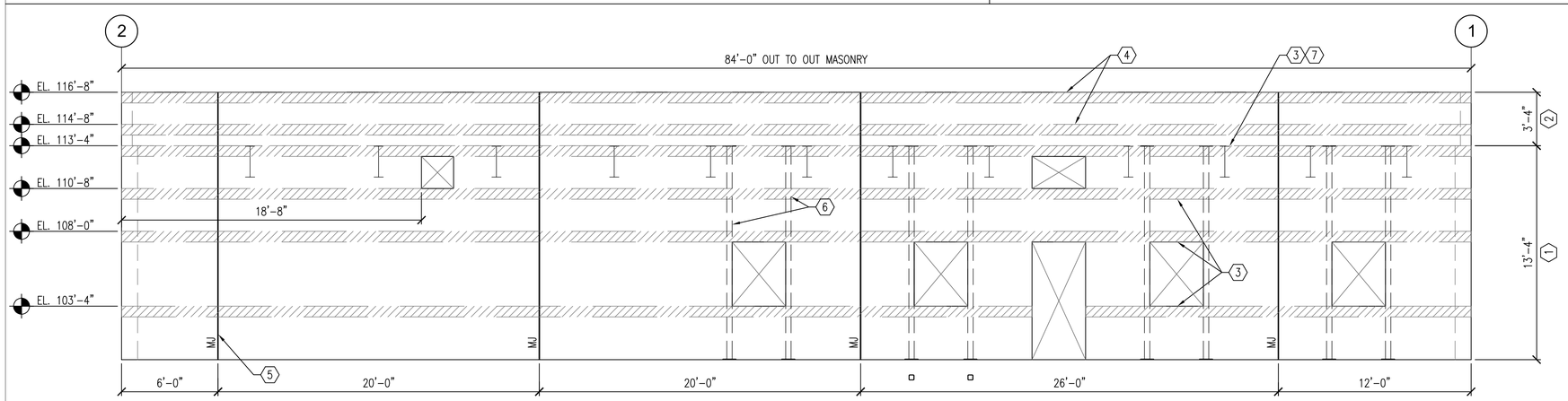

4 WEST WALL ELEVATION

0' 2' 4' 6' 1/4" = 1'-0"

STATE OF MISSOURI
MIKE PARSON,
GOVERNOR

STATE OF MISSOURI
KATHLEEN A. HAGEN
NUMBER
E-2000155328
REGISTERED PROFESSIONAL ENGINEER
6-26-20

BID DOCUMENTS

GLMVArchitecture
9229 Ward Parkway, Kansas City, MO 64114
Tel: (816) 444-4200
www.glmv.com
GLMV Architecture, Inc

KH ENGINEERING GROUP, P.A.
15377 West 95th Street, Lenexa, KS 66219
Tel: (913) 825-9381

KH Engineering Group, PA
MO State Certificate of Authority #2004032065

OFFICE OF ADJUTANT GENERAL
DIVISION OF FACILITIES MANAGEMENT, DESIGN AND CONSTRUCTION
DEPARTMENT OF PUBLIC SAFETY
Missouri Army National Guard

Camp Clark Training Site

18159 South K Highway
Nevada, Missouri 64772

FITNESS CENTER - STORM SHELTER

PROJECT # T1930-01
SITE # 6275
ASSET # 8136274078

REVISION:
DATE:
REVISION:
DATE:
REVISION:
DATE:
ISSUE DATE: 07/02/2020

CAD DWG FILE:
T1930-01_6275_8136274078_S-201.DWG

DRAWN BY: GLB
CHECKED BY: KJH
DESIGNED BY: KHE

SHEET TITLE:

EXTERIOR WALL ELEVATIONS

SHEET NUMBER:

S-201

12 OF 33 SHEETS

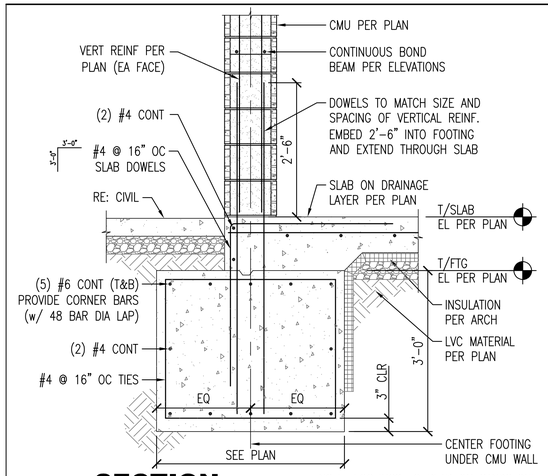

NOTE: FOOTINGS TO BEAR ON SANDSTONE PER GEOTECHNICAL REPORT. EXTEND FOOTING EXCAVATION TO SANDSTONE AS REQUIRED PER GEOTECHNICAL REPORT.

1 SECTION

0' 6" 1' 3/4" = 1'-0"

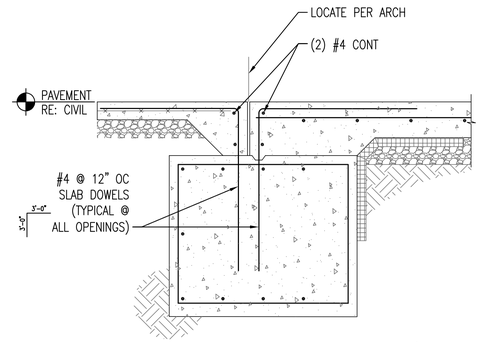

SEE SECTION 1/S-301 FOR ADDITIONAL INFORMATION

2 SECTION AT DOOR

0' 6" 1' 3/4" = 1'-0"

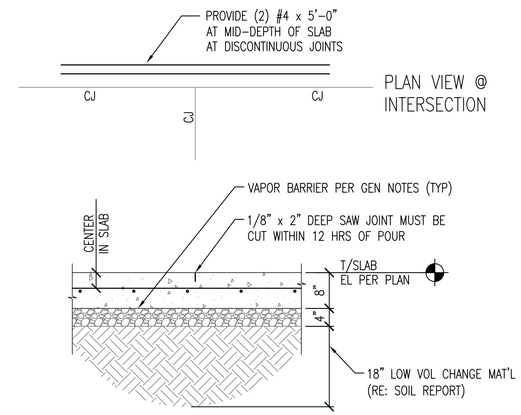

3 TYP CONTRACTION JOINT

0' 6" 1' 3/4" = 1'-0"

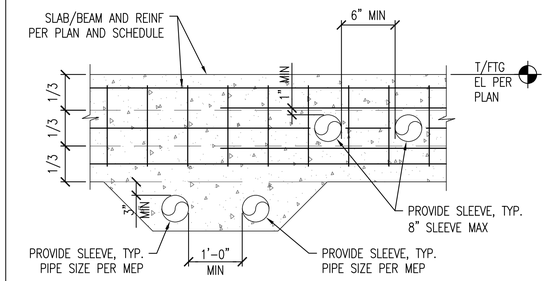

4 TYP FOUNDATION SLEEVE

0' 6" 1' 3/4" = 1'-0"

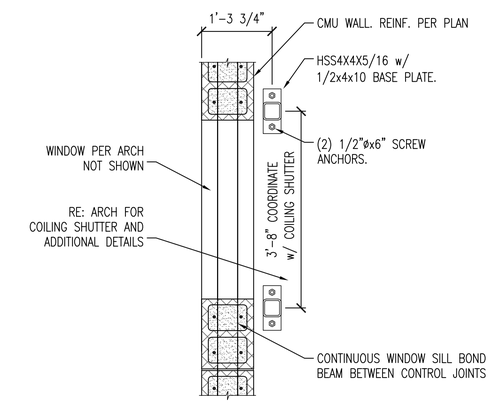

5 PLAN DETAIL AT WINDOW

0' 6" 1' 3/4" = 1'-0"

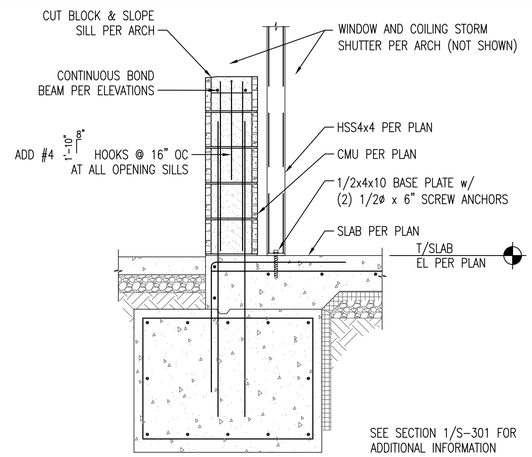

6 SECTION AT WINDOW

0' 6" 1' 3/4" = 1'-0"

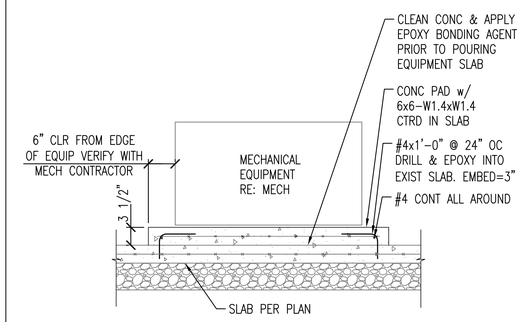

7 TYP HOUSEKEEPING PAD

NTS

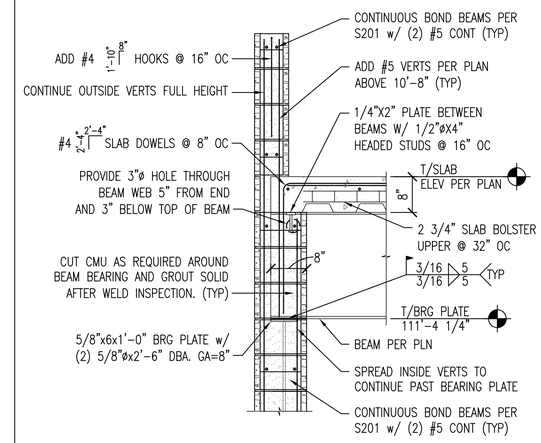

8 TYP BEAM BEARING

NTS

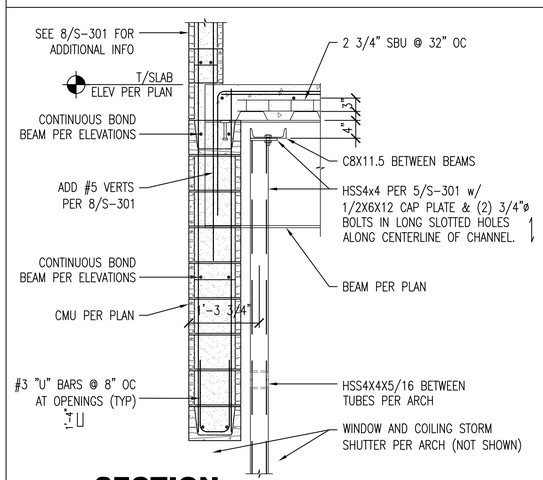

9 SECTION

0' 6" 1' 3/4" = 1'-0"

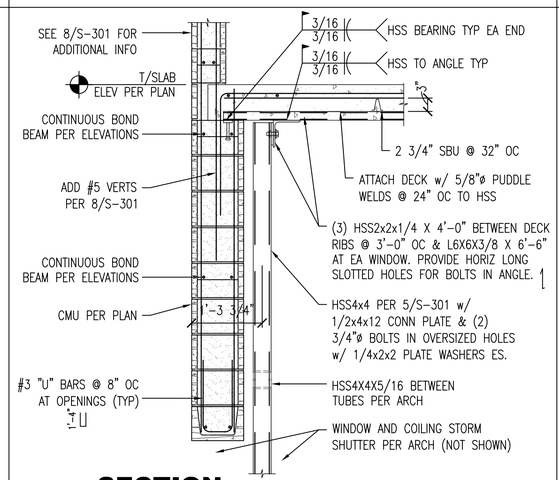

10 SECTION

0' 6" 1' 3/4" = 1'-0"

STATE OF MISSOURI
MIKE PARSON, GOVERNOR

STATE OF MISSOURI KATHLEEN A. HAGEN NUMBER E-2000155328 REGISTERED PROFESSIONAL ENGINEER 6-26-20

BID DOCUMENTS

GLMV Architecture
9229 Ward Parkway, Kansas City, MO 64114
Tel: (816) 444-4200
www.glmv.com
GLMV Architecture, Inc

KH ENGINEERING GROUP, P.A.
15377 West 95th Street, Lenexa, KS 66219
Tel: (913) 825-9381

KH Engineering Group, PA
MO State Certificate of Authority #2004032065

OFFICE OF ADJUTANT GENERAL
DIVISION OF FACILITIES MANAGEMENT, DESIGN AND CONSTRUCTION
DEPARTMENT OF PUBLIC SAFETY
Missouri Army National Guard

Camp Clark Training Site

18159 South K Highway
Nevada, Missouri 64772

FITNESS CENTER - STORM SHELTER

PROJECT # T1930-01
SITE # 6275
ASSET # 8136274078

REVISION:
DATE:
REVISION:
DATE:
REVISION:
DATE:
ISSUE DATE: 07/02/2020

CAD DWG FILE:
T1930-01_6275_8136274078_S-301.DWG

DRAWN BY: GLB
CHECKED BY: KJH
DESIGNED BY: KHE

SHEET TITLE:

SECTIONS

SHEET NUMBER:

S-301

13 OF 33 SHEETS

FITNESS CENTER - STORM SHELTER

ARCHITECTURAL LEGEND

- ADDITIONAL FILL
- CONCRETE
- GRAVEL / POROUS BACKFILL
- CONCRETE MASONRY UNITS (PLAN)
- CONCRETE MASONRY UNITS (SECTION)
- CERAMIC TILE — AS INDICATED
- QUARRY TILE — AS INDICATED
- ALUMINUM
- STONE
- WOOD (ROUGH)
- WOOD (FINISH)
- BATT INSULATION
- GYPSUM WALLBOARD — AS INDICATED
- PLASTER — AS INDICATED
- RIGID INSULATION
- RIGID INSULATION (SMALL SCALE)
- GLASS
- WOOD STUD PARTITION
- METAL STUD PARTITION
- METAL
- REINFORCING STEEL
- PLYWOOD
- STEEL PLATE- ELEVATION
- LEVELING COURSE
- LOW VOLUME CHANGE MATERIAL
- REWORKED SOIL OR OFFSITE CLAYS
- GLAZED BRICK
- FACE BRICK
- C.M.U.

ARCHITECTURAL SYMBOLS

- P1 — PARTITION TYPE
- ROOM NAME 101 — ROOM NAME & NUMBER
- 101 — DOOR NUMBER
- 1 — WINDOW TYPE (ALSO USED TO DESIGNATE MANUFACTURED WALL PANELS)
- 1 — KEYNOTE (MAY OR MAY NOT INCLUDE LEADER)
- 32 — SIGNAGE IDENTIFICATION
- 100' - 0" — SPOT ELEVATION (MAY OR MAY NOT INCLUDE LEADER)

BUILDING SECTION IDENTIFICATION

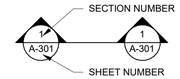

WALL SECTION IDENTIFICATION

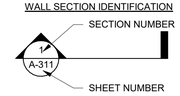

DETAIL / ENLARGED PLAN IDENTIFICATION

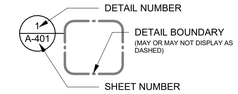

INTERIOR ELEVATION IDENTIFICATION

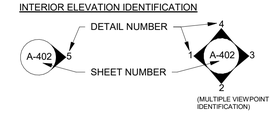

EXTERIOR ELEVATION IDENTIFICATION

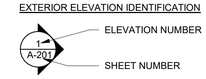

GENERAL NOTES

1. THESE NOTES ARE SUPPLEMENTAL INSTRUCTIONS TO THE CONTRACTOR AND APPLY GENERALLY TO ALL OF THE CONSTRUCTION (U.N.O.). ADDITIONAL SPECIFIC SUPPLEMENTAL INFORMATION MAY BE PROVIDED IN DRAWINGS OR WRITTEN IN THE SPECIFICATIONS, STANDARDS AND/OR CONTRACTS AND OTHER ASSOCIATED DOCUMENTS.
2. ALL CONSTRUCTION SHALL BE IN ACCORDANCE WITH THE MOST CURRENT DRAWINGS, SPECIFICATIONS AND STANDARDS AS PROVIDED BY THE ARCHITECT/ENGINEER.
3. AN APPROVED SET OF PLANS SHALL BE MAINTAINED ON THE JOB SITE AT ALL TIMES.
4. CONSTRUCTION SHALL CONFORM TO THE BEST PRACTICES OF EACH TRADE.
5. ALL CONSTRUCTION SHALL CONFORM TO THE APPLICABLE CODES AND AUTHORITIES HAVING JURISTICTION'S REQUIREMENTS.
6. THE CONTRACTOR SHALL OBTAIN THE NECESSARY PERMITS REQUIRED FOR THE PROJECT SHOWN ON THESE DRAWINGS PRIOR TO THE START OF THE CONSTRUCTION.
7. CONTRACTOR SHALL *NOT* REPRODUCE *ANY* PORTION OF A CONTRACT DRAWING FOR USE IN ANY PORTION OF A SUBMITTAL.
8. THE GENERAL CONTRACTOR IS RESPONSIBLE FOR SUPPLYING AND INSTALLING ALL COMPONENTS AND ACCESSORIES, EQUIPMENT, MATERIALS, HARDWARE AND OTHER ITEMS NECESSARY (U.N.O.) FOR A COMPLETE AND FINISHED JOB CONSISTENT WITH THE DESIGN INTENT PRESENTED IN THESE DRAWINGS.
9. ALL DIMENSIONS ARE FROM THE FACE OF STUD FRAMING, FACE OF MASONRY, FACE OF CONCRETE, FACE OF PRE-ENGINEERED METAL BUILDING WALL GIRT, OR CENTER LINE OF STRUCTURAL STEEL (U.N.O).
10. ADA DIMENSIONS ARE FROM FINISHED FACES.
11. ALL DOORS ARE LOCATED 4 INCHES FROM THE ADJACENT PERPENDICULAR STUD WALL FRAMING AND 8 INCHES FROM THE ADJACENT PERPENDICULAR CMU WALL FRAMING TO THE HINGE SIDE OF THE DOOR OPENING (U.N.O.).
12. COORDINATE THE LOCATION AND INSTALLATION OF ALL MECHANICAL AND ELECTRICAL DEVICES, REGISTERS, FIXTURES, ETC. PRIOR TO INSTALLATION OF FINISH MATERIALS.
13. PROVIDE CONTROL JOINTS ON CONTINUOUS GYPSUM BOARD SURFACES IN EXCESS OF 30-0".
14. VERIFY STUD AND/OR CHASE DEPTH AT TOILET FIXTURE LOCATIONS. ADJUST PER PLUMBING REQUIREMENTS AT NO ADD'L COST.
15. PROVIDE SEALANT IN FLOOR JOINTS OF EXPOSED FINISHES PER FLOOR COATING MANUFACTURER'S RECOMMENDATIONS.
16. SEE SHEET A-601 FOR PARTITION TYPES. SEE ENLARGED PLANS FOR ADDITIONAL PARTITION IDENTIFICATION.
17. GYPSUM BOARD PLUMBING WALLS TO RECEIVE MOLD AND MOISTURE RESISTANT GYP. BD. TO A HEIGHT OF 4'-0" A.F.F. (U.N.O.). PROVIDE MOLD AND MOISTURE RESISTANT GYP. BD. AT SHOWER AREA CEILINGS (U.N.O.).
18. DIMENSIONS TO OPENINGS (DOORS, WINDOWS, LOUVERS, ETC.) AND THEIR SIZES AT CMU WALLS ARE NOMINAL. COORDINATE OPENING SIZES AND THEIR TOLERANCES WITH ITEM(S) TO BE INSTALLED. RE: STRUCT. FOR ADDITIONAL DIMENSIONAL REQUIREMENTS AT OPENINGS.
19. THE CONTRACTOR SHALL LOCATE AND UNCOVER ALL THE UNDERGROUND UTILITIES PRIOR TO CONSTRUCTION.
20. DISPOSAL OF/AND STOCKPILING OF EXCESS MATERIAL WITHIN THE PROJECT AREA SHALL BE DONE IN SUCH A WAY THAT IT WILL NOT CREATE A NUISANCE TO THE ONGOING CONSTRUCTION IN GENERAL, OWNER'S OPERATIONS AND ADJACENT NEIGHBORING PROPERTIES.
21. THE CONTRACTOR AND HIS SUBCONTRACTORS SHALL NOT TRESPASS BEYOND THE PROJECT'S PROPERTY LINES UNLESS A PERMIT OR WRITTEN AUTHORIZATION HAS BEEN OBTAINED FROM THE RESPECTIVE NEIGHBORING PROPERTY OWNERS.
22. DAMAGE ON PUBLIC AND/OR ON THE CLIENT'S PREMISES CREATED BY THE CONSTRUCTION SHALL BE RESTORED IN ITS ORIGINAL CONDITION, WITH NO ADDITIONAL COST IMPLICATION TO THE OWNER.
23. THE CONTRACTOR SHALL CHECK AND FIELD VERIFY ALL DIMENSIONS AND FLOOR LEVELS ON SITE (BOTH NEW AND EXISTING) AND REPORT DISCREPANCIES TO THE ARCHITECT PRIOR TO PROCEEDING.
24. THE DRAWING SHALL NOT BE SCALED. ONLY WRITTEN DIMENSIONS SHALL BE FOLLOWED. THE CONTRACTOR MAY REQUEST, FROM THE ARCHITECT, DIMENSIONS NOT SHOWN ON THE DRAWINGS.
25. ARCHITECTURAL DRAWINGS SHALL BE USED IN CONJUNCTION WITH ENGINEERING DRAWINGS AND RESPECTIVE SPECIFICATIONS FOR PROPER COORDINATION. ANY DISCREPANCIES SHALL BE BROUGHT TO THE ATTENTION OF THE ARCHITECT.
26. CONTRACTOR SHALL SUBMIT SHOP DRAWINGS FOR REVIEW PRIOR TO FABRICATION WHERE REQUIRED BY ARCHITECT/ENGINEERS.

ABBREVIATIONS

A	
ABV.	ABOVE
A.F.F.	ABOVE FINISHED FLOOR
ACOUST.	ACOUSTICAL
ACT	ACOUSTICAL CEILING TILE
ADD.	ADDITION / ADDENDUM
ADJ.	ADJUSTABLE / ADJACENT
A/C	AIR CONDITIONING
ALT.	ALTERNATE
AL. / ALUM.	ALUMINUM
AWG	AMERICAN WIRE GAUGE
ADA	AMERICAN WITH DISABILITIES ACT
A.B.	ANCHOR BOLT
A.B.	ANCHOR BOLT
APPROX.	APPROXIMATE
ARCH.	ARCHITECT / ARCHITECURAL
ASPH.	ASPHALT
AUTO.	AUTOMATIC
AVG.	AVERAGE
B	
BSMT.	BASEMENT
BM.	BEAM
BRG.	BEARING
B.M.	BENCH MARK
BTWN.	BETWEEN
BLK.	BLOCK
BLKG.	BLOCKING
BD.	BOARD
B.O.	BOTTOM OF
BRZ	BRONZE
BLDG.	BUILDING
B.U.	BUILT-UP
C	
CAB.	CABINET
CPT	CARPET
C.I.P.	CAST IN PLACE
CLG.	CEILING
C	CENTER LINE
CT	CERAMIC TILE
C.O.	CLEAN OUT
CLR.	CLEAR / CLEARANCE
CLO.	CLOSET
COL.	COLUMN
COMB.	COMBINATION
CONC.	CONCRETE
CMU	CONCRETE MASONRY UNIT
COND.	CONDITION / CONDENSER
CONF.	CONFERENCE
CONST.	CONSTRUCTION
CD	CONSTRUCTION DOCUMENT(S)
CONT.	CONTINUAL / CONTINUOUS
CONTR.	CONTRACTOR
C.J.	CONTROL / CONSTRUCTION JOINT
CU	COPPER
CORR.	CORRIDOR
CU. FT.	CUBIC FEET
CFM	CUBIC FEET PER MINUTE
CU. YD.	CUBIC YARD
D	
DK.	DARK
D.	DEEP / DEPTH
DEMO	DEMOLITION
DTL.	DETAIL
DIAG.	DIAGONAL / DIAGONALLY
DIA.	DIAMETER
DIM.	DIMENSION
D.W.	DISH WASHER
DISP.	DISPENSER / DISPLAY
DIV.	DIVIDE
DOC.	DOCUMENT(S) / DOCUMENTED
DR.	DOOR
DBL.	DOUBLE
DN.	DOWN
DS.	DOWNSPOUT
DWG.	DRAWING
D.F.	DRINKING FOUNTAIN
d	PENNY
E	
EA.	EACH
E.W.	EACH WAY
E.	EAST
ELECT. / ELEC.	ELECTRICAL
EL.	ELEVATION
ELEV.	ELEVATOR
ENCL.	ENCLOSE / ENCLOSED / ENCLOSURE
EQ.	EQUAL
EQUIP.	EQUIPMENT
EST.	ESTIMATE
EXIST.	EXISTING
EXP.	EXPANSION / EXPOSED
E.J.	EXPANSION JOINT
EXT.	EXTERIOR
E.I.F.S.	EXTERIOR INSULATED FINISH SYSTEM
F	
FAB.	FABRICATE / FABRICATION
F.O.W.	FAC OF WALL
F.M.	FACTORY MUTUAL
FT.	FEET / FOOT
F.V.	FIELD VERIFY
FIN.	FINISHED / FINISH
F.A.	FIRE ALARM
FACP	FIRE ALARM CONTROL PANEL
F.E.B.	FIRE EXTINGUISHER BRACKET
F.E.C.	FIRE EXTINGUISHER CABINET
F.H.	FIRE HYDRANT
F.P.	FIRE PROTECTION / FIRE PROOF / FIRE PROOFING
F.R.	FIRE-RATED
FLR.	FLOOR
F.D.	FLOOR DRAIN
FLG.	FLOORING
FLUOR.	FLUORESCENT
FTG.	FOOTING
FDN.	FOUNDATION
FURN.	FURNITURE / FURNISH
FUT.	FUTURE
G	
GALV.	GALVANIZED / GALVALUME
GA.	GAUGE
G.C.	GENERAL CONTRACTOR
GL.	GLASS
GLAZ.	GLAZING
GOVT.	GOVERNMENT
G.B.	GRAB BAR
GYP.	GYPSUM
H	
HDW	HARDWARE
HDWD.	HARDWOOD
HTG.	HEATING
HVAC	HEATING, VENTILATING & AIR CONDITIONING
HVY.	HEAVY
HT.	HEIGHT
H.	HIGH
H.C.	HOLLOW CORE
HM	HOLLOW METAL
HORZ. / HOR.	HORIZONTAL
H.W.	HOT WATER HEATER
HR.	HOUR
I	
ID	IDENTIFICATION
IN.	INCH / INCHES
INCL.	INCLUDE / INCLUDED
I.D.	INSIDE DIAMETER
INST.	INSTRUCTIONS / INSTALL / INSTALLATION
INSUL.	INSULATION / INSULATED
INT.	INTERIOR
J	
JAN.	JANITOR
JT.	JOINT
JST.	JOIST
JCT.	JUNCTION
K	
KIT.	KITCHEN
L	
LAM.	LAMINATE
LVL	LAMINATED VENEER LUMBER
LAT.	LATERAL
LAV.	LAVATORY
L.H.	LEFT HAND
LT.	LIGHT
LED	LIGHT EMITTING DIODE
LTG.	LIGHTING
LIN.	LINE / LINEAR
L.F.	LINEAR FEET
LINO	LINOLEUM
LOC.	LOCATION / LOCATE
LG.	LONG/LENGTH
LB.	POUND / POUNDS
M	
M.H.	MANHOLE
MFR.	MANUFACTURED / MANUFACTURER
MFG.	MANUFACTURING
MAS.	MASONRY
M.O.	MASONRY OPENING
MATL.	MATERIAL
MAX.	MAXIMUM
MECH.	MECHANICAL
MED.	MEDIUM
MEMB.	MEMBRANE
MTL.	METAL
M.	METER(S)
MM.	MILLIMETER(S)
MIN.	MINIMUM
MIR.	MIRROR
MISC.	MISCELLANEOUS
MOD.	MODULAR / MODIFY
MTD.	MOUNTED
MULT.	MULTIPLE
N	
NRC	NOISE REDUCTION COEFFICIENT
NOM.	NOMINAL
N.	NORTH
N/A	NOT APPLICABLE
N.I.C.	NOT IN CONTRACT
N.T.S.	NOT TO SCALE
NO.	NUMBER
O	
OCC.	OCCUPANT / OCCUPANCY
O.C.	ON-CENTER
OPNG.	OPENING
OPP.	OPPOSITE
O.D.	OVERALL / OUTSIDE DIMENSION
O.H.	OVERHEAD / OVERHANG
P	
PT.	PAINT
PTD.	PAINTED
PR.	PAIR
PTN. / PART.	PARTITION
PVMT.	PAVEMENT
PERF.	PERFORATED
PERIM.	PERIMETER
PERM.	PERMANENT
PERP.	PERPENDICULAR
PH.	PHASE / PHASED
PLAS.	PLASTIC
PLAM	PLASTIC LAMINATE
PLMG. / PLUMB.	PLUMBING
PLYWD.	PLYWOOD
PVC	POLYVINYL CHLORIDE
PORC.	PORCELAIN
P.C.F.	POUNDS PER CUBIC FOOT
P.L.F.	POUNDS PER LINEAR FOOT
P.S.F.	POUNDS PER SQUARE FOOT
P.S.I.	POUNDS PER SQUARE INCH
PWR.	POWER
P.C.	PRE CAST
PRE-ENG.	PRE-ENGINEERED
PRE-FIN.	PRE-FINISHED
PROJ.	PROJECT / PROJECTION
PL	PROPERTY LINE
Q	
QTY.	QUANTITY
QT	QUARRY TILE
R	
R	RADIUS / RISER(S)
RECEPT.	RECEPTION
RE:	REFERENCE
RCP	REFLECTED CEILING PLAN
REF.	REFRIGERATOR
REG.	REGULATION / REGISTERED
REINF.	REINFORCED / REINFORCEMENT
RMV.	REMOVE
REQD.	REQUIRED
RET.	RETURN
RA	RETURN AIR
REV.	REVERSE / REVERSED / REVISED / REVISION
R.H.	RIGHT HAND
R.O.W.	RIGHT OF WAY
RTU	ROOF TOP UNIT
RM.	ROOM
R.O.	ROUGH OPENING
R.S.	ROUGH SAWN
RB	RUBBER / RESILIENT BASE
S	
SAN.	SANITARY
S.S.	SANITARY SEWER / SERIVCE SINK / STAINLESS STEEL
SCHED.	SCHEDULE
SCRN.	SCREEN / SCREENED
SECT.	SECTION
SHTG.	SHEATHING
SHT.	SHEET
SIM.	SIMILAR
SC.	SOLID CORE
SCWD.	SOLID CORE WOOD DOOR
SSM	SOLID SURFACE MATERIAL
STC	SOUND TRANSMISSION CLASS
S.	SOUTH
SPKR.	SPEAKER
SPEC.	SPECIFICATION(S)
SQ.	SQUARE
S.F. / SF	SQUARE FEET
SQ. IN.	SQUARE INCH
SQ. YD.	SQUARE YARD
S.&V.	STAIN AND VARNISH
STD.	STANDARD
STL.	STEEL
SL	STEEL LINE
STOR.	STORAGE
SD	STORM DRAIN / SMOKE DETECTOR / SUPPLY DUCT / SOAP DISPENSER
ST.	STREET
STRUCT.	STRUCTURAL / STRUCTURE
SUSP.	SUSPENDED
SYM.	SYMMETIRCAL
SYS.	SYSTEM
T	
TEL.	TELEPHONE
TV	TELEVISION
TEMP.	TEMPORARY / TEMPERATURE
THK.	THICK
THRU	THROUGH
TOIL.	TOILET
T.&G.	TONGUE AND GROOVE
T.&B.	TOP AND BOTTOM
T.O.	TOP OF
T.O.C.	TOP OF CURB
T.O.W.	TOP OF WALL
TS.	TRANSITION STRIP / TUBE STEEL
T.	TREAD(S)
TYP.	TYPICAL
U	
U.N.O.	UNLESS NOTED OTHERWISE
V	
V.B.	VAPOR BARRIER
VTR	VENT THROUGH ROOF
VERT. / VER.	VERTICAL
VEST.	VESTIBULE
VCT	VINYL COMPOSITION TILE
W	
W.C.	WATER CLOSET
WP	WEATHERPROOF
WT.	WEIGHT
W.W.F.	WELDED WIRE FABRIC
W.W.M.	WELDED WIRE MESH
W.	WEST / WIDE / WIDTH
WIN.	WINDOW
W/	WITH
W/O	WITHOUT
WD.	WOOD
WB	WOOD BASE
X	
XFER	TRANSFORMER
X	TYPE X
Y	
YD.	YARD
Z	

STATE OF MISSOURI
MIKE PARSON,
GOVERNOR

STATE OF MISSOURI
RYAN P. KREMER
NUMBER A-2016015514
07/02/2020
ARCHITECT

BID DOCUMENTS

GLMVArchitecture
9229 Ward Parkway, Kansas City, MO 64114
Tel: (816) 444-4200
www.glmv.com
GLMV Architecture, Inc
MO State Certificate of Authority #F00364807
Corporate State of MO Licensee #000305

OFFICE OF ADJUTANT GENERAL
DIVISION OF FACILITIES MANAGEMENT, DESIGN AND CONSTRUCTION
DEPARTMENT OF PUBLIC SAFETY
Missouri Army National Guard

Camp Clark Training Site

18159 South K Highway
Nevada, Missouri 64772

FITNESS CENTER - STORM SHELTER

PROJECT # T1930-01
SITE # 6275
ASSET # 8136274078

REVISION:
DATE:
REVISION:
DATE:
REVISION:
DATE:
ISSUE DATE: 07/02/2020

CAD DWG FILE:

DRAWN BY: JSP
CHECKED BY: RPK
DESIGNED BY: GLMV

SHEET TITLE:
SYMBOLS, ABBREVIATIONS & NOTES

SHEET NUMBER:
A-001

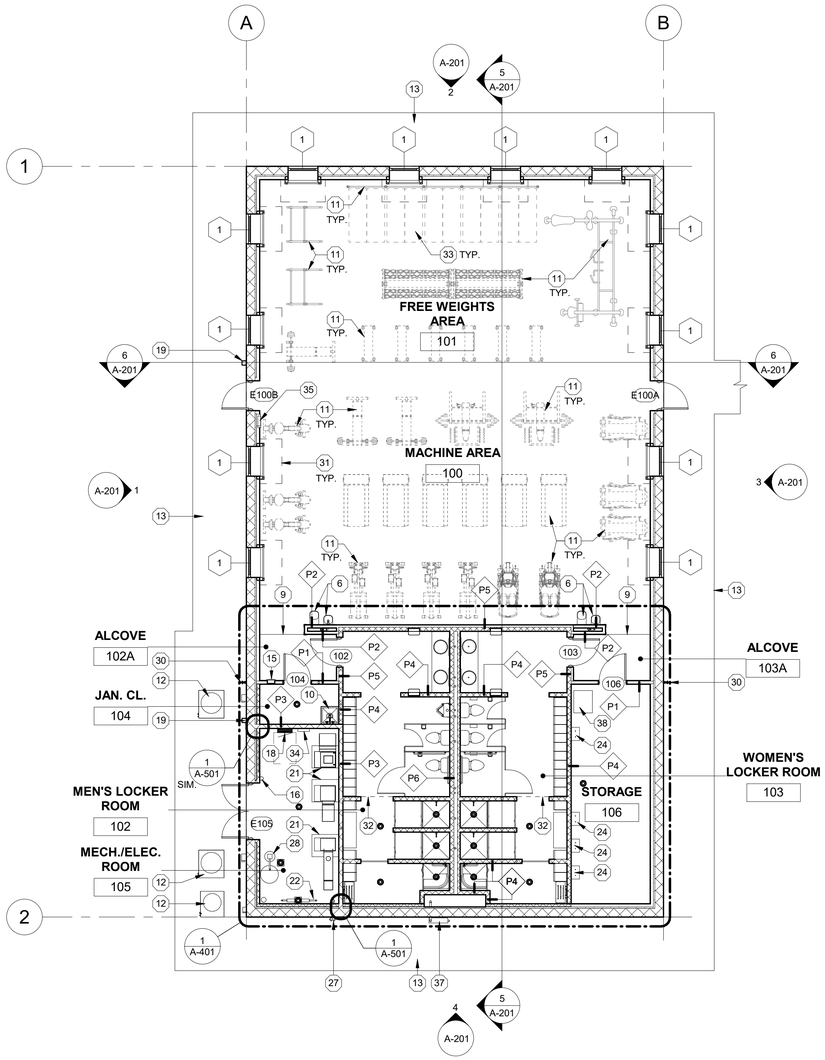

1 FLOOR PLAN

0' 4' 8' 12'
1/8" = 1'-0"
NORTH
PLAN TRUE

FLR. PLAN KEYNOTE LEGEND

(KEYNOTES DO NOT NECESSARILY APPEAR ON ALL SHEETS)

1. SINGLE TIER STEEL LOCKER (RE: INT. ELEVATIONS)
2. DOUBLE TIER STEEL LOCKERS (TYP. U.N.O.)
3. ADA COMPLIANT LAVATORY (RE: PLMG.)
4. ADA COMPLIANT TOILET (RE: PLMG.)
5. ADA COMPLIANT URINAL (RE: PLMG.)
6. ADA COMPLIANT DRINKING FOUNTAINS (RE: PLMG.)
7. TOILET (RE: PLMG.)
8. CHANGING BENCH
9. ADA COMPLIANT TRANSITION STRIP (RE: DTL. 4/I-101)
10. JANITOR'S SINK (RE: DTLS. 2/A-401, 3/A-401 & PLMG.)
11. FITNESS EQUIPMENT (RE: EQUIPMENT PLAN, 1/I-101)
12. CONDENSER UNIT (RE: MECH.)
13. REINF. CONC. SIDEWALK (RE: CIVIL)
14. CMU CONTROL JT. LOCATION (RE: 2/A-601)
15. FIRE EXTINGUISHER W/ SEMI-RECESSED CABINET (RE: 9/A-501)
16. WALL-MOUNTED FIRE EXTINGUISHER (MOUNTED PER ADA REQMTS.)
17. CORNER GUARD (RE: FINISH LEGEND & DTL. 2/I-101)
18. ELECTRICAL PANEL AND REQUIRED CLEARANCES (RE: ELECT.)
19. RUN DOWN SPOUT TO BOOT AND UNDERGROUND TO DAYLIGHT (RE: CIVIL)
20. FLOOR DRAIN (RE: PLMG. & RE: 3/I-101)
21. CONCRETE HOUSEKEEPING PADS (RE: STRUCT.)
22. DOMESTIC WATER BACKFLOW PREVENTER (RE: PLMG.)
23. FIRE DEPARTMENT ENTRY AND RISER (RE: PLMG.)
24. INSTANT WATER HEATER (RE: PLMG. & ELECT.)
25. CT CABINET (RE: ELECT.)
26. CONDENSER UNIT DISCONNECT (RE: ELECT.)
27. FIRE DEPARTMENT CONNECTION (RE: PLMG.)
28. WATER SOFTENER COMPONENTS (RE: PLMG.)
29. HVAC UNITS AND ADJACENT DUCTWORK (RE: MECH.)
30. OUTDOOR HOSE BIB / WATER HYDRANT (RE: PLMG.)
31. TORNADO-RESISTANT STEEL OVERHEAD COILING DOOR (MOTOR & CASING ABOVE SHOWN DASHED)
32. RE: ALTERNATE #2 - SHOWER AREA LIMIT (RE: SHEET I-101, INTERIOR NOTES)
33. YOGA MATS (BY OTHERS)
34. FIRE ALARM PANEL (RE: ELECT.)
35. FIRE ALARM ANNUNCIATOR PANEL (RE: ELECT.)
36. FIRE-TREATED PLYWD. PANELBOARD (RE: ELECT.)
37. GAS METER (RE: PLMG.)
38. INVERTER (RE: ELECT.)
39. SLOPED SHOWER BASIN (RE: 6/A-501, BASE BID SIM.)

FLOOR PLAN LEGEND

FOR EXTERIOR WALL CONSTRUCTION (RE: STRUCT., WALL SECTIONS & DETAILS FOR ALL CONSTRUCTION COMPONENTS NOT NOTED BELOW):

- 12" REINF. CMU WITH 4" CMU VENEER LOCATED ON INTERIOR SIDE (VENEER FULL HT. U.N.O.)
- 12" REINF. CMU WITH 3 5/8" METAL STUDS (W/ FINISHED GYP. BD.) LOCATED ON INTERIOR SIDE (FURRED WALL FULL HT. U.N.O.)

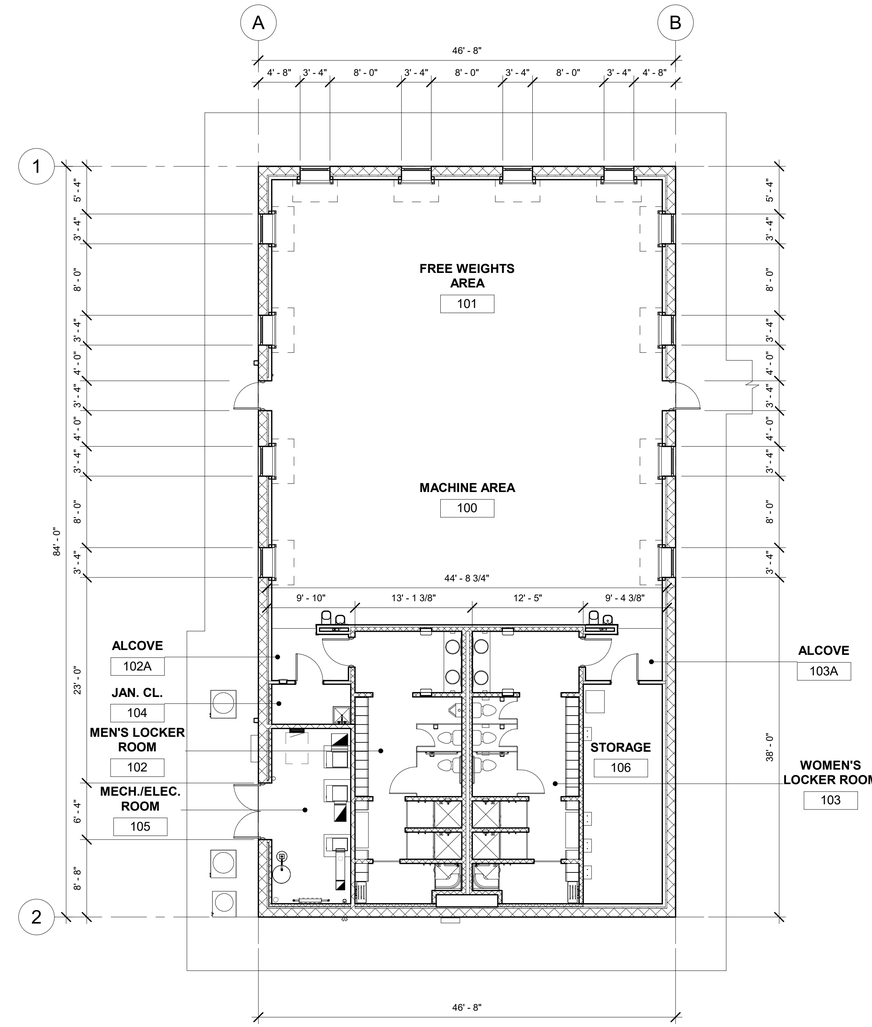

2 DIMENSION PLAN

0' 4' 8' 12'
1/8" = 1'-0"
NORTH
PLAN TRUE

DIMENSION NOTES

1. COLUMN LINES HAVE BEEN PROVIDED AND LOCATED ALONG THE EXTERIOR FACE OF THE MASONRY WALL CONSTRUCTION.
2. SEE ENLARGED PLANS AND PLAN DETAILS FOR ADDITIONAL INFORMATION INCLUDING DIMENSIONS NOT SHOWN.

ARCH. FIN. FLR. 100' - 0" = 892.00 CIVIL

BID DOCUMENTS 07/02/2020

STATE OF MISSOURI
MIKE PARSON,
GOVERNOR

STATE OF MISSOURI
RYAN P. KREMER
NUMBER A-2016015514
07/02/2020
ARCHITECT

BID DOCUMENTS

GLMVArchitecture
9229 Ward Parkway, Kansas City, MO 64114
Tel: (816) 444-4200
www.glmv.com
GLMV Architecture, Inc
MO State Certificate of Authority #F00364807
Corporate State of MO Licensee #000305

OFFICE OF ADJUTANT GENERAL
DIVISION OF FACILITIES MANAGEMENT, DESIGN AND CONSTRUCTION
DEPARTMENT OF PUBLIC SAFETY
Missouri Army National Guard

Camp Clark Training Site

18159 South K Highway
Nevada, Missouri 64772

FITNESS CENTER - STORM SHELTER

PROJECT # T1930-01
SITE # 6275
ASSET # 8136274078

REVISION:
DATE:
REVISION:
DATE:
REVISION:
DATE:
ISSUE DATE: 07/02/2020

CAD DWG FILE:

DRAWN BY: JSP
CHECKED BY: RPK
DESIGNED BY: GLMV

SHEET TITLE:

FLOOR & DIMENSION PLANS

SHEET NUMBER:

A-101

GENERAL ROOF NOTES

1. SEE PLUMBING AND MECHANICAL DRAWINGS FOR ROOF PENETRATIONS (IF ANY) INCLUDING BUT NOT LIMITED TO VENT PIPES AND FLUES.
2. PENETRATIONS THROUGH ROOF INCLUDING FLASHING DEVICES FOR EQUIPMENT AND PIPE CURBS MUST BE APPROVED BY THE INSTALLED SINGLE-PLY MEMBRANE ROOF SYSTEM MANUFACTURER AND COMPLY WITH THE ROOF SYSTEM MANUFACTURER'S PROVISIONS AND REQUIREMENTS REGARDING ROOF PENETRATIONS FOR A WATER TIGHT CONDITION AND SPECIFICED WARRANTIES.
3. IF PENETRATIONS OF SINGLE-PLY MEMBRANE ROOF IS UNAVOIDABLE, MAKE PROVISIONS TO REDUCE THE NUMBER OF PENETRATIONS TO AS FEW AS POSSIBLE.
4. NIGHT-SEALS OR CUT-OFFS USED ON THE PROJECT SHALL FLASH THE ROOF SYSTEM DOWN TO THE DECK TO PREVENT WATER PENETRATION INTO THE NEW ROOF.

ROOF KEYNOTE LEGEND

1. SINGLE-PLY MEMBRANE ROOF WITH COVER BOARD ON TAPERED INSULATION OR COMPOSITE SYSTEM OF THE SAME (RE: SPEC.)
2. TAPERED INSULATION CRICKET
3. 20" HT. x 20" W. x 12" DP. PRE-FIN. METAL CONDUCTOR HEAD
4. 4 3/8" HT. x 1'-4" W. PRE-FIN. METAL THRU-WALL SCUPPER
5. PRE-FIN. METAL PARAPET CAP FLASHING

WIND UPLIFT ZONES (RE: DETAILS & SPEC.)

6.1 ZONE 1 (ROOF AREA FIELD)
6.2 ZONE 2 (ROOF AREA PERIMETER)
6.3 ZONE 3 (ROOF CORNERS) - ENHANCED WIND UPLIFT ZONE
7 TOP-OF-INSULATION ELEVATIONS SHOWN ARE FROM FINISHED FLOOR

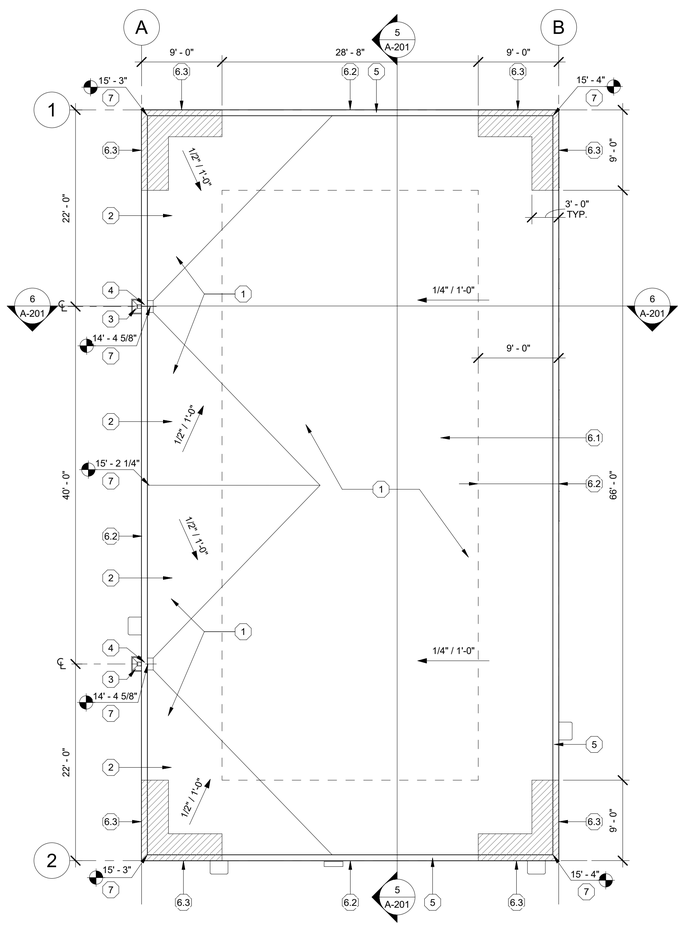

1 ROOF PLAN

0' 4' 8' 12' 1/8" = 1'-0"

NORTH PLAN TRUE

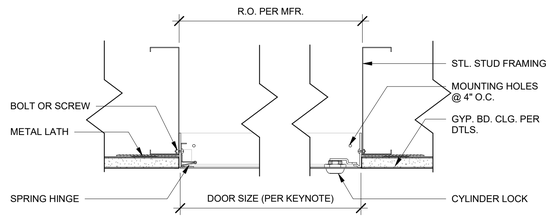

2 CEILING ACCESS DOOR DTL.

0' 1" 2" 3" 6" 3" = 1'-0"

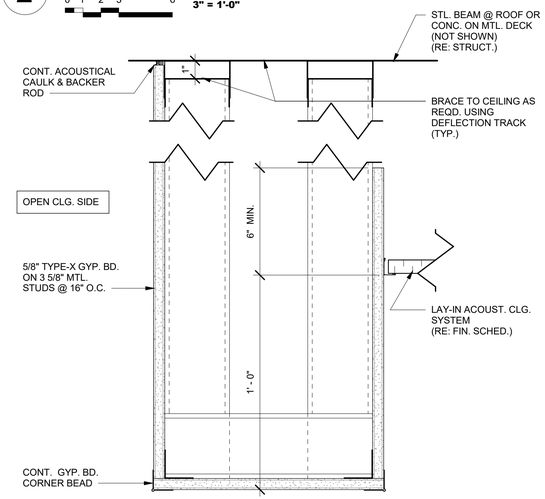

3 GYP. BD. HEADER DTL.

0' 1" 2" 3" 6" 3" = 1'-0"

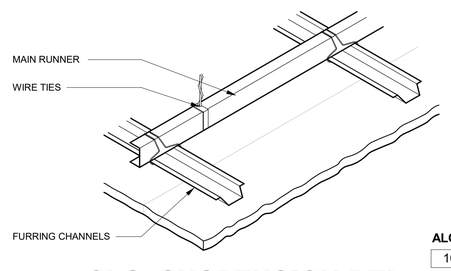

4 CLG. SUSPENSION DTL.

0' 1" 2" 3" 6" 3" = 1'-0"

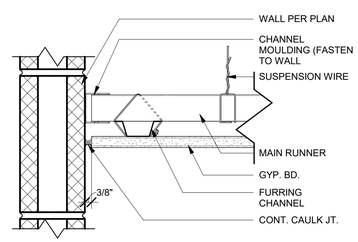

5 PERIMETER GYP. BD. CLG. DTL.

0' 1" 2" 3" 6" 3" = 1'-0"

REFLECTED CLG. PLAN GENERAL NOTES

1. REFERENCE ELECTRICAL AND MECHANICAL DRAWINGS FOR FINAL FIXTURE LOCATIONS AND QUANTITIES. ARCHITECTURAL CEILING PLANS ARE INTENDED TO SHOW FIXTURE LOCATIONS IN CEILING GRID AND CEILINGS AND SHOULD NOT BE USED TO DETERMINE ELECTRICAL AND MECHANICAL REQUIREMENTS.
2. REFERENCE FINISH SCHEDULE FOR ADDITIONAL INFORMATION.
3. PROVIDE PERIMETER RELIEF ALONG ALL SUSPENDED GYPSUM BOARD CEILING SYSTEMS (RE: DTL. 5/A-111).

REFLECTED CLG. PLAN KEY NOTES

A. 24"x24" ACCESS PANEL (PTD.):
   1. PROVIDE ACCESS PANELS FOR ALL VALVES AND DAMPERS CONCEALED ABOVE GYPSUM BOARD CEILING REQUIRING ACCESS (RE: DTL. 2/A-111).
   2. COORDINATE WITH PLUMBING AND MECHANICAL FOR PLACEMENT AT ACTUAL LOCATIONS.
B. TORNADO-RESISTANT OVERHEAD COILING DOOR AND HOOD (PT. ENTIRE GALV. STL. HOOD SAME COLOR AS CLG. - NO CLG. PT. LINE)
C. EXPOSED CEILING ELEMENTS TO BE PAINTED (E.G. STRUCTURE, CONDUIT, PIPES, DUCTWORK, ETC.). PRE-FINISHED ITEMS MATCHING CEILING COLOR ARE NOT REQUIRED TO BE PAINTED. DO NOT PAINT ITEMS REQUIRING IDENTIFICATION VIA LABEL (E.G. FIRE-RATINGS), FIRE ALARM DEVICES OR OTHER ITEMS IF PAINTING POSES AN ELEVATED RISK TO PUBLIC SAFETY, HEALTH AND WELFARE. IF UNCLEAR, NOTIFY ARCHITECT FOR DETERMINATION.
D. DUCTWORK - PTD. (RE: MECH.)
E. STL. STRUCTURE - PTD. (RE: STRUCT.)

REFLECTED CLG. PLAN LEGEND

- 2'-0" x 2'-0" LAY-IN ACOUST. CLG. SYSTEM (RE: FIN. SCHED.)
- TYPE-X MOLD-RESISTANT GYP. BD. CLG. SYSTEM (RE: FIN. SCHED.) (RE: DTL. 5/A-111)
- UNFINISHED CEILING U.N.O. (RE: FIN. SCHED. FOR EXPOSED FIN. CLG. LOCATIONS)
- RETURN AIR GRILLE (RE: MECH.)
- SUPPLY AIR DIFFUSER (RE: MECH.)
- LIGHT FIXTURES (RE: ELECT.)
- EMERGENCY LIGHT FIXTURE (RE: ELECT.)
- EXTERIOR WALL-MOUNTED LIGHT FIXTURE (RE: ELECT.)
- WALL-MOUNTED ILLUMINATED EMERGENCY EXIT SIGN (RE: ELECT.)

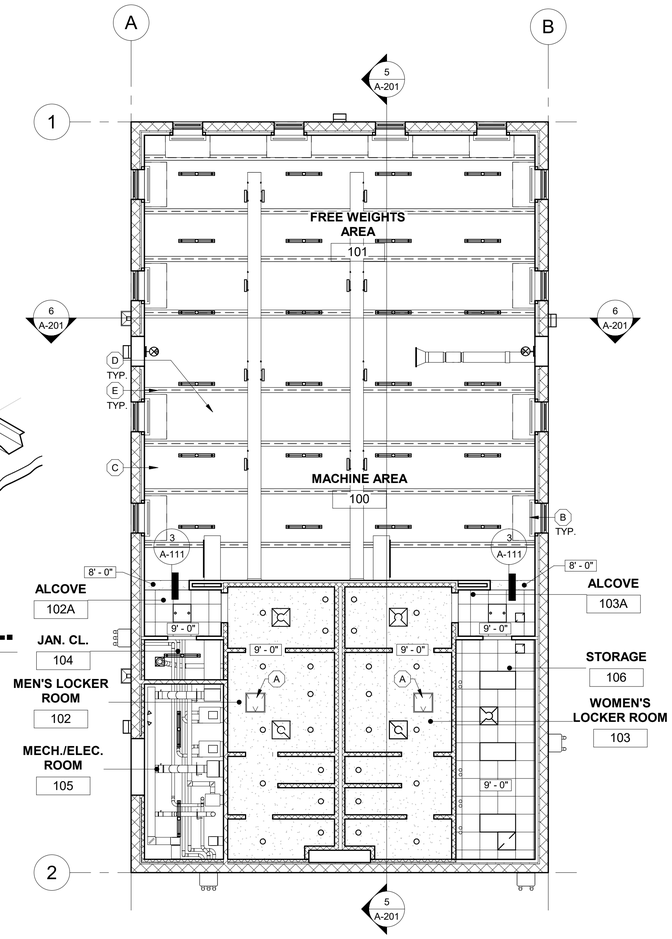

6 REFLECTED CEILING PLAN

0' 4' 8' 12' 1/8" = 1'-0"

NORTH PLAN TRUE

STATE OF MISSOURI
MIKE PARSON,
GOVERNOR

STATE OF MISSOURI
RYAN P. KREMER
NUMBER A-2016015514
07/02/2020
ARCHITECT

BID DOCUMENTS

GLMV Architecture
9229 Ward Parkway, Kansas City, MO 64114
Tel: (816) 444-4200
www.glmv.com
GLMV Architecture, Inc
MO State Certificate of Authority #F00364807
Corporate State of MO Licensee #000305

OFFICE OF ADJUTANT GENERAL
DIVISION OF FACILITIES MANAGEMENT, DESIGN AND CONSTRUCTION
DEPARTMENT OF PUBLIC SAFETY
Missouri Army National Guard

Camp Clark Training Site

18159 South K Highway
Nevada, Missouri 64772

FITNESS CENTER - STORM SHELTER

PROJECT # T1930-01
SITE # 6275
ASSET # 8136274078

REVISION:
DATE:
REVISION:
DATE:
REVISION:
DATE:
ISSUE DATE: 07/02/2020

CAD DWG FILE:

DRAWN BY: JSP
CHECKED BY: RPK
DESIGNED BY: GLMV

SHEET TITLE:
ROOF PLAN, RCP PLAN & DETAILS

SHEET NUMBER:
A-111

BID DOCUMENTS 07/02/2020

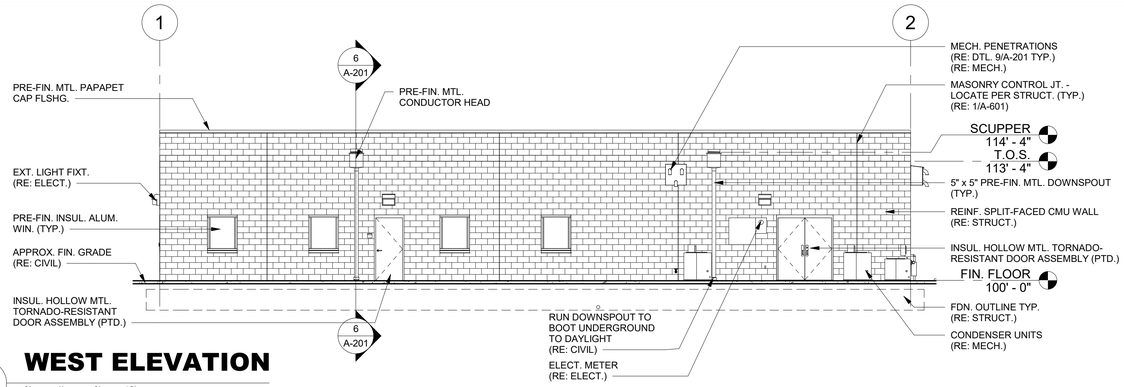

1 WEST ELEVATION

0' 4' 8' 12' 1/8" = 1'-0"

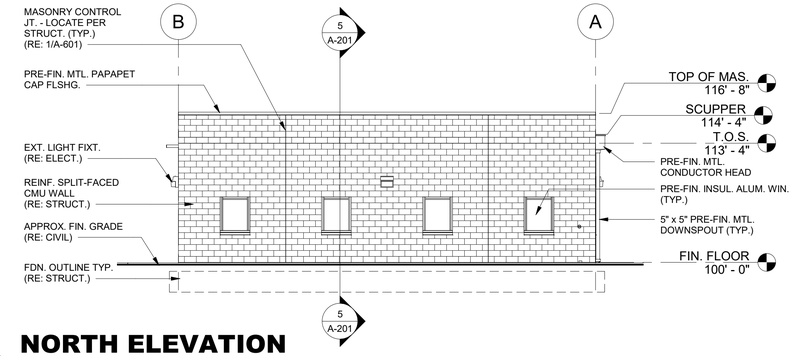

2 NORTH ELEVATION

0' 4' 8' 12' 1/8" = 1'-0"

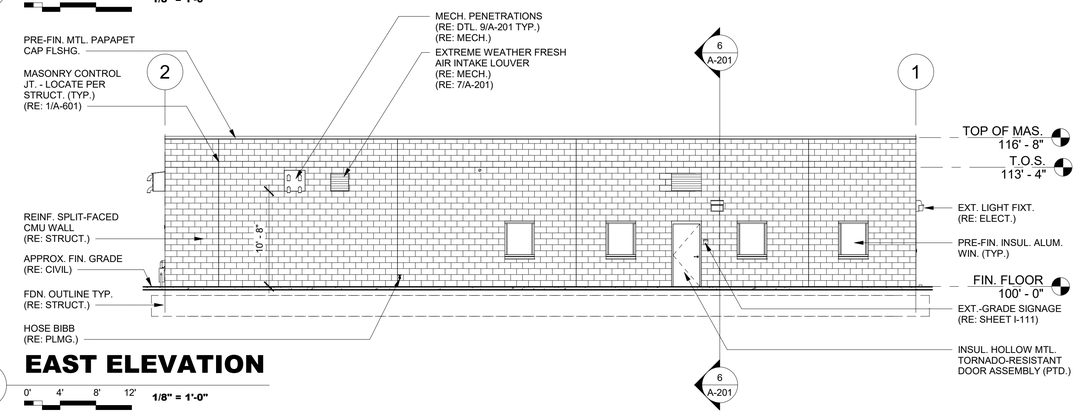

3 EAST ELEVATION

0' 4' 8' 12' 1/8" = 1'-0"

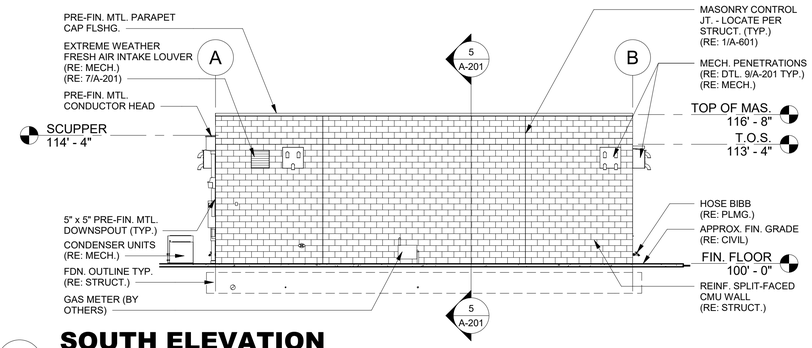

4 SOUTH ELEVATION

0' 4' 8' 12' 1/8" = 1'-0"

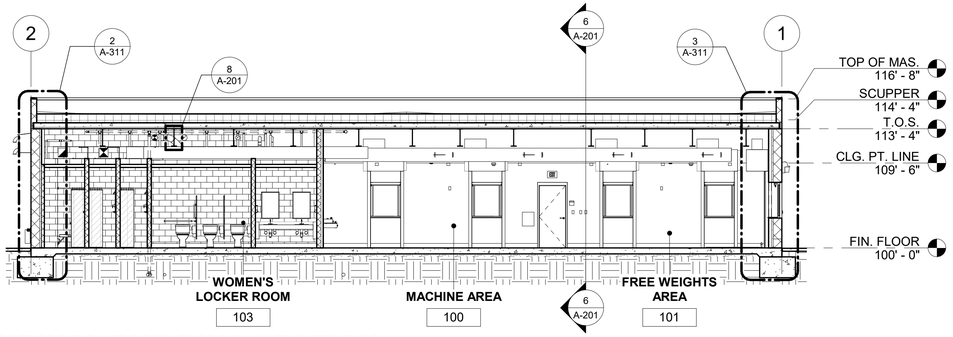

5 LONGITUDINAL BUILDING SECTION

0' 4' 8' 12' 1/8" = 1'-0"

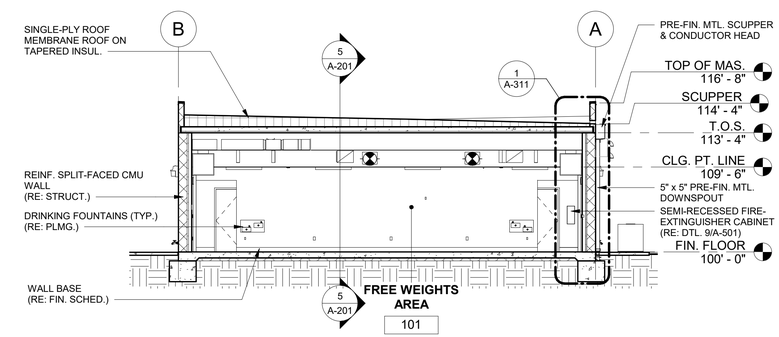

6 BUILDING SECTION

0' 4' 8' 12' 1/8" = 1'-0"

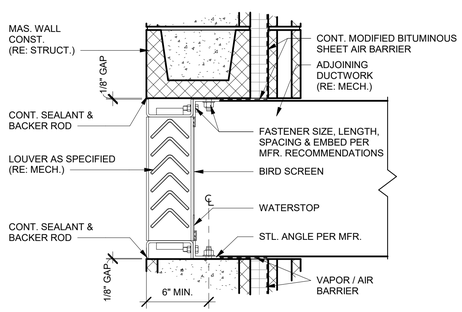

7 LOUVER DETAIL

0' 3" 6" 9" 1' 1 1/2" = 1'-0"

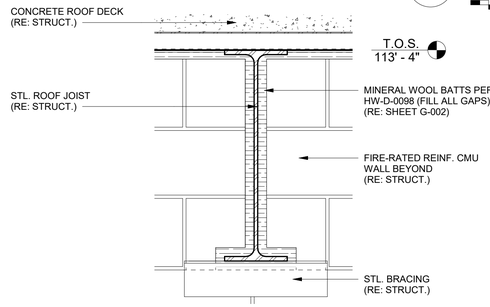

8 FIRE-RATED WALL DETAIL

0' 3" 6" 9" 1' 1 1/2" = 1'-0"

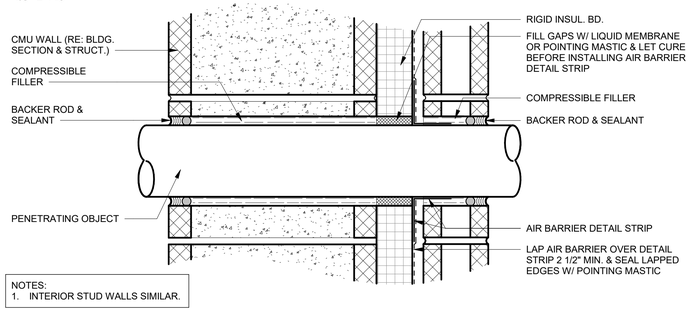

NOTES:
1. INTERIOR STUD WALLS SIMILAR.

9 WALL PENETRATION DETAIL

0' 1" 2" 3" 6" 3" = 1'-0"

STATE OF MISSOURI
MIKE PARSON, GOVERNOR

STATE OF MISSOURI
RYAN P. KREMER
NUMBER A-2016015514
07/02/2020
ARCHITECT

BID DOCUMENTS

GLMVArchitecture
9229 Ward Parkway, Kansas City, MO 64114
Tel: (816) 444-4200
www.glmv.com
GLMV Architecture, Inc
MO State Certificate of Authority #F00364807
Corporate State of MO Licensee #000305

OFFICE OF ADJUTANT GENERAL
DIVISION OF FACILITIES MANAGEMENT, DESIGN AND CONSTRUCTION
DEPARTMENT OF PUBLIC SAFETY
Missouri Army National Guard

Camp Clark Training Site

18159 South K Highway
Nevada, Missouri 64772

FITNESS CENTER - STORM SHELTER

PROJECT # T1930-01
SITE # 6275
ASSET # 8136274078

REVISION:
DATE:
REVISION:
DATE:
REVISION:
DATE:
ISSUE DATE: 07/02/2020

CAD DWG FILE:

DRAWN BY: JSP
CHECKED BY: RPK
DESIGNED BY: GLMV

SHEET TITLE:
BUILDING ELEVATIONS & SECTIONS

SHEET NUMBER:
A-201

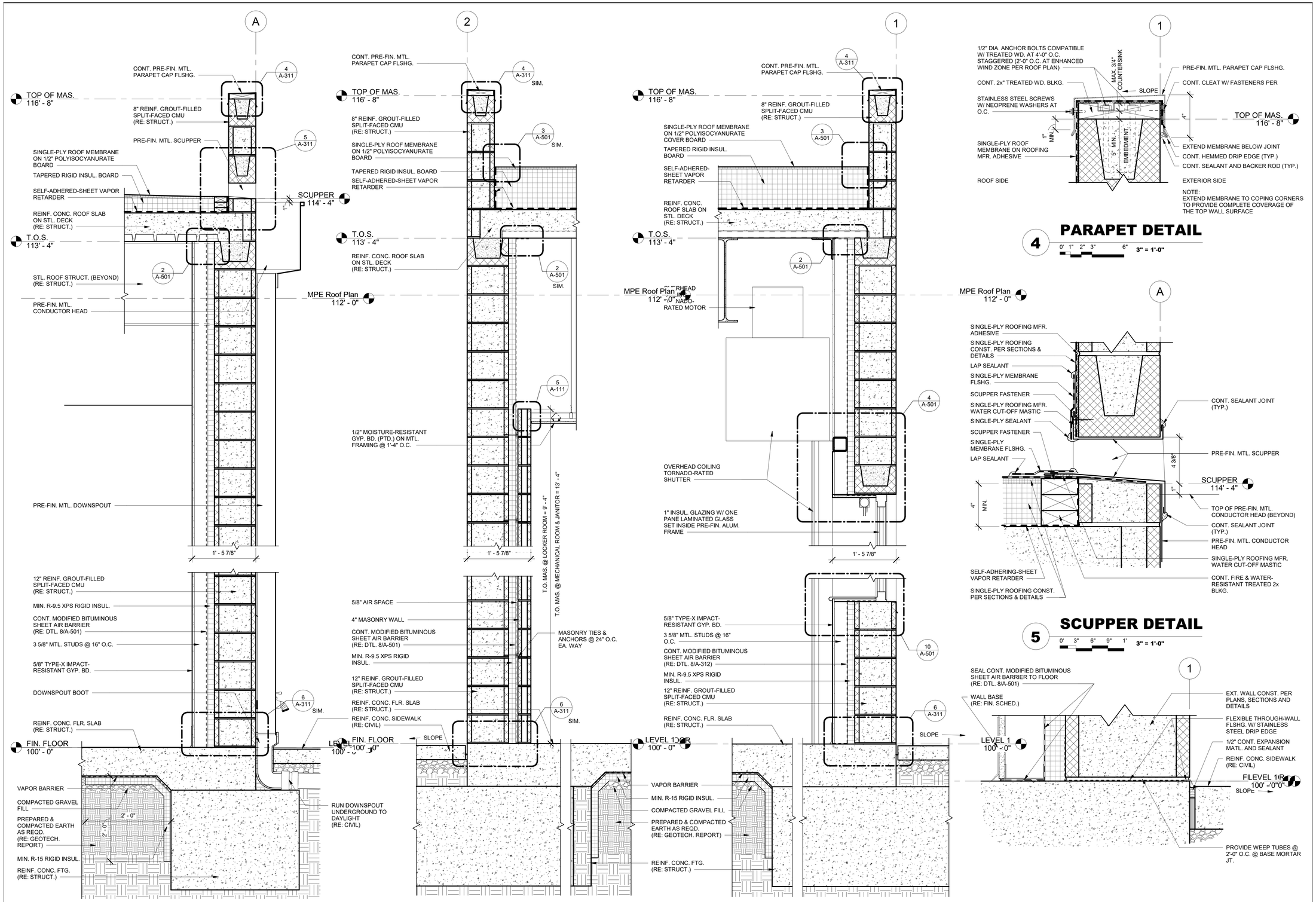

STATE OF MISSOURI
MIKE PARSON, GOVERNOR

STATE OF MISSOURI
RYAN P. KREMER
NUMBER A-2016015514
07/02/2020
ARCHITECT

BID DOCUMENTS

GLMVArchitecture
9229 Ward Parkway, Kansas City, MO 64114
Tel: (816) 444-4200
www.glmv.com
GLMV Architecture, Inc
MO State Certificate of Authority #F00364807
Corporate State of MO Licensee #000305

OFFICE OF ADJUTANT GENERAL
DIVISION OF FACILITIES MANAGEMENT, DESIGN AND CONSTRUCTION
DEPARTMENT OF PUBLIC SAFETY
Missouri Army National Guard

Camp Clark Training Site

18159 South K Highway
Nevada, Missouri 64772

FITNESS CENTER - STORM SHELTER

PROJECT # T1930-01
SITE # 6275
ASSET # 8136274078

REVISION:
DATE:
REVISION:
DATE:
REVISION:
DATE:
ISSUE DATE: 07/02/2020

CAD DWG FILE:

DRAWN BY: JSP
CHECKED BY: RPK
DESIGNED BY: GLMV

SHEET TITLE:

WALL SECTIONS & DETAILS

SHEET NUMBER:

A-311

BID DOCUMENTS 07/02/2020

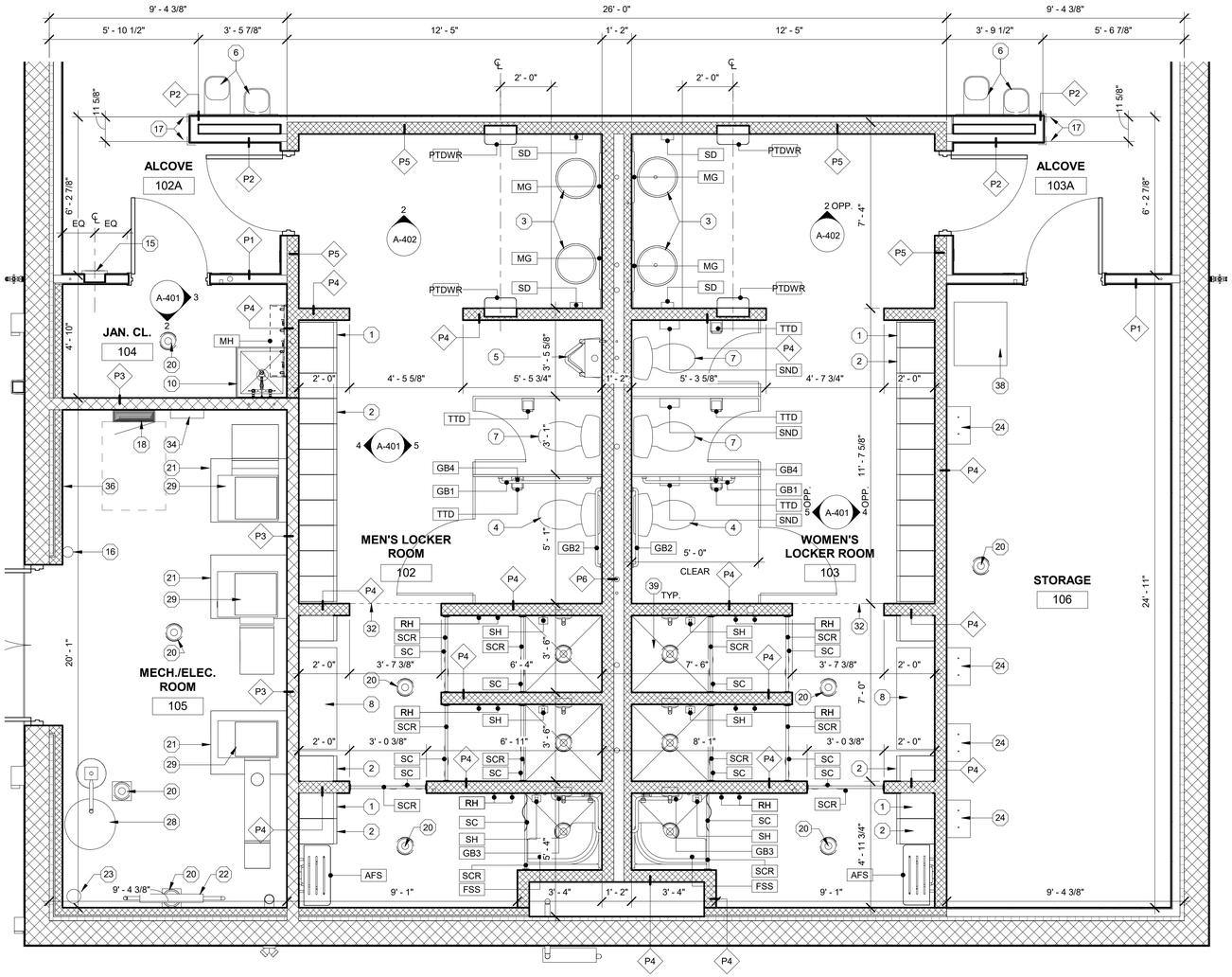

NOTE:
WALLS INSIDE MENS AND WOMENS LOCKER ROOMS MIRROR THE OTHER'S RESPECTIVE SPACE. TO REDUCE CLUTTER, SOME DIMENSIONS ARE NOT SHOWN. USE DIMENSIONS FROM BOTH SPACES TO LOCATE ALL WALLS.

1 ENLARGED LOCKER ROOM PLAN

0' 1' 2' 4' 3/8" = 1'-0"

NORTH
PLAN TRUE

FLR. PLAN KEYNOTE LEGEND

(KEYNOTES DO NOT NECESSARILY APPEAR ON ALL SHEETS)

1. SINGLE TIER STEEL LOCKER (RE: INT. ELEVATIONS)
2. DOUBLE TIER STEEL LOCKERS (TYP. U.N.O.)
3. ADA COMPLIANT LAVATORY (RE: PLMG.)
4. ADA COMPLIANT TOILET (RE: PLMG.)
5. ADA COMPLIANT URINAL (RE: PLMG.)
6. ADA COMPLIANT DRINKING FOUNTAINS (RE: PLMG.)
7. TOILET (RE: PLMG.)
8. CHANGING BENCH
9. ADA COMPLIANT TRANSITION STRIP (RE: DTL. 4/I-101)
10. JANITOR'S SINK (RE: DTLS. 2/A-401, 3/A-401 & PLMG.)
11. FITNESS EQUIPMENT (RE: EQUIPMENT PLAN, 1/I-101)
12. CONDENSER UNIT (RE: MECH.)
13. REINF. CONC. SIDEWALK (RE: CIVIL)
14. CMU CONTROL JT. LOCATION (RE: 2/A-601)
15. FIRE EXTINGUISHER W/ SEMI-RECESSED CABINET (RE: 9/A-501)
16. WALL-MOUNTED FIRE EXTINGUISHER (MOUNTED PER ADA REQMTS.)
17. CORNER GUARD (RE: FINISH LEGEND & DTL. 2/I-101)
18. ELECTRICAL PANEL AND REQUIRED CLEARANCES (RE: ELECT.)
19. RUN DOWN SPOUT TO BOOT AND UNDERGROUND TO DAYLIGHT (RE: CIVIL)
20. FLOOR DRAIN (RE: PLMG. & RE: 3/I-101)
21. CONCRETE HOUSEKEEPING PADS (RE: STRUCT.)
22. DOMESTIC WATER BACKFLOW PREVENTER (RE: PLMG.)
23. FIRE DEPARTMENT ENTRY AND RISER (RE: PLMG.)
24. INSTANT WATER HEATER (RE: PLMG. & ELECT.)
25. CT CABINET (RE: ELECT.)
26. CONDENSER UNIT DISCONNECT (RE: ELECT.)
27. FIRE DEPARTMENT CONNECTION (RE: PLMG.)
28. WATER SOFTENER COMPONENTS (RE: PLMG.)
29. HVAC UNITS AND ADJACENT DUCTWORK (RE: MECH.)
30. OUTDOOR HOSE BIB / WATER HYDRANT (RE: PLMG.)
31. TORNADO-RESISTANT STEEL OVERHEAD COILING DOOR (MOTOR & CASING ABOVE SHOWN DASHED)
32. RE: ALTERNATE #2 - SHOWER AREA LIMIT (RE: SHEET I-101, INTERIOR NOTES)
33. YOGA MATS (BY OTHERS)
34. FIRE ALARM PANEL (RE: ELECT.)
35. FIRE ALARM ANNUNCIATOR PANEL (RE: ELECT.)
36. FIRE-TREATED PLYWD. PANELBOARD (RE: ELECT.)
37. GAS METER (RE: PLMG.)
38. INVERTER (RE: ELECT.)
39. SLOPED SHOWER BASIN (RE: 6/A-501, BASE BID SIM.)

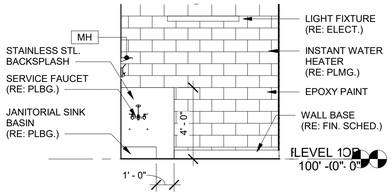

2 JAN. ELEV. (SOUTH)

0' 2' 4' 6' 1/4" = 1'-0"

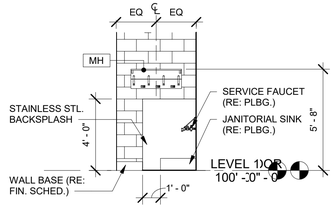

3 JAN. ELEV. (EAST)

0' 2' 4' 6' 1/4" = 1'-0"

TOILET ACCESSORY SCHED.

MARK	ITEM	DESCRIPTION
AFS	ACCESSIBLE FOLDING SEAT	22" x 15" SOLID PHENOLIC FOLDING / DRESSING AREA SEAT
FSS	FOLDING SHOWER SEAT	STANDARD ACCESSIBLE FOLDING SHOWER SEAT
GB1	GRAB BAR	42" LONG STANDARD STAINLESS STEEL GRAB BAR
GB2	GRAB BAR	36" LONG STANDARD STAINLESS STEEL GRAB BAR
GB3	GRAB BAR	STANDARD ACCESSIBLE STAINLESS STEEL SHOWER GRAB BAR(S)
GB4	GRAB BAR	18" LONG STANDARD STAINLESS STEEL VERTICAL GRAB BAR
MG	MIRROR	1/4" FLOAT GLASS, 24"x36" CHANNEL FRAME
MH	MOP RACK	34" LONG UTILITY SHELF, 3 MOP HOLDERS, 4 HOOKS
PTDWR	PAPER TOWEL DISPENSER / WASTE RECEPTACLE	SEMI-RECESSED, STAINLESS STEEL UNIT
RH	ROBE / TOWEL HOOK	STAINLESS STEEL
SC	SHOWER CURTAIN	BY OTHERS
SCR	SHOWER CURTAIN ROD	36" LONG STANDARD STAINLESS STEEL
SD	LIQUID SOAP DISPENSER	SURFACE MOUNTED
SH	SOAP DISH	SURFACE MOUNTED, STAINLESS STEEL
SND	SANITARY NAPKIN DISPOSAL	SURFACE MOUNTED, STAINLESS STEEL
TTD	TOILET TISSUE DISPENSER	SURFACE MOUNTED, STAINLESS STEEL
ULG	UNDER LAVATORY GUARD	ADA UNDER LAVATORY GUARD

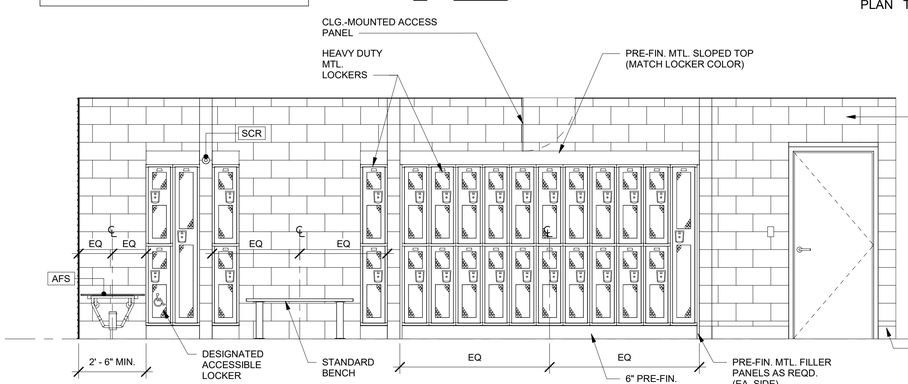

4 MEN'S LOCKER ROOM

0' 1' 2' 4' 3/8" = 1'-0"

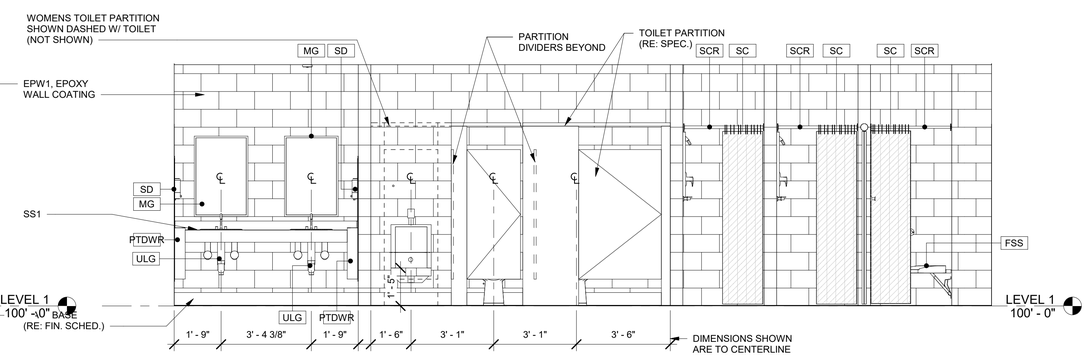

5 MEN'S LOCKER ROOM

0' 1' 2' 4' 3/8" = 1'-0"

STATE OF MISSOURI
MIKE PARSON,
GOVERNOR

STATE OF MISSOURI
RYAN P. KREMER
NUMBER A-2016015514
07/02/2020
ARCHITECT

BID DOCUMENTS

GLMV Architecture
9229 Ward Parkway, Kansas City, MO 64114
Tel: (816) 444-4200
www.glmv.com
GLMV Architecture, Inc
MO State Certificate of Authority #F00364807
Corporate State of MO Licensee #000305

OFFICE OF ADJUTANT GENERAL
DIVISION OF FACILITIES MANAGEMENT, DESIGN AND CONSTRUCTION
DEPARTMENT OF PUBLIC SAFETY
Missouri Army National Guard

Camp Clark Training Site

18159 South K Highway
Nevada, Missouri 64772

FITNESS CENTER - STORM SHELTER

PROJECT # T1930-01
SITE # 6275
ASSET # 8136274078

REVISION:
DATE:
REVISION:
DATE:
REVISION:
DATE:
ISSUE DATE: 07/02/2020

CAD DWG FILE:

DRAWN BY: JSP
CHECKED BY: RPK
DESIGNED BY: GLMV

SHEET TITLE:
ENLARGED PLAN, INTERIOR ELEV. & DETAILS

SHEET NUMBER:
A-401

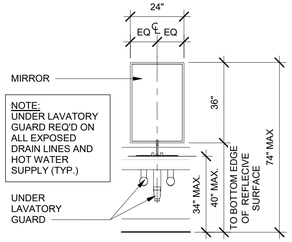

FRONT VIEW

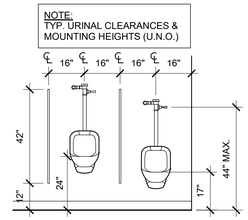

STANDARD URINAL (NOT ADA) | ADA URINAL

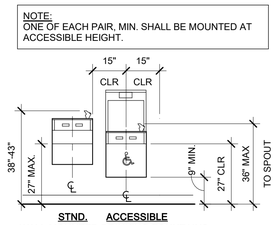

STND. ACCESSIBLE
WALL MOUNTED DRINKING FOUNTAINS AND BOTTLE FILLER

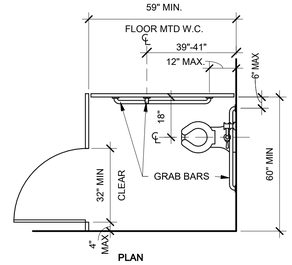

PLAN

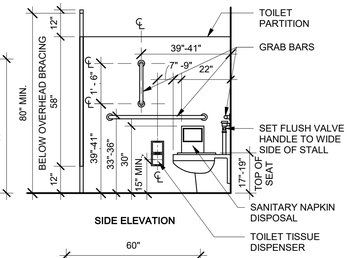

SIDE ELEVATION

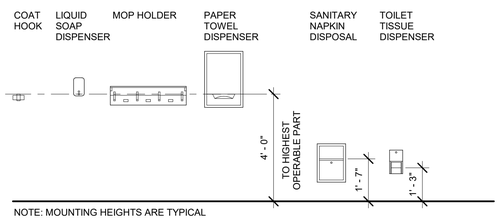

NOTE: MOUNTING HEIGHTS ARE TYPICAL UNLESS NOTED OTHERWISE.

MOUNTING HEIGHTS NOTES

1. THESE PLANS & ELEVATIONS ARE INTENDED TO SHOW TYPICAL MOUNTING HEIGHTS, DIMENSIONS, CLEARANCES, ETC. FOR BOTH ACCESSIBLE (ADA) & NON-ACCESSIBLE FIXTURES & ACCESSORIES.
2. NOT ALL DEVICES, FIXTURES, ACCESSORIES, ETC. SHOWN IN THESE DIAGRAMS ARE APPLICABLE TO THIS PROJECT. REFER TO ENLARGED FLOOR PLANS, INTERIOR ELEVATIONS, ROOM FINISH SCHEDULE, PLMG. DWGS. & PROJECT MANUAL FOR ADDITIONAL INFORMATION, INCLUDING THE SPECIFIC DEVICES, FIXTURES & ACCESSORIES INCLUDED UNDER THIS CONTRACT.
3. COMPLY WITH THE MOUNTING HEIGHTS SHOWN ON THESE DIAGRAMS UNLESS SPECIFICALLY DIMENSIONED ELSEWHERE ON THESE DRAWINGS.
4. ALL DIMENSIONS ARE FROM FINISHED MATERIAL.
5. PLUMBING INSTALLATION KIT REQUIRED ON ALL EXPOSED DRAIN LINES AND HOT WATER SUPPLY (TYP.).
6. CONTRACTOR TO PROVIDE & INSTALL REQD. FIRE-TREATED WD. BLOCKING AS REQUIRED TO ENSURE PROPER INSTALLATION PER THE MANUFACTURER'S INSTALLATION INSTRUCTIONS & STRUCTURAL SUPPORT NECESSARY PER BLDG. CODE REQMTS.

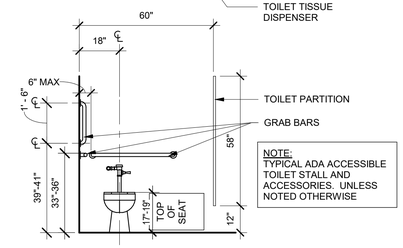

FRONT ELEVATION

1 TOILET ACCESSORIES MOUNTING HEIGHTS

0' 1' 2' 4' 3/8" = 1'-0"

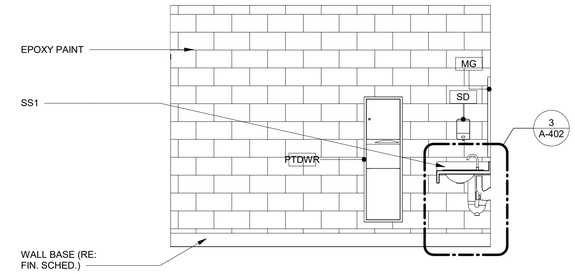

2 MEN'S LOCKER ROOM

0' 1' 2' 4' 3/8" = 1'-0"

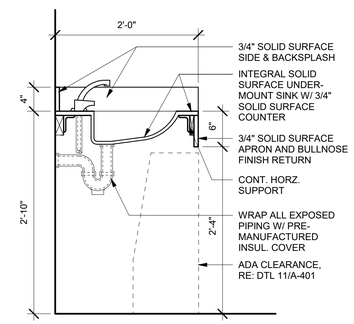

3 TYP. ADA LAVATORY

0' 6" 1' 1" = 1'-0"

STATE OF MISSOURI
MIKE PARSON,
GOVERNOR

STATE OF MISSOURI
RYAN P. KREMER
NUMBER A-2016015514
07/02/2020
ARCHITECT

BID DOCUMENTS

GLMVArchitecture
9229 Ward Parkway, Kansas City, MO 64114
Tel: (816) 444-4200
www.glmv.com
GLMV Architecture, Inc
MO State Certificate of Authority #F00364807
Corporate State of MO Licensee #000305

OFFICE OF ADJUTANT GENERAL
DIVISION OF FACILITIES MANAGEMENT, DESIGN AND CONSTRUCTION
DEPARTMENT OF PUBLIC SAFETY
Missouri Army National Guard

Camp Clark Training Site

18159 South K Highway
Nevada, Missouri 64772

FITNESS CENTER - STORM SHELTER

PROJECT # T1930-01
SITE # 6275
ASSET # 8136274078

REVISION:
DATE:
REVISION:
DATE:
REVISION:
DATE:
ISSUE DATE: 07/02/2020

CAD DWG FILE:

DRAWN BY: Author
CHECKED BY: Checker
DESIGNED BY: Designer

SHEET TITLE:
INTERIOR ELEVATIONS & DETAILS

SHEET NUMBER:
A-402

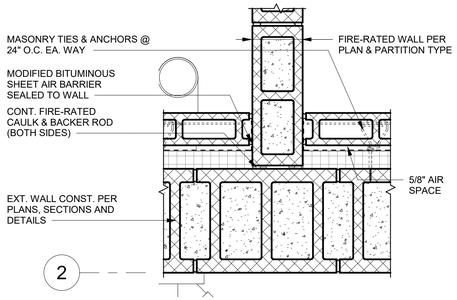

1 WALL TERMINATION PLAN DTL.

0' 3" 6" 9" 1' **1 1/2" = 1'-0"**

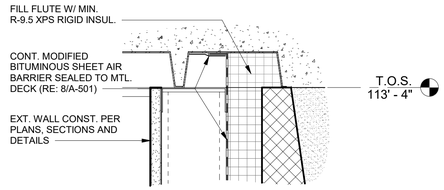

2 WALL TERMINATION DETAIL

0' 1" 2" 3" 6" **3" = 1'-0"**

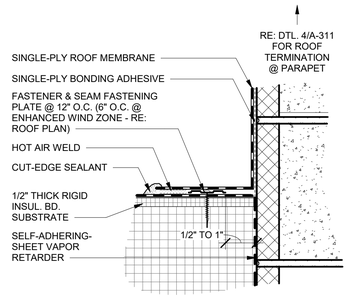

3 ROOF DETAIL

0' 1" 2" 3" 6" **3" = 1'-0"**

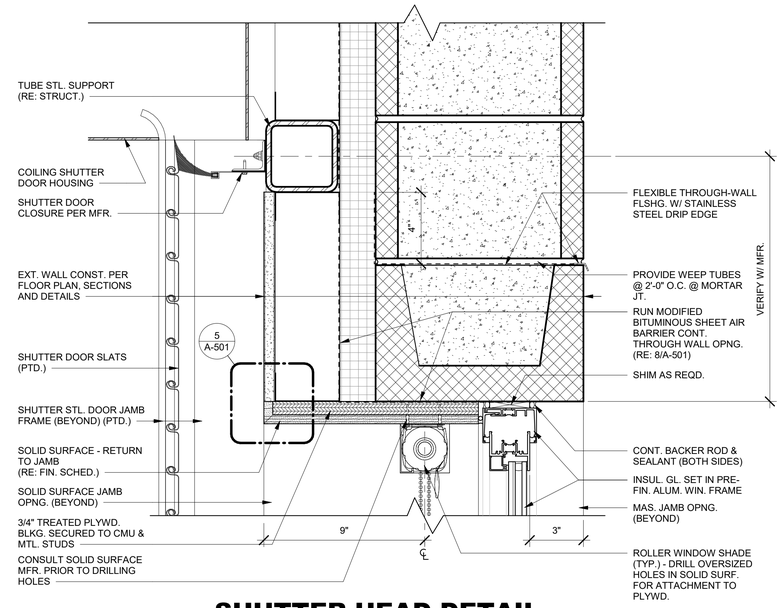

4 SHUTTER HEAD DETAIL

0' 1" 2" 3" 6" **3" = 1'-0"**

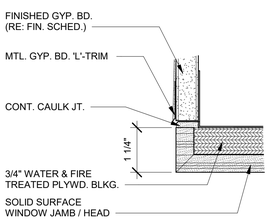

5 WINDOW DTL.

0" 3" 6" 9" **6" = 1'-0"**

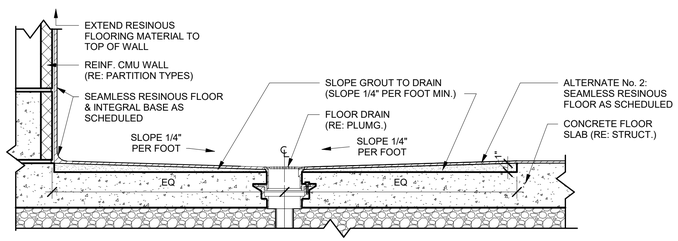

6 ALTERNATE 2 FLOOR (SHOWER) DRAIN DETAIL

0' 3" 6" 9" 1' **1 1/2" = 1'-0"** (BASE BID SIM.)

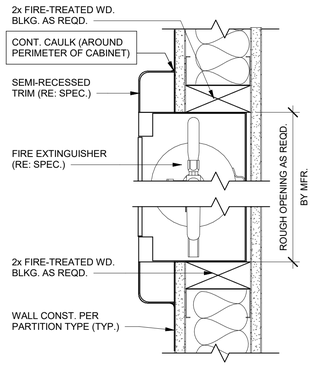

PLAN

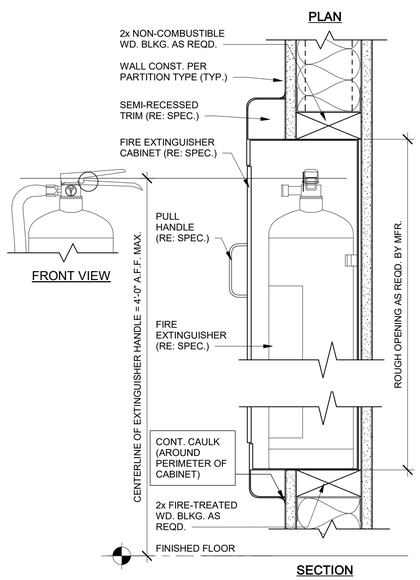

SECTION

9 FIRE EXTINGUISHER DTL.

0' 1" 2" 3" 6" **3" = 1'-0"**

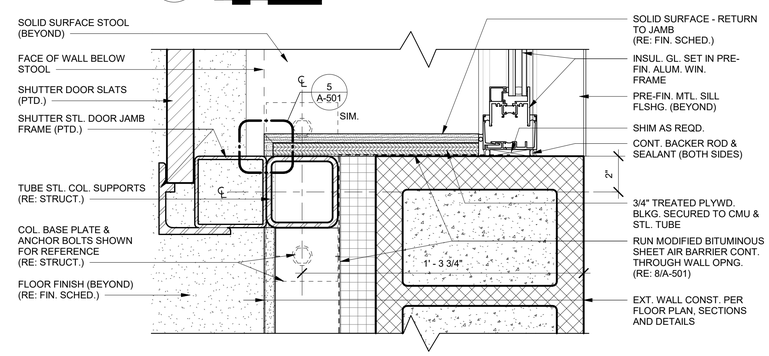

7 SHUTTER JAMB DETAIL

0' 1" 2" 3" 6" **3" = 1'-0"**

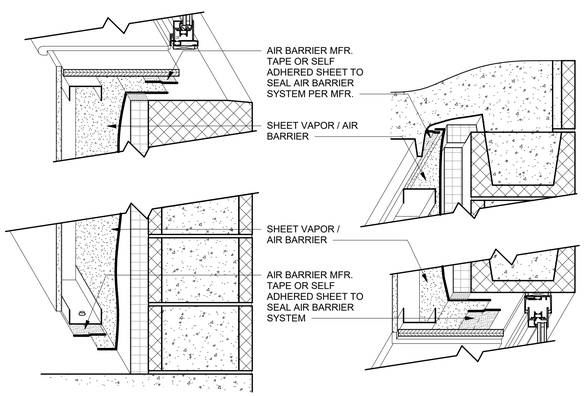

WINDOW/DOOR SILL & WALL TERMINATION AT FLOOR

WINDOW/DOOR HEAD & WALL TERMINATION AT METAL ROOF DECK

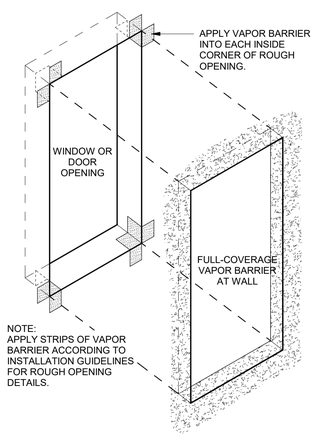

8 VAPOR / AIR BARRIER DETAIL

N.T.S.

AIR BARRIER NOTES:

1. NOT ALL CONSTRUCTION COMPONENTS HAVE BEEN SHOWN OR NOTED. THE PURPOSE OF THE DETAILS HAVE BEEN PROVIDED TO DEMONSTRATE EXTENT OF AIR BARRIER.
2. AIR / VAPOR BARRIER SYSTEM SHALL BE PLACED PRIOR TO THE INSTALLATION OF METAL STUDS, INTERIOR CMU, SHUTTERS AND OTHER ITEMS THAT WOULD OTHERWISE PREVENT AIR BARRIER SYSTEM FROM BEING CONTINUOUS.

NOTE:-

1. DETAIL SHOWN IS FOR NON-RATED WALL USE ONLY. USE FIRE RATED CABINETS IN FIRE RATED WALL ASSEMBLIES (AS REQD.)
2. VERIFY CABINET DIMENSIONS PRIOR TO INSTALLATION.

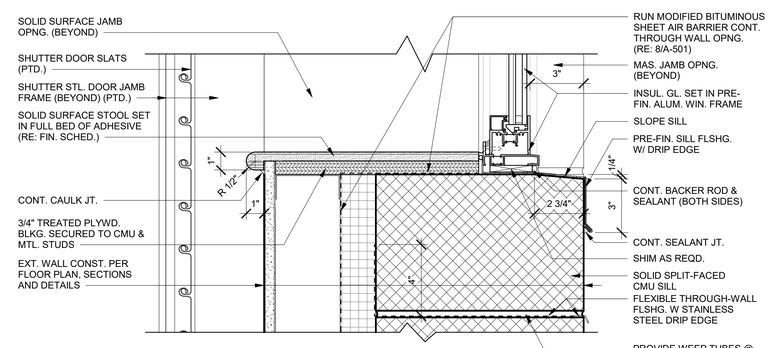

10 DETAIL - SHUTTER SILL

0' 1" 2" 3" 6" **3" = 1'-0"**

STATE OF MISSOURI
MIKE PARSON, GOVERNOR

STATE OF MISSOURI
RYAN P. KREMER
NUMBER A-2016015514
07/02/2020
ARCHITECT

BID DOCUMENTS

GLMVArchitecture
9229 Ward Parkway, Kansas City, MO 64114
Tel: (816) 444-4200
www.glmv.com
GLMV Architecture, Inc
MO State Certificate of Authority #F00364807
Corporate State of MO Licensee #000305

OFFICE OF ADJUTANT GENERAL
DIVISION OF FACILITIES MANAGEMENT, DESIGN AND CONSTRUCTION
DEPARTMENT OF PUBLIC SAFETY
Missouri Army National Guard

Camp Clark Training Site

18159 South K Highway
Nevada, Missouri 64772

FITNESS CENTER - STORM SHELTER

PROJECT # T1930-01
SITE # 6275
ASSET # 8136274078

REVISION:
DATE:
REVISION:
DATE:
REVISION:
DATE:
ISSUE DATE: 07/02/2020

CAD DWG FILE:

DRAWN BY: JSP
CHECKED BY: RPK
DESIGNED BY: JSP

SHEET TITLE:
DETAILS

SHEET NUMBER:
A-501

BID DOCUMENTS 07/02/2020

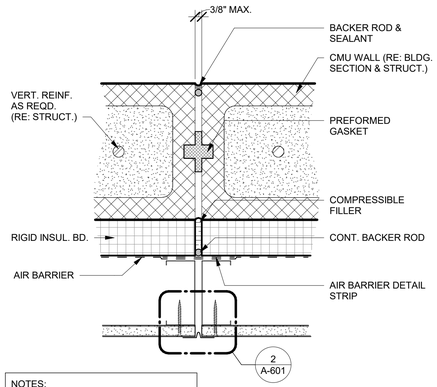

NOTES:
1. SEE STRUCT. FOR LOCATIONS.
2. INTERIOR CMU VENEER SIMILAR.

1 CMU CONTROL JOINT

0' 1" 2" 3" 6" **3" = 1'-0"**

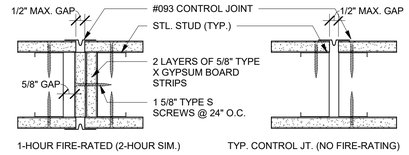

GYPGUM BOARD CONTROL JOINT MAXIMUM SPACING

APPLICATION	MAXIMUM DISTANCE
PARTITION	30 FT.
CEILING	50 FT. (WITH PERIMETER RELIEF) 30 FT. (WITHOUT PERIMETER RELIEF)

NOTES:
1. CONTROL JOINTS SHOULD BE LOCATED TO INTERSECT LIGHT FIXTURES, HEATING VENTS OR DIFFUSERS, ETC. (U.N.O.)
2. DOOR AND WINDOW FRAMES EXTENDING FROM FLOOR TO CEILING MAY SERVE AS A CONTROL JOINT.
3. FOR DOOR AND WINDOW FRAMES THAT DO NOT EXTEND FROM FLOOR TO CEILING, CONTROL JOINTS MAY EXTEND FROM THE UPPER CORNERS OR CENTER OF THE FRAME.
4. CONTROL JOINTS LOCATED IN EXTERIOR WALL FURRING SYSTEMS MUST BE AT THE SAME LOCATION ON THE INTERIOR SIDE.
5. DETAIL APPLIES TO NON-COMBUSTIBLE STEEL STUDS. SEE GYPSUM ASSOCIATION (GA) REQUIREMENTS FOR COMBUSTIBLE CONSTRUCTION.

2 GYP. BD. CONTROL JT.

0' 1" 2" 3" 6" **3" = 1'-0"**

WALL TYPE NOTES

1. STUD SPACING, GAUGE AND BRACING (KICKERS) AS REQUIRED BY FRAMING MANUFACTURER'S LOADING TABLES, OR AS REQUIRED BY STRUCTURAL DRAWINGS (RE: S-001). STUD SPACING NOT TO EXCEED 16" O.C.
2. PARTITION TYPES ARE ASSEMBLED AS NOTED/DEPICTED IN THEIR RESPECTIVE "SERIES" DETAILS EXCEPT AS MODIFIED IN THE INDIVIDUAL PARITION TYPE DESCRIPTIONS. THESE DESCRIPTIONS ARE INTENDED TO SUPPLEMENT THE REQUIREMENTS INDICATED AND ILLUSTRATED IN THEIR RESPECTIVE "SERIES" DETAILS.
3. RATED PARTITIONS SHALL BE CONSTRUCTED PER THE UL ASSEMBLY NUMBERS INDICATED. IN THE EVENT OF A VARIANCE BETWEEN DETAILS IN THIS SET AND A DESIGNATED UL ASSEMBLY, THE UL ASSEMBLY SHALL GOVERN. NOTIFY THE ARCHITECT OF ANY SUCH VARIANCE.
4. WALLS TO BE ERECTED IN ORIENTATION SHOWN IN PARTITION TYPE SERIES DETAILS ACCORDING TO DIRECTION OF LEADER ARROW INCLUDED ON PARTITION TYPE TAG (RE: FLOOR PLANS FOR PARTITION TAGS AND ORIENTATION OF WALLS).
5. PENETRATIONS SUCH AS (HOWEVER, NOT LIMITED TO) CONDUIT, PIPE AND CABLES THROUGH FIRE-RATED CONSTRUCTION SHALL CONFORM TO UL LISTED ASSEMBLIES (RE: SHEET G-002) W-L-1027 FOR PIPE AND CONDUIT AND W-L-3023 FOR CABLES).

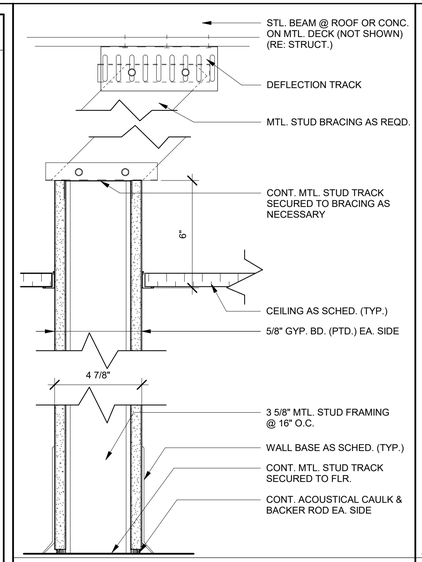

SERIES P1

P1	WALL ASSEMBLY AS NOTED (NON-FIRE-RATED)

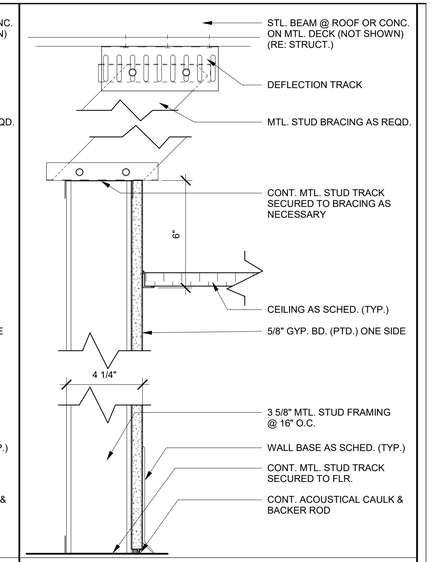

SERIES P2

P2	WALL ASSEMBLY AS NOTED (NON-FIRE-RATED)

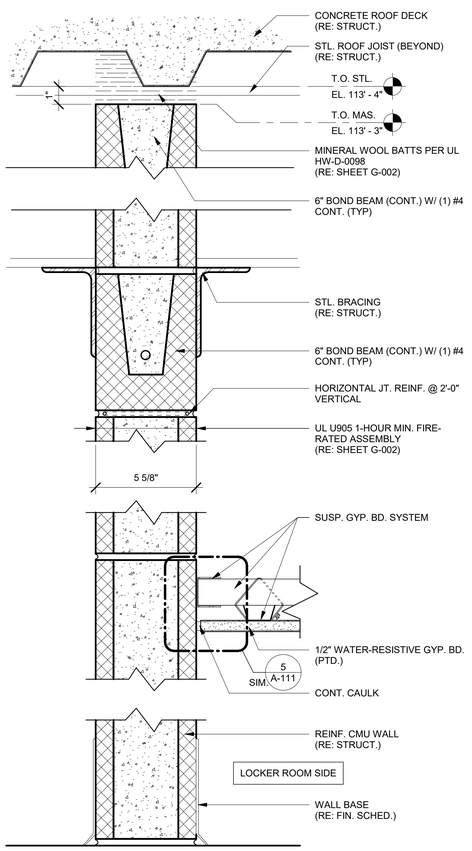

SERIES P3

P3	WALL ASSEMBLY AS NOTED (ONE-HOUR-FIRE-RATED)

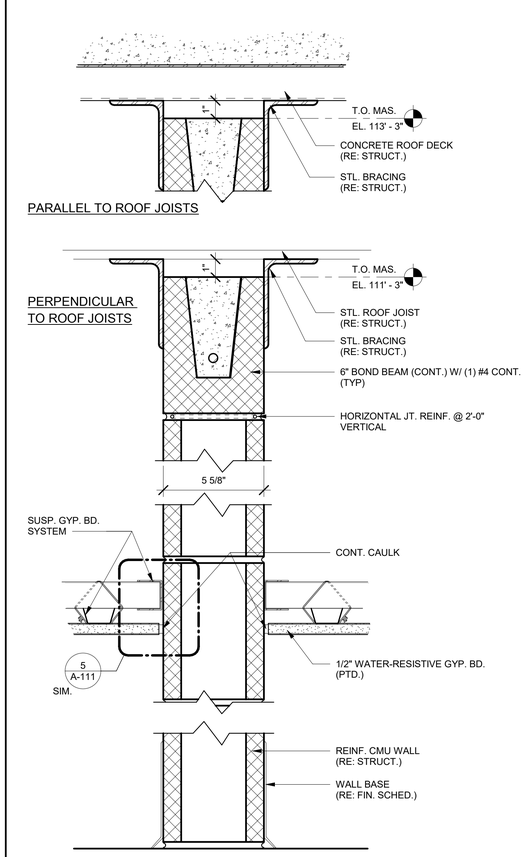

SERIES P4

P4	WALL ASSEMBLY AS NOTED (NON-FIRE-RATED)

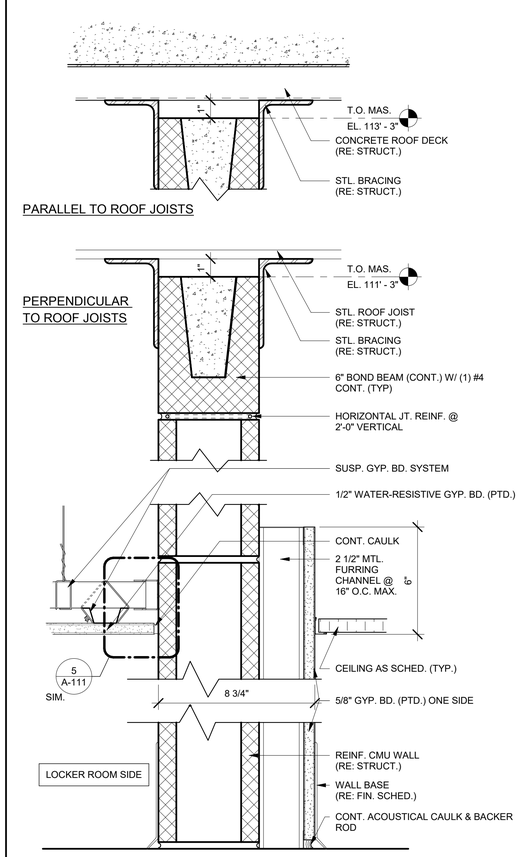

SERIES P5

P5	WALL ASSEMBLY AS NOTED (NON-FIRE-RATED)

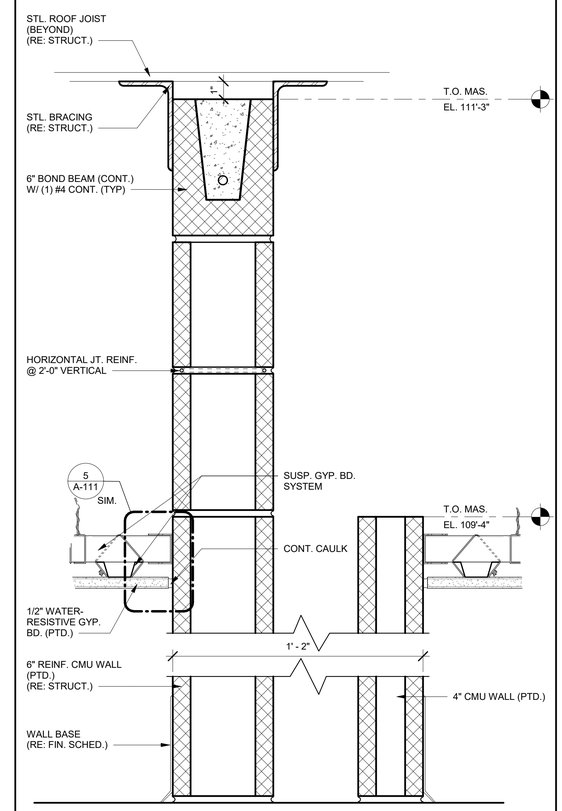

SERIES P6

P6	WALL ASSEMBLY AS NOTED (NON-FIRE-RATED)

STATE OF MISSOURI
MIKE PARSON, GOVERNOR

STATE OF MISSOURI
RYAN P. KREMER
NUMBER A-2016015514
07/02/2020
ARCHITECT

BID DOCUMENTS

GLMVArchitecture
9229 Ward Parkway, Kansas City, MO 64114
Tel: (816) 444-4200
www.glmv.com
GLMV Architecture, Inc
MO State Certificate of Authority #F00364807
Corporate State of MO Licensee #000305

OFFICE OF ADJUTANT GENERAL
DIVISION OF FACILITIES MANAGEMENT, DESIGN AND CONSTRUCTION
DEPARTMENT OF PUBLIC SAFETY
Missouri Army National Guard

Camp Clark Training Site

18159 South K Highway
Nevada, Missouri 64772

FITNESS CENTER - STORM SHELTER

PROJECT # T1930-01
SITE # 6275
ASSET # 8136274078

REVISION:
DATE:
REVISION:
DATE:
REVISION:
DATE:
ISSUE DATE: 07/02/2020

CAD DWG FILE:

DRAWN BY: JSP
CHECKED BY: RPK
DESIGNED BY: GLMV

SHEET TITLE:
PARTITION TYPES & DETAILS

SHEET NUMBER:
A-601

DOOR SCHEDULE

DOOR NO.	DOOR TYPE	DOOR WIDTH x HEIGHT	DOOR PAIR	DOOR MATERIAL	DOOR FINISH	FRAME TYPE	FRAME MATERIAL	FRAME FINISH	DETAILS HEAD	DETAILS JAMB	DETAILS SILL	FIRE RATING	HARDWARE	COMMENTS
102	A1	3' - 0" x 7' - 0"		HDWD	S&V	1B	HM	PTD	2/A-611	4/A-611	-		5	
103	A1	3' - 0" x 7' - 0"		HDWD	S&V	1B	HM	PTD	2/A-611	4/A-611	-		5	
104	A1	3' - 0" x 7' - 0"		HDWD	S&V	1B	HM	PTD	1/A-611	3/A-611	-		3	
106	A1	3' - 0" x 7' - 0"		HDWD	S&V	1B	HM	PTD	1/A-611	3/A-611	-		4	
E100A	A3	3' - 0" x 7' - 0"		INSUL MTL	PTD	1A	HM	PTD	5/A-611	6/A-611	8/A-611		2	
E100B	A3	3' - 0" x 7' - 0"		INSUL MTL	PTD	1A	HM	PTD	5/A-611	6/A-611	8/A-611		2	
E105	A2	3' - 0" x 7' - 0"	Yes	INSUL MTL	PTD	2	HM	PTD	9/A-611	10/A-611	8/A-611		1	

DOOR TYPES

0' 2' 4' 6' 1/4" = 1'-0"

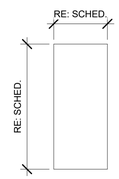

FLUSH

A1 - SINGLE
A2 - DOUBLE (PAIR) TORNADO-RESISTANT DOOR (RE: 7/A-6.11)
A3 - SINGLE TORNADO-RESISTANT DOOR (RE: 7/A-6.11)

FRAME TYPES

0' 2' 4' 6' 1/4" = 1'-0"

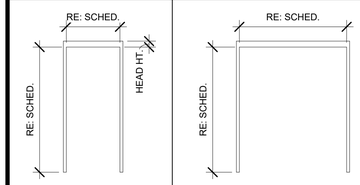

1A - HEAD HT. = 4"
1B - HEAD HT. = 2"

2

WINDOW TYPES

0' 2' 4' 6' 1/4" = 1'-0"

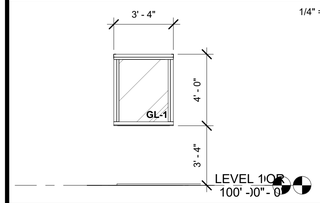

SCHEDULE ABBREVIATIONS (AS APPLICABLE)

HM - HOLLOW METAL (STEEL)
ALUM - ALUMINUM
PTD - PAINTED
HDWR - HARDWARE
PRE-FIN - PRE-FINISHED
STL - STEEL
INSUL - INSULATED
HT - HEIGHT
RE: - REFERENCE
SCHED - SCHEDULE
HDWD - HARDWOOD
S&V - SAND & VARNISH

GLAZING

GL-1 LAMINATED INSULATED GLAZING (RE: SPEC. 088000 - GLAZING)

DOOR NOTES

1. DOOR OPENING FORCE SHALL COMPLY WITH ANSI A117.86, SECTION 4.13.11.
2. HOLLOW METAL DOORS & FRAMES TO BE PAINTED (RE: FIN. SCHED.).
3. ALL EXTERIOR TORNADO-RESISTANT STEEL DOORS AND FRAMES TO BE INSULATED, WEATHER-STRIPPED AND HARDWARE AS TESTED TO MEET THE 2014 ICC 500/NSSA STANDARD FOR THE DESIGN AND CONSTRUCTION OF STORM SHELTERS REQUIREMENTS.
4. SEE SPECIFICATION SECTION 083990 TORNADO-RESISTANT STEEL DOORS AND FRAMES FOR HARDWARE REQUIREMENTS.
5. DOOR DIMENSIONS NOTED IN THE DOOR SCHEDULE ARE NOMINAL. PROVIDE ACTUAL DIMENSIONS AS REQUIRED.
6. SEE FINISH SCHEDULE FOR ADDITIONAL FINISH INFORMATION.

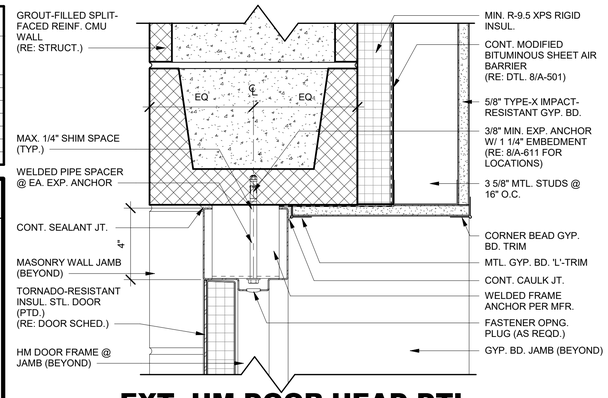

5 EXT. HM DOOR HEAD DTL.

0' 1" 2" 3" 6" 3" = 1'-0"

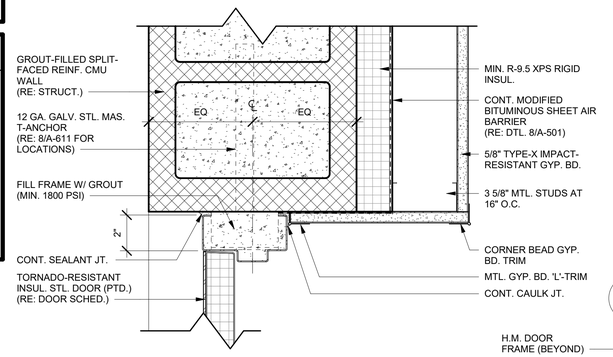

6 EXT. HM DOOR JAMB DTL.

0' 1" 2" 3" 6" 3" = 1'-0"

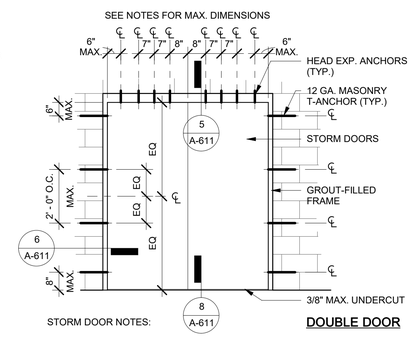

STORM DOOR NOTES:

1. ALL DIMENSIONS SHOWN ARE MINIMUM SPACING REQMTS. FOR SPECIFIC DOORS SIZED FOR THIS PROJECT ONLY.
2. FOLLOW THE APPROVED MFR. ASSEMBLY FOR ALL COMPONENTS AND DIMENSIONS IF MORE STRINGENT.

DOUBLE DOOR

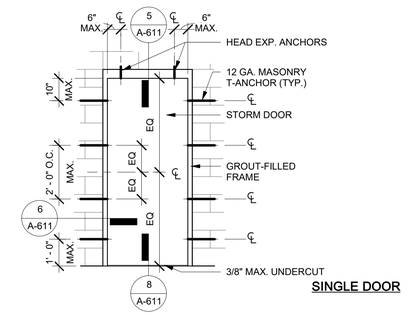

SINGLE DOOR

7 EXT. DOOR ELEVATIONS

0' 1' 2' 4' 3/8" = 1'-0"

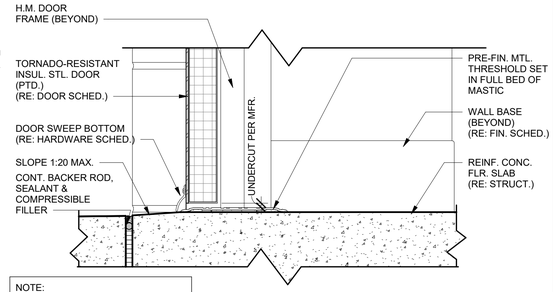

NOTE:
SEE FRAME HEAD & JAMB DTL. FOR LOCATING FRAME IN WALL

8 EXT. HM DOOR SILL DTL.

0' 1" 2" 3" 6" 3" = 1'-0"

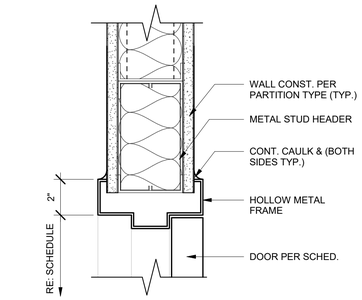

1 INT. HM DOOR HEAD DTL.

0' 1" 2" 3" 6" 3" = 1'-0"

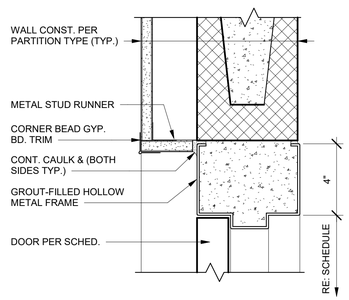

2 INT. HM DOOR HEAD DTL.

0' 1" 2" 3" 6" 3" = 1'-0"

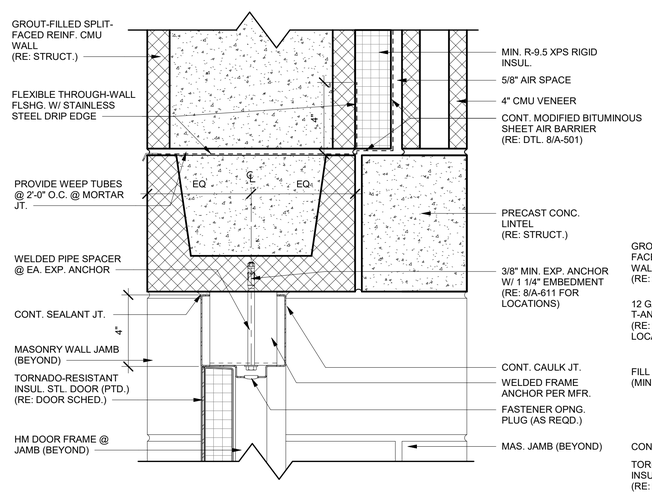

9 EXT. HM DOOR HEAD DTL.

0' 1" 2" 3" 6" 3" = 1'-0"

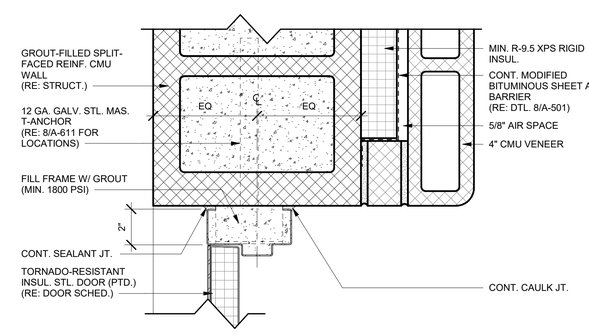

10 EXT. HM DOOR JAMB DTL.

0' 1" 2" 3" 6" 3" = 1'-0"

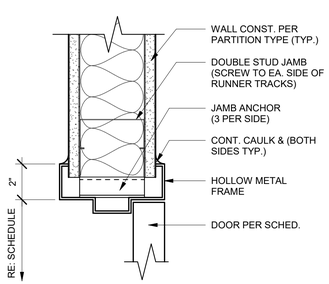

3 INT. HM DOOR JAMB DTL.

0' 1" 2" 3" 6" 3" = 1'-0"

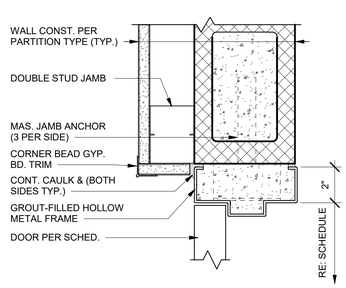

4 INT. HM DOOR JAMB DTL.

0' 1" 2" 3" 6" 3" = 1'-0"

STATE OF MISSOURI
MIKE PARSON,
GOVERNOR

STATE OF MISSOURI
RYAN P. KREMER
NUMBER A-2016015514
07/02/2020
ARCHITECT

BID DOCUMENTS

GLMV Architecture
9229 Ward Parkway, Kansas City, MO 64114
Tel: (816) 444-4200
www.glmv.com
GLMV Architecture, Inc
MO State Certificate of Authority #F00364807
Corporate State of MO Licensee #000305

OFFICE OF ADJUTANT GENERAL
DIVISION OF FACILITIES MANAGEMENT, DESIGN AND CONSTRUCTION
DEPARTMENT OF PUBLIC SAFETY
Missouri Army National Guard

Camp Clark Training Site
18159 South K Highway
Nevada, Missouri 64772

FITNESS CENTER - STORM SHELTER

PROJECT # T1930-01
SITE # 6275
ASSET # 8136274078

REVISION:
DATE:
REVISION:
DATE:
REVISION:
DATE:
ISSUE DATE: 07/02/2020

CAD DWG FILE:

DRAWN BY: JSP
CHECKED BY: RPK
DESIGNED BY: GLMV

SHEET TITLE:
SCHEDULES & DETAILS

SHEET NUMBER:
A-611

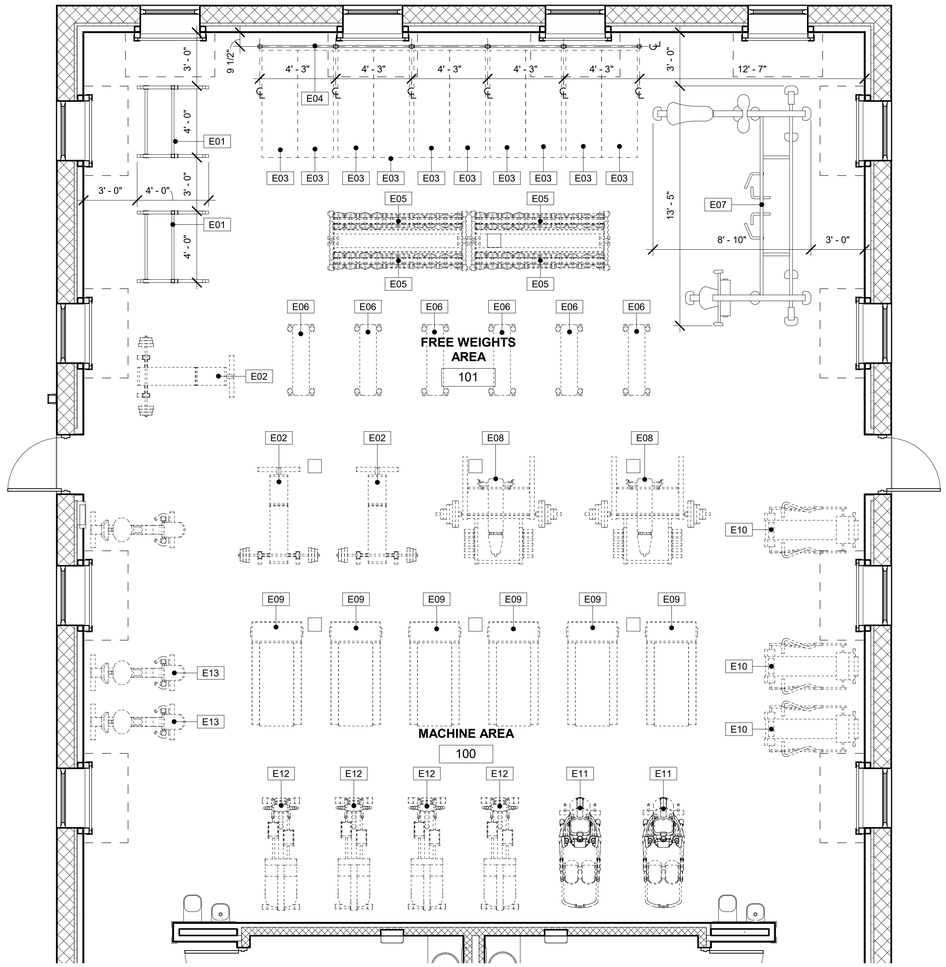

1 EQUIPMENT PLAN

0' 4' 8' 12' 1/4" = 1'-0"

NORTH

PLAN TRUE

ROOM FINISH SCHEDULE

FITNESS CENTER ROOM FINISH SCHEDULE

ROOM NUMBER	ROOM NAME	FLOOR FINISH	BASE FINISH	NORTH WALL FINISH	EAST WALL FINISH	SOUTH WALL FINISH	WEST WALL FINISH	CEILING FINISH	INTERIOR FINISH NOTES
100	MACHINE AREA	AF1	RB1	-	P1,P3	P2,P3	P1, P3	PC2	1
101	FREE WEIGHTS AREA	AF1	RB1	P1, P3	P1, P3	-	P1, P3	PC2	1
102	MEN'S LOCKER ROOM	SC1	RB1	EPW1	EPW1	EPW1	EPW1	GYP, PC1	2, 4, 5
102A	ALCOVE	SC1	RB1	P2	P2	P2	P1	APC1	1, 3, 4
103	WOMEN'S LOCKER ROOM	SC1	RB1	EPW1	EPW1	EPW1	EPW1	GYP, PC1	2, 4, 5
103A	ALCOVE	SC1	RB1	P2	P1	P2	P2	APC1	1, 3, 4
104	JAN. CL.	SC1	RB1	P1	P1	P1	P1	EXP, PC1	1, 4
105	MECH./ELEC. ROOM	SC1	RB1	P1	P1	P1	P1	EXP, PC1	1
106	STORAGE	SC1	RB1	P1	P1	P1	P1	APC1	1

INTERIOR FINISH NOTES

1. EPOXY PAINT SHALL EXTEND FROM BASE TO 4'-0" A.F.F.; EPOXY PAINT TO MATCH COLOR OF PAINT SPECIFIED IN FINISH SCHEDULE. PAINT AS SCHEDULED TO EXTEND FROM 4'-0" TO CEILING.
2. RUBBER BASE SHALL NOT BE INSTALLED IN SHOWER AREAS. SHOWER AREAS SHALL RECEIVE SC2 FLOOR & EPW1 WALLS. REFER TO KEYNOTE 32 ON SHEET A-101 FOR DEFINED 'SHOWER AREA'.
3. RUBBER BASE SHALL EXTEND ALONG WEST WALL OF ALCOVE 102A AND EAST WALL OF ALCOVE 103A EVEN IF ADD ALTERNATE #2 IS ACCEPTED, SO AS TO MAINTAIN A CONTINUOUS WALL BASE MATERIAL BETWEEN MACHINE AREA AND ALCOVES ALONG THOSE RESPECTIVE WALLS.
4. ADD ALTERNATE #2 - PROVIDE SEAMLESS RESINOUS FLOORING FINISHES IN THE FOLLOWING SPACES: MEN'S LOCKER ROOM 102 (AND SHOWER AREA) , ALCOVE 102A, WOMEN'S LOCKER ROOM 103 (AND SHOWER AREA), ALCOVE 103A, & JANITOR 104. PROVIDE INTEGRAL SEAMLESS RESINOUS WALL BASE (IN CONJUNCTION WITH THE FLOOR) AT ALL WALL LOCATIONS. PROVIDE FULL HEIGHT EPOXY WALL COATING, EPW1, IN JANITOR 104. (RE: DETAIL 6/A-501 FOR SHOWER DRAIN)
5. CEILING PAINT IN LOCKER ROOMS AND SHOWERS AREAS TO BE EPOXY.

GENERAL INTERIOR NOTES

A. ALL EXPOSED CONCRETE FLOORS TO BE SEALED UNLESS NOTED OTHERWISE
B. ALL FLOOR FINISH CHANGES AT DOORWAYS TO OCCUR UNDER CENTERLINE OF DOOR UNLESS NOTED OTHERWISE
C. REFER TO REFLECTED CEILING PLAN FOR CEILING HEIGHTS.
D. RESILIENT BASE CORNERS TO BE FIELD FORMED.
E. ALL METAL DOORS & FRAMES TO BE FACTORY PRIMED AND FIELD PAINTED.
F. ALL EXTERIOR WINDOWS SHALL RECEIVE WINDOW TREATMENT, WT1.
G. REFER TO PAINT SPECIFICATION & FINISH LEGEND FOR ALL PAINT SHEENS & FINISHES.
H. ALL EXPOSED PIPES UNDER SINKS SHALL RECEIVE 'PIK', PLUMBING INSULATION KIT PER ADA. REFER TO TOILET ACCESSORIES SCHEDULE & SPECIFICATION.

FINISH LEGEND

MATERIAL	DESCRIPTION	OTHER
BASE		
RB1	RESILIENT BASE	BASIS OF DESIGN: ROPPE/ RUBBER (TYPE TS)/ 114 LUNAR DUST/ 6" H
SRB1	SEAMLESS RESINOUS COVE BASE (ALTERNATE 2)	BASIS OF DESIGN: DESCO/ QUARTZ CREMONA/ TG-404/ 8"H INTEGRAL COVE (TO ALIGN WITH CMU COURSING); COLOR TO MATCH SRF1, SEAMLESS RESINOUS FLOOR (RE: 7/1-101)
CEILING		
APC1	ACOUSTICAL PANEL CEILING	BASIS OF DESIGN: ARMSTRONG/ ULTIMA/ 1910/ 24"X 24" with 15/16" SQUARE LAY-IN SUSPENSION SYSTEM
EXP	EXPOSED STRUCTURE	-
GYP	GYPSUM WALLBOARD	-
PC1	PAINT (CEILING)	BASIS OF DESIGN: SHERWIN WILLIAMS / PURE WHITE 7005 / EGGSHELL
PC2	PAINT (CEILING)	BASIS OF DESIGN: SHERWIN WILLIAMS / BLACK OF NIGHT 6993 / MATTE
FLOORS		
AF1	ATHLETIC FLOOR	BASIS OF DESIGN: MATS INC./ DECATHLON DESIGN/ LUNAR LIGHT
SC1	SEALED CONCRETE	SEALED CONCRETE WITH HARDENER
SC2	SEALED CONCRETE (SHOWERS)	SEALED CONCRETE WITH SLIP RESISTANT TEXTURE
SRF1	SEAMLESS RESINOUS FLOOR (ALTERNATE 2)	BASIS OF DESIGN: DESCO/ QUARTZ CREMONA/ TG-404 (RE: DTL. 6/I-101 FOR FLOOR TRANSITIONS AT SEALED FLOORS)
MISCELLANEOUS		
SS1	SOLID SURFACE (COUNTERS)	BASIS OF DESIGN: WILSONART/ YUKON RIVERSTONE 9196RS
SS2	SOLID SURFACE (WINDOW SILL, JAMB & HEADER)	BASIS OF DESIGN: WILSONART/ LUMINOUS WHITE 9221SP
WT1	WINDOW TREATMENT	BASIS OF DESIGN: MECHO SHADE/ SOHO/ 1600 SERIES/ 3% OPEN/ 1622 HOWARD
WALLS		
CG1	CORNER GUARD	BASIS OF DESIGN: INPRO/ SURFACE MOUNT STAINLESS STEEL/ 16 GAUGE/ 1-1/2" WING x 4'-0" H
EPW1	EPOXY WALL COATING	BASIS OF DESIGN: DESCO/ WALLGLASS FX/ COLOR TO MATCH P1, PAINT
P1	PAINT	BASIS OF DESIGN: SHERWIN WILLIAMS/ MINDFUL GREY 7016/ SATIN; PAINT TO MATCH MLP1, METAL LINER PANEL COLOR
P2	PAINT (ACCENT)	BASIS OF DESIGN: SHERWIN WILLIAMS/ SERIOUS GRAY 6256/ SATIN
P3	PAINT (CEILING COLOR EXTENDED ONTO WALLS)	BASIS OF DESIGN: SHERWIN WILLIAMS / BLACK OF NIGHT 6993 / MATTE; RE: 5/A-201 & 6/A-201 BUILDING SECTIONS FOR PAINT LIMIT FOR ENTIRE ROOM(S) (FROM CEILING PAINT LINE TO CEILING)
P4	PAINT (DOOR FRAMES)	BASIS OF DESIGN: SHERWIN WILLIAMS/ PORPOISE 7047/ SEMI-GLOSS; COLOR TO MATCH RB1, RUBBER BASE

FITNESS EQUIPMENT SCHEDULE

MARK	TYPE	POWER	BASIS OF DESIGN	FURNISHED*	INSTALLED*
E01	SQUAT RACK W/ PULL-UP BAR	-	LEGEND FITNESS MODEL #3121	C	C
E02	LIFTING BENCH	-	BY OTHERS	G	G
E03	YOGA MAT	-	BY OTHERS	G	G
E04	FLOOR-MOUNTED SIT-UP BARS	-	RE: DTL. 5/I-101	C	C
E05	DUMBELL RACK	-	BY OTHERS	G	G
E06	BENCH	-	BY OTHERS	G	G
E07	CABLE CROSSOVER MACHINE	-	LEGEND FITNESS MODEL #1132	C	C
E08	BENCH PRESS W/ BARBELLS	-	BY OTHERS	G	G
E09	TREADMILL	120V, 1-PH	BY OTHERS	G	G
E10	ROWING MACHINE	120V, 1-PH	BY OTHERS	G	G
E11	STAIR CLIMBER	120V, 1-PH	BY OTHERS	G	G
E12	ELLIPTICAL	120V, 1-PH	BY OTHERS	G	G
E13	EXERCISE BIKE	120V, 1-PH	BY OTHERS	G	G

* RESPONSIBILITIES: C = CONTRACTOR; G = GOVERNMENT

EQUIPMENT NOTES

1. ALL EQUIPMENT HAS BEEN SHOWN ON THE PLAN FOR PLANNING AND LAYOUT PURPOSES. REFER TO EQUIPMENT SCHEDULE FOR ITEMS TO BE INCLUDED IN THE CONTRACT.
2. DIMENSIONS TO EQUIPMENT ARE FOR LOCATING THE RESPECTIVE ITEMS. REFER TO MANUFACTURER'S INSTALLATION MANUALS FOR ANCHORING EQUIPMENT TO THE FLOOR.
3. POWER SHOWN IN THE SCHEDULE IS FOR THE OWNER'S USE IN THE SELECTION OF SPECIFIC EQUIPMENT.
4. THE BASIS-OF-DESIGN HAS BEEN NOTED IN THE SCHEDULE. ACCEPTABLE MANUFACTURERS (OR EQUAL PRODUCTS) INCLUDE:
   A. LEGEND FITNESS
   B. ROGUE FITNESS
   C. PRECOR
5. CONTRACTOR SHALL FULLY ASSEMBLE EQUIPMENT TO OPERATE AS INTENDED.

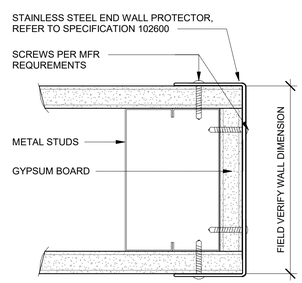

2 CORNER GUARD DETAIL

0" 3" 6" 9" 6" = 1'-0"

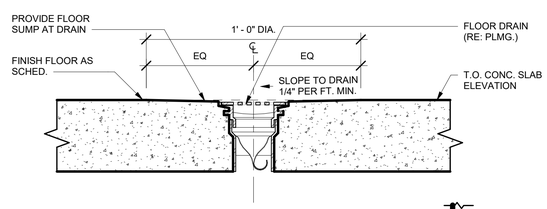

3 FLOOR DRAIN DETAIL

0' 1" 2" 3" 6" 3" = 1'-0"

REFER TO INTERIOR FINISH NOTES FOR ADD ALTERNATE INFORMATION.

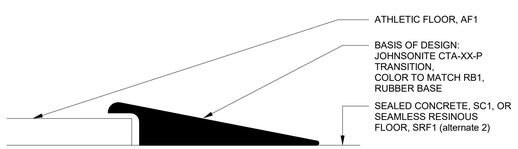

4 FLOORING TRANSITION DETAIL

0" 1/2" 1" 12" = 1'-0"

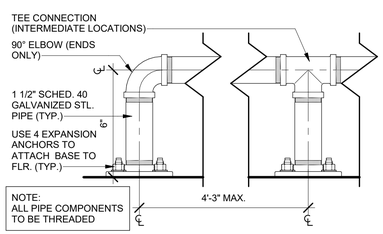

5 SIT-UP BAR DETAIL

0' 1" 2" 3" 6" 3" = 1'-0"

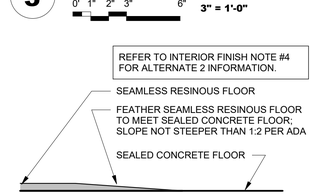

6 ALTERNATE 2 - FLOORING TRANSITION

0" 1/2" 1" 12" = 1'-0"

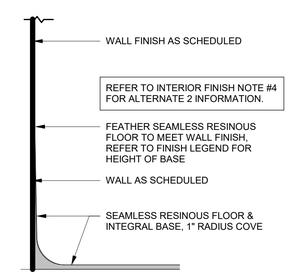

7 ALTERNATE 2 - COVE BASE DETAIL

0' 1' 2' 3' 1/2" = 1'-0"

STATE OF MISSOURI
MIKE PARSON,
GOVERNOR

STATE OF MISSOURI
RYAN P. KREMER
NUMBER A-2016015514
07/02/2020
ARCHITECT

BID DOCUMENTS

GLMVArchitecture
9229 Ward Parkway, Kansas City, MO 64114
Tel: (816) 444-4200
www.glmv.com
GLMV Architecture, Inc
MO State Certificate of Authority #F00364807
Corporate State of MO Licensee #000305

OFFICE OF ADJUTANT GENERAL
DIVISION OF FACILITIES MANAGEMENT, DESIGN AND CONSTRUCTION
DEPARTMENT OF PUBLIC SAFETY
Missouri Army National Guard

Camp Clark Training Site

18159 South K Highway
Nevada, Missouri 64772

FITNESS CENTER - STORM SHELTER

PROJECT # T1930-01
SITE # 6275
ASSET # 8136274078

REVISION:
DATE:
REVISION:
DATE:
REVISION:
DATE:
ISSUE DATE: 07/02/2020

CAD DWG FILE:

DRAWN BY: JSP
CHECKED BY: RPK
DESIGNED BY: GLMV

SHEET TITLE:
FINISH SCHED., EQUIPMENT PLAN & DETAILS

SHEET NUMBER:
I-101

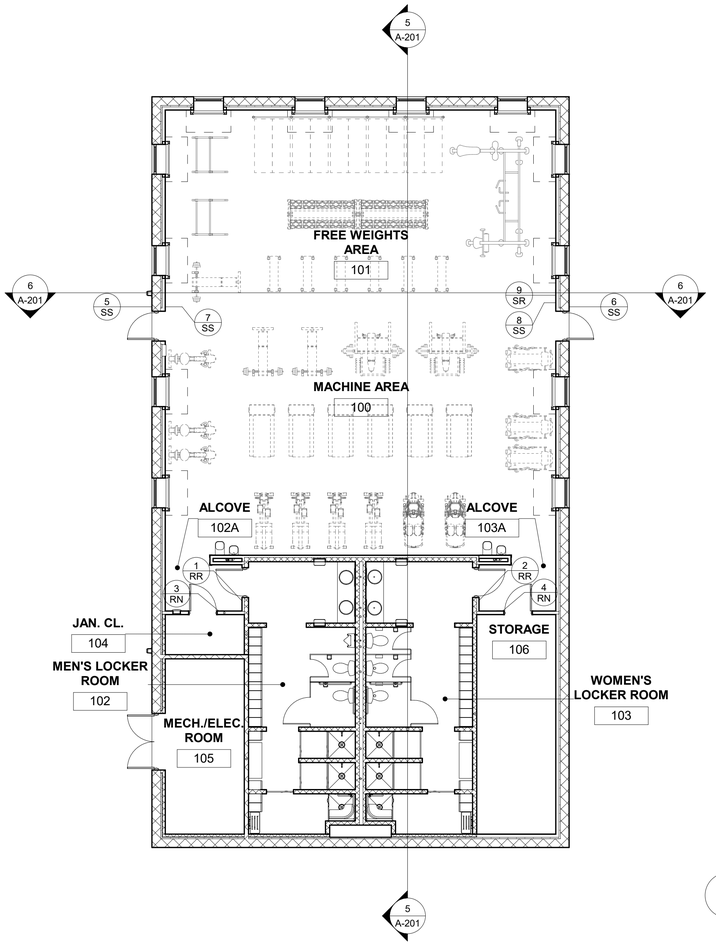

1 SIGNAGE PLAN

0' 4' 8' 12' 1/8" = 1'-0"

NORTH
PLAN TRUE

SIGN NO.
SIGN TYPE

SIGNAGE SCHEDULE

SIGN NO.	ROOM NO.	SIGN TYPE	SIGN COPY	ICON
1	102	RR	MEN	A & B
2	103	RR	WOMEN	A & C
3	104	RN	JANITOR	-
4	106	RN	STORAGE	-
5	-	SS	TORNADO SHELTER	-
6	-	SS	TORNADO SHELTER	-
7	101	SS	TORNADO SHELTER	-
8	101	SS	TORNADO SHELTER	-
9	101	SR	TORNADO SAFE ROOM; SEE 'INFORMATIONAL TEXT' ON SIGN FOR ADDITIONAL SIGN COPY	-

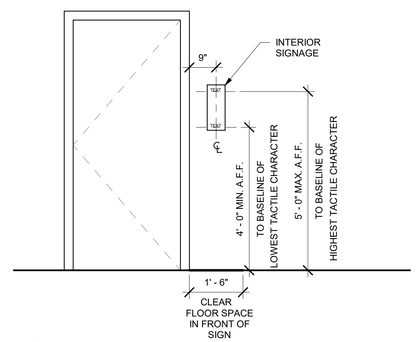

NOTE:
INSTALL INTERIOR SIGNS THAT IDENTIFY ROOMS ON THE WALL ADJACENT TO THE LATCH SIDE OF THE DOOR.
IF THERE IS NOT ADAQUATE SPACE ADJACENT TO THE LATCH SIDE OF THE DOOR ON THE WALL, MOUNT THE SIGN ON THE DOOR. CENTER THE SIGN ALONG THE WIDTH OF THE DOOR AND MOUNT AS THE SAME HEIGHTS AS INDICATED ABOVE.

MOUNT WITH CONCEALED ANCHORS, PER MANUFACTURER'S STANDARD METHOD FOR SUBSTRATE. SIGN PANEL SHALL REMAIN FLAT UNDER INSTALLED CONDITIONS AS INDICATED AND WITHIN A TOLERANCE OF +/- 1/16" MEASURED DIAGONALLY FROM CORNER TO CORNER.

2 SIGNAGE - TYP. MOUNTING HEIGHT

0' 1' 2' 3' 1/2" = 1'-0"

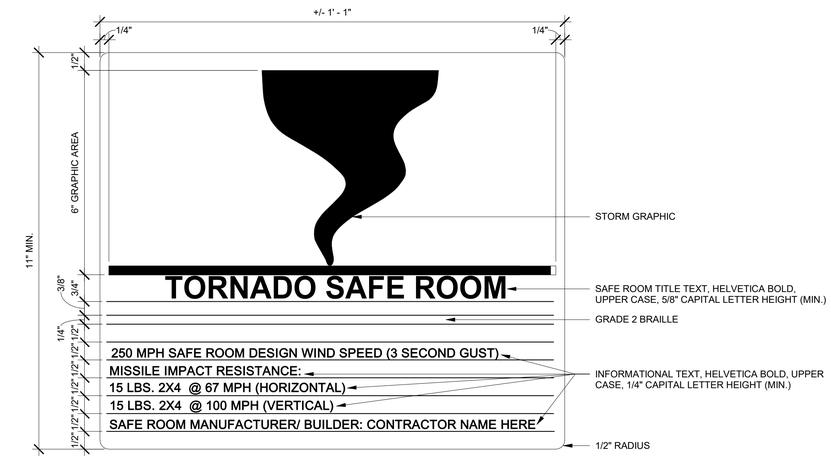

NOTE:
'SAFE ROOM TITLE TEXT' TO BE UPPERCASE HELVETICA BOLD, CENTERED WITH ACCOMPANYING GRADE TWO BRAILLE.
TEXT & ICON TO BE RAISED 1/32". BRAILLE TO BE DOMED.

'INFORMATIONAL TEXT' TO BE UPPERCASE HELVETICA BOLD, LEFT ALIGNED.
CONFIRM ALL TEXT WITH OWNER. CONFIRM WIND SPEEDS AND IMPACT RESISTANCE WITH ARCHITECT. CONFIRM BUILDER NAME WITH CONTRACTOR.

3 SIGNAGE SR- SAFE ROOM

0' 4' 8' 12' 6" = 1'-0"

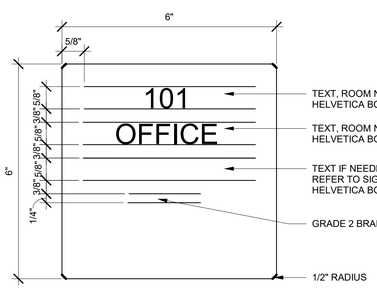

NOTE:
TEXT TO BE UPPERCASE HELVETICA BOLD, 5/8" CAPITAL LETTER HEIGHT, LEFT ALIGNED WITH ACCOMPANYING GRADE TWO BRAILLE.

TEXT TO BE RAISED 1/32". BRAILLE TO BE DOMED.

4 SIGNAGE RN - ROOM NAME

0" 3" 6" 9" 6" = 1'-0"

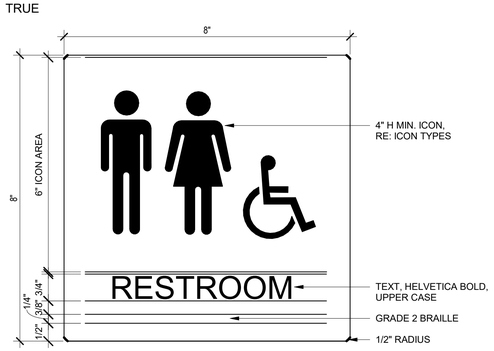

NOTE:
TEXT TO BE UPPERCASE HELVETICA BOLD, 5/8" CAPITAL LETTER HEIGHT, CENTERED WITH ACCOMPANYING GRADE TWO BRAILLE.

TEXT & ICON TO BE RAISED 1/32". BRAILLE TO BE DOMED.

5 SIGNAGE RR - RESTROOM

0" 3" 6" 9" 6" = 1'-0"

A. INTERNATIONAL SYMBOL OF ACCESSIBILITY

B. MEN/BOYS

C. WOMEN/GIRLS

NOTE:
IMAGES ILLUSTRATE GRAPHIC PROPORTIONS ONLY.
REFER TO SIGN TYPE FOR ICON HEIGHTS REQUIRED.

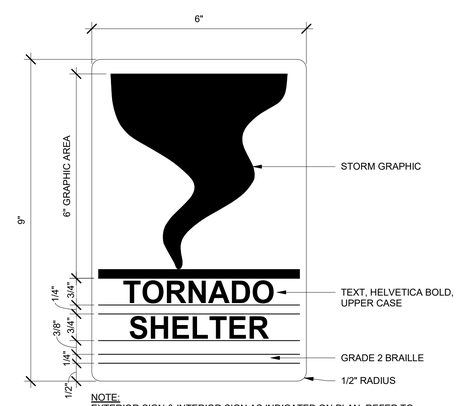

NOTE:
EXTERIOR SIGN & INTERIOR SIGN AS INDICATED ON PLAN. REFER TO SIGNAGE SPECIFICATION FOR MATERIALS.

TEXT TO BE UPPERCASE HELVETICA BOLD, 5/8" CAPITAL LETTER HEIGHT, CENTERED WITH ACCOMPANYING GRADE TWO BRAILLE.

TEXT & ICON TO BE RAISED 1/32". BRAILLE TO BE DOMED.

6 SIGNAGE SS- STORM SHELTER

0' 4' 8' 12' 6" = 1'-0"

SIGNAGE GENERAL NOTES

A. CONFIRM ALL SIGNAGE TYPES, PLACEMENT & SIGNAGE COPY WITH OWNER.

B. DIMENSIONS SHOWN REFLECT FACE PLATE ONLY.

C. THE MOUNTING LOCATION OF INTERIOR SIGNS SHOULD BE ARRANGED SO THAT A PERSON CAN APPROACH WITHIN 75MM (3") OF SIGN WITHOUT ENCOUNTERING PROTRUDING OBJECTS OR A DOOR SWING.

D. SIGNAGE COLOR TO BE DETERMINED. SIGNAGE COLOR IS INTENDED TO MATCH RUBBER BASE, RB1, & DOOR FRAME PAINT COLOR, P4. COPY & GRAPHICS TO BE A CONTRASTING COLOR THAT IS TO BE DETERMINED. THE PREFERRED COLOR ARRANGEMENT IS LIGHT COLORED CHARACTERS OR SYMBOLS ON A DARK BACKGROUND.

E. REFER TO TYPICAL MOUNTING HEIGHT DETAIL FOR SIGNAGE INSTALLATION INFORMATION.

F. EXTERIOR SIGNAGE SHALL BE FABRICATED FROM CAST OR CUT OUT ALUMINUM, BRONZE OR STAINLESS STEEL.

G. SIGNAGE SHALL BE INSTALLED WITH APPROPRIATE CONCEALED FASTENERS FOR RESPECTIVE SUBSTRATES. EXTERIOR SIGNAGE SHALL BE FIRMLY ANCHORED TO THE BUILDING SURFACE.

STATE OF MISSOURI
MIKE PARSON, GOVERNOR

STATE OF MISSOURI
RYAN P. KREMER
NUMBER A-2016015514
07/02/2020
ARCHITECT

BID DOCUMENTS

GLMVArchitecture
9229 Ward Parkway, Kansas City, MO 64114
Tel: (816) 444-4200
www.glmv.com
GLMV Architecture, Inc
MO State Certificate of Authority #F00364807
Corporate State of MO Licensee #000305

OFFICE OF ADJUTANT GENERAL
DIVISION OF FACILITIES MANAGEMENT, DESIGN AND CONSTRUCTION
DEPARTMENT OF PUBLIC SAFETY
Missouri Army National Guard

Camp Clark Training Site

18159 South K Highway
Nevada, Missouri 64772

FITNESS CENTER - STORM SHELTER

PROJECT # T1930-01
SITE # 6275
ASSET # 8136274078

REVISION:
DATE:
REVISION:
DATE:
REVISION:
DATE:
ISSUE DATE: 07/02/2020

CAD DWG FILE:

DRAWN BY: JSP
CHECKED BY: RPK
DESIGNED BY: GLMV

SHEET TITLE:
SIGNAGE PLAN, SCHEDULE & DETAILS

SHEET NUMBER:
I-111

SYMBOLS

PIPING

- DIRECTION OF FLOW
- UNION
- FLANGE CONNECTION
- CAP
- ELBOW UP
- ELBOW DOWN
- TEE UP
- TEE DOWN
- PIPE REDUCER
- PIPE GUIDE
- PIPE ANCHOR
- EXPANSION JOINT
- SHUT-OFF VALVE
- CHECK VALVE
- BALANCING VALVE WITH PRESSURE PORTS
- TRIPLE DUTY VALVE
- STRAINER
- STRAINER WITH BLOWOFF
- RELIEF/SAFETY VALVE
- MANUAL AIR VENT
- SOLENOID VALVE
- THREE-WAY CONTROL VALVE
- TWO-WAY CONTROL VALVE
- PRESSURE REDUCING VALVE
- PRESSURE GAUGE
- THERMOMETER
- FS-1 FLOOR SINK
- FD-1 FLOOR DRAIN
- RD-1 ROOF DRAIN
- HB-1 HOSE BIBB
- CO FLOOR/GRADE CLEANOUT
- CO WALL CLEANOUT
- CO END OF LINE CLEANOUT

DUCTWORK

- AHU 1 EQUIPMENT TYPE AND NUMBER
- PUMP
- LINEAR SLOT DIFFUSER
- FLEXIBLE DUCT
- NEGATIVE PRESSURE AIR DUCT UP
- NEGATIVE PRESSURE AIR DUCT DOWN
- POSITIVE PRESSURE AIR DUCT UP
- POSITIVE PRESSURE AIR DUCT DOWN
- DUCT RISE OR DROP IN THE DIRECTION OF AIRFLOW SQUARE TO ROUND TRANSITION
- ROUND DUCT UP, DOWN
- ELBOW WITH TURNING VANES
- FLEXIBLE CONNECTION
- MANUAL BALANCE DAMPER
- M MOTORIZED CONTROL DAMPER
- F FIRE DAMPER
- S SMOKE DAMPER
- FS FIRE/SMOKE DAMPER
- BD BACKDRAFT DAMPER
- SPIN-IN BRANCH DUCT CONNECTOR- WITH DAMPER IF SHOWN
- HIGH EFFICIENCY BRANCH DUCT CONNECTOR- WITH DAMPER IF SHOWN
- SUPPLY AIR DIFFUSER
- DUCT MOUNTED GRILLE/WALL GRILLE
- RETURN GRILLE
- NOISE REDUCING RETURN AIR TRANSFER
- SUPPLY DIFFUSER - THREE-WAY THROW
- B1 DIFFUSER, GRILLE, OR REGISTER TYPE
- 100 CFM
- 6" CONNECTION SIZE

POWER EQUIPMENT

- ELECTRICAL DISTRIBUTION PANEL, SWITCHBOARD, OR MOTOR CONTROL
- PANEL BOARD
- LOAD CENTER
- M METER
- J-BOX
- MOTOR
- DISCONNECT SWITCH
- VARIABLE FREQUENCY DRIVE
- COMBINATION DISCONNECT SWITCH AND MOTOR STARTER
- MAGNETIC MOTOR STARTER, NEMA SIZE AS NOTED
- HOME RUN
- CONCEALED CONDUIT
- CONDUIT BELOW SLAB
- ONE HOT, ONE NEUTRAL, AND ONE GROUND IN CONCEALED CONDUIT (#12 In 1/2" C. U.N.O.)
- EXPOSED CONDUIT
- CONDUIT TURNING DOWN
- CONDUIT TURNING UP

FIRE ALARM

- FACP FIRE ALARM CONTROL PANEL
- FAA ANNUNCIATOR PANEL
- FA FIRE ALARM POWER EXTENDER
- P PULL STATION
- K KNOX BOX
- R CONTROL RELAY
- S^1 SINGLE STATION SMOKE DETECTOR
- S^2 SMOKE DETECTOR (SUP. RELAY BASE)
- S^3 SYSTEM SMOKE DETECTOR
- S BEAM DETECTOR
- H HEAT/THERMAL DETECTOR
- D DUCT SMOKE DETECTOR
- MAGNETIC DOOR HOLD
- HORN/STROBE
- STROBE
- SPEAKER/STROBE
- SPEAKER
- HORN
- T VALVE TAMPER SWITCH
- F FLOW SWITCH

GENERAL

- HEAVY LINEWEIGHT INDICATES NEW WORK
- 2 CONSTRUCTION NOTE
- 2 REVISION NUMBER
- 1 M201 SECTION CUT THROUGH DRAWING
- 1 M201 AREA OF ENLARGEMENT
- 1 M201 PLAN NUMBER / SHEET WHERE ENLARGED PLAN IS DRAWN

THIS IS A MASTER LEGEND. NOT ALL SYMBOLS, ABBREVIATIONS, ETC. ARE USED ON THE DRAWINGS.

TEMPERATURE CONTROLS

- T TEMPERATURE SENSOR/THERMOSTAT SERVING AHU-1
- H HUMIDITY SENSOR/HUMIDISTAT
- T REMOTE TEMPERATURE SENSOR
- H REMOTE HUMIDITY SENSOR
- CO2 CARBON DIOXIDE SENSOR
- OCC OCCUPANCY SENSOR
- CO CARBON MONOXIDE SENSOR
- SP STATIC PRESSURE SENSOR
- DPT DIFFERENTIAL PRESSURE TRANSMITTER
- FM FLOW METER

WIRING DEVICES & OUTLETS

- SIMPLEX RECEPTACLE
- DUPLEX RECEPTACLE
- G GROUND FAULT INTERRUPTER
- WP WEATHERPROOF GROUND FAULT INTERRUPTER DUPLEX RECEPTACLE
- USB DUPLEX RECEPTACLE WITH USB OUTLETS
- TR TAMPER RESISTANT RECEPTACLE
- QUAD RECEPTACLE
- HEAVY DUTY RECEPTACLE-NEMA TYPE AS NOTED
- FLOOR MOUNTED DEVICE
- CEILING MOUNTED DEVICE
- ISOLATED GROUND DUPLEX RECEPTACLE
- ISOLATED GROUND QUAD RECEPTACLE
- CONTROLLED RECEPTACLE
- W WALL MOUNTED PHONE
- 48 48 CENTER OF DEVICE AT 48" A.F.F.
- C C DEVICE MOUNTED ABOVE COUNTER
- DATA OUTLET
- TELEPHONE/DATA OUTLET
- CABLE T.V. OUTLET
- S SWITCH, SPST U.N.O.
- S^2 SWITCH, DPST
- S^3 3-WAY SWITCH
- S^4 4-WAY SWITCH
- S^D DIMMER SWITCH
- S^M MOTOR RATED SWITCH
- S^{WP} SWITCH WITH WEATHERPROOF COVER
- TS TIME SWITCH
- PUSH BUTTON
- P PHOTOCELL SWITCH
- O OCCUPANCY SENSOR (TYPE INDICATED ON DWG)

PLUMBING

- WASTE LINE-ABOVE GRADE
- GW GREASE WASTE LINE-ABOVE GRADE
- WASTE LINE-BELOW GRADE
- VENT LINE
- DOMESTIC COLD WATER
- DOMESTIC HOT WATER
- T DOMESTIC TEMPERED HOT WATER
- DOMESTIC HOT WATER RECIRC.
- 140 140 DEGREE DOMESTIC HOT WATER

LIGHTING

- WALL WASHER LIGHTING FIXTURE, ARROW INDICATES DIRECTION
- LIGHT FIXTURE AND TYPE
- EMERGENCY LIGHT FIXTURE
- NIGHT LIGHT FIXTURE
- LIGHT FIXTURE AND TYPE
- LIGHT FIXTURE AND TYPE
- WALL MOUNTED FIXTURE
- WALL SCONCE
- WALL MOUNTED FIXTURE
- EXIT LIGHT CLG. MNTD. (SGL. FACE)
- EXIT LIGHT CLG. MNTD. (DBL. FACE)
- EXIT LIGHT WALL MNTD. (SGL. FACE)
- EXIT/EMERGENCY LIGHT
- EMERGENCY LIGHT

FIRE PROTECTION

- FP FIRE PROTECTION PIPING
- FIRE DEPARTMENT CONNECTION

ABBREVIATIONS

A	AMPS; AIR (COMPRESSED)
A/C	AIR CONDITIONING
AF	AMPERE FUSE
AFC	ABOVE FINISHED CEILING
AFEA	AREA FOR EVACUATION ASSISTANCE
AFF	ABOVE FINISHED FLOOR
AFG	ABOVE FINISHED GRADE
AHU	AIR HANDLING UNIT
AIC	AMPERE INTERRUPTING CURRENT
AL	ALUMINUM
APD	AIR PRESSURE DROP
ATS	AUTOMATIC TRANSFER SWITCH
AV	ACID VENT
AW	ACID WASTE
AWG	AMERICAN WIRE GAUGE
BCU	BLOWER COIL UNIT
BFP	BACKFLOW PREVENTER
BHP	BRAKE HORSEPOWER
BFF	BELOW FINISHED FLOOR
BOD	BOTTOM OF DUCT
B.O.D.	BASIS OF DESIGN
BOP	BOTTOM OF PIPE
BOS	BOTTOM OF STRUCTURE
BTUH	BRITISH THERMAL UNITS PER HOUR
C	CONDUIT
CT	CURRENT TRANSFORMER
CATV	CABLE TELEVISION SYSTEM
CAV	CONSTANT AIR VOLUME
CCTV	CLOSED CIRCUIT TELEVISION
CD	CONDENSATE DRAIN
CFCI	CONTRACTOR FURNISHED, CONTRACTOR INSTALLED
CFH	CUBIC FEET PER HOUR
CFM	CUBIC FEET PER MINUTE
CH	CHILLER
CO	CLEANOUT, CARBON MONOXIDE
CO2	CARBON DIOXIDE
CT	COOLING TOWER
CTR	COOLING TOWER RETURN
CTS	COOLING TOWER SUPPLY
CU	COPPER; CONDENSING UNIT
CUH	CABINET UNIT HEATER
CW	COLD WATER
CWR	CHILLED WATER RETURN
CWS	CHILLED WATER SUPPLY
D	DRAIN
DDC	DIRECT DIGITAL CONTROL
DFU	DRAINAGE FIXTURE UNITS
DN	DOWN
DPDT	DOUBLE-POLE, DOUBLE-THROW
DPST	DOUBLE-POLE, SINGLE-THROW
DX	DIRECT EXPANSION
EA	EXHAUST AIR
EAT	ENTERING AIR TEMPERATURE
E/C	ELECTRICAL CONTRACTOR
EDB	ENTERING DRY BULB
EF	EXHAUST FAN
EJ	EXPANSION JOINT
ESFR	EARLY SUPPRESSION FAST RESPONSE
ESP	EXTERNAL STATIC PRESSURE
ETR	EXISTING TO REMAIN
EWB	ENTERING WET BULB
EWC	ELECTRIC WATER COOLER
FAA	FIRE ALARM ANNUNCIATOR
FACP	FIRE ALARM CONTROL PANEL
FBO	FURNISHED BY OTHERS
FCO	FLOOR CLEANOUT
FCU	FAN COIL UNIT
FD	FIRE DAMPER, FLOOR DRAIN
FF	FINISHED FLOOR
FGCO	FINISHED GRADE CLEANOUT
FL	FLOW LINE
FLA	FULL LOAD AMPS
F/C	FIRE PROTECTION CONTRACTOR
FTU	FAN TERMINAL UNIT
FVNR	FULL VOLTAGE, NON-REVERSING
G	GROUND FAULT CIRCUIT INTERRUPTER
G/C	GENERAL CONTRACTOR
GND	GROUND
GPH	GALLONS PER HOUR
GPM	GALLONS PER MINUTE
GW	GREASE WASTE
HB	HOSE BIBB
HCR	HOT/CHILLED WATER RETURN
HCS	HOT/CHILLED WATER SUPPLY
HD	HEAD, HUB DRAIN
HOA	HAND-OFF-AUTOMATIC
HP	HEAT PUMP
HPC	HIGH PRESSURE CONDENSATE
HPR	HEAT PUMP RETURN
HPS	HEAT PUMP SUPPLY, HIGH PRESSURE STEAM, HIGH PRESSURE SODIUM
HSTAT	HUMIDISTAT
HTG	HEATING
HTR	HEATER
HWR	HOT WATER RETURN
HWS	HOT WATER SUPPLY
ID	INSIDE DIAMETER
IE	INVERT ELEVATION
IG	ISOLATED GROUND
IN. WC	INCHES OF WATER COLUMN
INC.	INCANDESCENT
kcmil	1000 CIRCULAR MILS
KV	KILOVOLT
KVA	KILOVOLT-AMPS
KVAR	KILOVOLT-AMPS REACTIVE
KW	KILOWATT
KWH	KILOWATT-HOUR
L	LAVATORY
LAT	LEAVING AIR TEMPERATURE
LDB	LEAVING DRY BULB
LF	LINEAR FEET
LP	LOW PRESSURE
LPC	LOW PRESSURE STEAM CONDENSATE
LPG	LIQUIFIED PETROLEUM GAS (PROPANE)
LPS	LOW PRESSURE STEAM
LRA	LOCKED ROTOR AMPS
LWB	LEAVING WET BULB
LWT	LEAVING WATER TEMPERATURE
MBH	1000 BTU PER HOUR
M/C	MECHANICAL CONTRACTOR
MCA	MINIMUM CIRCUIT AMPACITY
MCC	MOTOR CONTROL CENTER
MCM	1000 CIRCULAR MILS
MD	MOTORIZED DAMPER
MDP	MAIN DISTRIBUTION PANEL
MFR	MANUFACTURER
MH	MANHOLE/METAL HALIDE
MLO	MAIN LUGS ONLY
MPC	MEDIUM PRESSURE CONDENSATE
MPS	MEDIUM PRESSURE STEAM
MS	MOTOR STARTER
MSB	MAIN SWITCHBOARD
MTD	MOUNTED
MAU	MAKE-UP AIR UNIT
N	NITROGEN
N/A	NOT APPLICABLE
NC	NOISE CRITERIA
NFWH	NON-FREEZE WALL HYDRANT
NIC	NOT IN CONTRACT
NO	NITROUS OXIDE
N/O N/C	NORMALLY OPEN, NORMALLY CLOSED
O	OXYGEN
OA	OUTSIDE AIR
OC	ON CENTER
OD	OUTSIDE DIAMETER
OFCI	OWNER FURNISHED, CONTRACTOR INSTALLED
ORD	OVERFLOW ROOF DRAIN
PA	PIPE ANCHOR
PCWR	PRIMARY CHILLED WATER RETURN
PCWS	PRIMARY CHILLED WATER SUPPLY
PCR	PUMPED CONDENSATE RETURN
PD	PRESSURE DROP (FEET OF WATER)
PH	PHASE
PHWR	PRIMARY HEATING WATER RETURN
PHWS	PRIMARY HEATING WATER SUPPLY
PNL	PANEL
PRV	PRESSURE REDUCING VALVE
PS	PULSE START
PSI	POUNDS PER SQUARE INCH
PSIA	POUNDS PER SQUARE INCH-ABSOLUTE
PSIG	POUNDS PER SQUARE INCH-GAUGE
PT	POTENTIAL TRANSFORMER
QTY	QUANTITY
R	REFRIGERANT
RA	RETURN AIR
RCP	REINFORCED CONCRETE PIPE
RD	ROOF DRAIN
REV	REVISION
RF	RETURN FAN
RH	RELATIVE HUMIDITY
RLA	RUNNING LOAD AMPS
RPM	REVOLUTIONS PER MINUTE
RTU	ROOF TOP UNIT
S	SINK, STEAM
SA	SUPPLY AIR
SAN	SANITARY SEWER
SCWR	SECONDARY CHILLED WATER RETURN
SCWS	SECONDARY CHILLED WATER SUPPLY
SD	SMOKE DAMPER, STORM DRAIN
SF	SUPPLY FAN
SHWR	SECONDARY HEATING WATER RETURN
SHWS	SECONDARY HEATING WATER SUPPLY
SPST	SINGLE-POLE,SINGLE-THROW
SP	STATIC PRESSURE
SQFT	SQUARE FOOT/SQUARE FEET
S/S	START/STOP
SS	SERVICE SINK, STAINLESS STEEL
ST	STORM DRAIN, SOUND TRAP, STEAM TRAP
STC	SOUND TRANSMISSION CLASS
STM	STEAM
SW	SOFT WATER
SWBD	SWITCHBOARD
T	TEMPERED WATER
TG	TEMPERATURE GAUGE
TDH	TOTAL DYNAMIC HEAD
TSP	TOTAL STATIC PRESSURE
TSTAT	THERMOSTAT
TL	TWISTLOCK
TU	TERMINAL UNIT
UF	UNDER FLOOR
UG	UNDER GROUND
UH	UNIT HEATER
UL	UNDERWRITERS LABORATORIES, INC.
UNO	UNLESS NOTED OTHERWISE
UPS	UNINTERRUPTIBLE POWER SUPPLY
V	VACUUM
VAC	VOLTS ALTERNATING CURRENT
VAV	VARIABLE AIR VOLUME
VCP	VITRIFIED CLAY PIPE
VD	VOLUME DAMPER
VFD	VARIABLE FREQUENCY DRIVE
VTR	VENT THROUGH ROOF
W	WATER SERVICE, WATTS
WB	WET BULB
WCO	WALL CLEANOUT
WC	WATER COLUMN, WATER CLOSET
WH	WALL HYDRANT
WPD	WATER PRESSURE DROP
WP	WEATHERPROOF
WT	WATERTIGHT, WEIGHT
XFMR	TRANSFORMER
XP	EXPLOSION-PROOF

STATE OF MISSOURI
MIKE PARSON,
GOVERNOR

STATE OF MISSOURI
CASEY JOHN STEINER
NUMBER
PE-2009035182
PROFESSIONAL ENGINEER

BID DOCUMENTS

GLMV Architecture
9229 Ward Parkway, Kansas City, MO 64114
Tel: (816) 444-4200
www.glmv.com
GLMV Architecture, Inc
MO State Certificate of Authority #F00364807

HOSS & BROWN ENGINEERS
15902 Midland Drive
Shawnee, Kansas 66217
913.362.9090 I mail@h-b-e.com
© Hoss & Brown Engineers 2019
MO Certificate of Authority: 01022

OFFICE OF ADJUTANT GENERAL
DIVISION OF FACILITIES MANAGEMENT, DESIGN AND CONSTRUCTION
DEPARTMENT OF PUBLIC SAFETY
Missouri Army National Guard

Camp Clark Training Site

18159 South K Highway
Nevada, Missouri 64772

FITNESS CENTER - STORM SHELTER

PROJECT # T1930-01
SITE # 6275
ASSET # 8136274078

REVISION:
DATE:
REVISION:
DATE:
REVISION:
DATE:
ISSUE DATE: 07/02/2020

CAD DWG FILE:

DRAWN BY: MEB
CHECKED BY: CJS
DESIGNED BY: MEB

SHEET TITLE:
SYMBOLS LEGEND

SHEET NUMBER:
MPE-101

07/02/2020

BID DOCUMENTS

GRILLE, REGISTER, & DIFFUSER SCHEDULE

NOTES:

1. GRILLE COLOR SHALL BE BLACK WHERE INSTALLED IN AREAS OF EXPOSED CEILING. COORDINATE WITH ARCHITECT'S CEILING PLAN.

GENERAL NOTES (APPLY TO ALL BELOW):

A. PROVIDE MOUNTING FRAME TO MATCH CEILING TYPE. VERIFY WITH ARCHITECT'S PLANS PRIOR TO ORDERING.
B. MAXIMUM NC OF 30 FOR ALL GRILLES, REGISTERS, AND DIFFUSERS.
C. WHERE NOT NOTED, DIFFUSER NECK SIZE SHALL BE THE SAME AS THE BRANCH DUCT SIZE.
D. UNLESS NOTED OTHERWISE, COLOR SHALL BE STANDARD WHITE.
E. FOUR-WAY THROW PATTERN FOR SQUARE DIFFUSERS UNLESS NOTED OTHERWISE.

MARK	MANUFACTURER	MODEL	SERVICE	FACE SIZE	NECK SIZE	DAMPER	NOTES
E1	TITUS (B.O.D.)	PAR-AA (B.O.D.)	EXHAUST	24x24	"SEE PLAN"	NO	
E2	TITUS (B.O.D.)	PAR (B.O.D.)	EXHAUST	12x12	"SEE PLAN"	NO	
R1	TITUS (B.O.D.)	PAR (B.O.D.)	RETURN	24x24	22x22	NO	
R2	TITUS (B.O.D.)	350RL (B.O.D.)	RETURN	NECK + 1.75"	48x12	NO	1
S1	TITUS (B.O.D.)	OMNI-AA (B.O.D.)	SUPPLY	24x24	"SEE PLAN"	YES	
S2	TITUS (B.O.D.)	300RL (B.O.D.)	SUPPLY	NECK + 1.75"	"SEE PLAN"	YES	1
S3	TITUS (B.O.D.)	S300FL (B.O.D.)	SUPPLY	NECK + 1.5"	"SEE PLAN"	YES	1
T1	TITUS (B.O.D.)	PAR (B.O.D.)	TRANSFER	12x12	10x10	NO	

FAN SCHEDULE

NOTES:

1. PROVIDE WITH FACTORY INSTALLED AND WIRED DISCONNECT.
2. PROVIDE MANUFACTURER'S BACKDRAFT DAMPER.
3. PROVIDE MANUFACTURER'S FAN SPEED CONTROLLER, FACTORY MOUNTED AND WIRED.

MARK	MANUFACTURER	MODEL	CFM	S.P.	DRIVE	BHP	HP	RPM	dBA	V/PH	NOTES
EF-1	LOREN COOK (B.O.D.)	GN-642 (B.O.D.)	425	0.25	DIRECT	137 W	-	1248	44	120/1	1,2,3
EF-2	LOREN COOK (B.O.D.)	100SQN28D-VF (B.O.D.)	1045	0.5	DIRECT	0.324	1/2	2222	65	120/1	1,2,3

LOUVER SCHEDULE

GENERAL NOTES (APPLY TO ALL BELOW):

A. PROVIDE MOUNTING FRAME TO MATCH CONSTRUCTION.
B. COLOR TO BE SELECTED BY ARCHITECT FROM MANUFACTURER'S STANDARD COLORS, REFER TO SPECIFICATIONS.
C. PROVIDE ALL FASTENERS, HANGERS, AND ASSOCIATED DEVICES REQUIRED FOR COMPLETE INSTALLATION.

MARK	MANUFACTURER	MODEL	SERVICE	SIZE W x H (IN.)	AIRFLOW CFM	MIN. FREE AREA (S.F.)	MAX. PD INCHES WC	NOTES
LV-1	RUSKIN (B.O.D.)	XP500 (B.O.D.)	INTAKE	24x24	440	1.24	0.10	
LV-2	RUSKIN (B.O.D.)	XP500 (B.O.D.)	EXHAUST	24x24	425	1.24	0.10	
LV-3	RUSKIN (B.O.D.)	XP500 (B.O.D.)	INTAKE	40x24	1045	2.38	0.10	

FURNACE AND CONDENSING UNIT SCHEDULE

NOTES:

1. ESP DOES NOT INCLUDE DIRTY FILTER PRESSURE DROP. ADD 0.5" TO INTERNAL PRESSURE DROP FOR DIRTY FILTERS FOR VARIABLE AIR VOLUME UNITS.
2. DISCONNECT TO BE PROVIDED AND INSTALLED BY ELECTRICAL CONTRACTOR.
3. PROVIDE UNIT WITH ATMOS AIR (B.O.D.) IONIZATION UNIT MODEL M1000 (B.O.D.) TO ACHIEVE SCHEDULED OUTSIDE AIR CFM. ORIENT IONIZATION UNIT IN ACCESSIBLE LOCATION IN SUPPLY AIR DUCT PER MANUFACTURER'S REQUIREMENTS FOR OPTIMAL ION DISTRIBUTION. PROVIDE WITH MANUFACTURER'S AIR PRESSURE SWITCH TO ACTIVATE WHEN AIR HANDLER IS RUNNING.
4. PROVIDE UNIT WITH DUCT SMOKE DETECTOR IN RETURN AIR DUCT UPSTREAM OF OUTSIDE AIR CONNECTION. INTERLOCK DUCT DETECTOR WITH AIR HANDLING UNIT PER CODE TO SHUT DOWN AIR HANDLER WHEN SMOKE IS DETECTED. PROVIDE WITH A VISIBLE AND AUDIBLE SUPERVISORY SIGNAL AT ATTENDED LOCATION. ELECTRICAL CONTRACTOR SHALL PROVIDE NOTIFICATION EQUIPMENT.
5. INTERLOCK AIR HANDLING UNIT WITH MOTORIZED OUTSIDE AIR HANDLING UNIT. COORDINATE WITH ELECTRICAL CONTRACTOR PRIOR TO ROUGH IN.
6. PROVIDE WITH MANUFACTUER'S NEUTRALIZATION KIT.
7. PROVIDE UNIT WITH FIELD CONSTRUCTED WALL MOUNTING BRACKET.

GENERAL NOTES (APPLY TO ALL BELOW):

A. PROVIDE MINIMUM EFFICIENCY OF MERV 6 FOR FILTERS DURING CONSTRUCTION AND CHANGE MONTHLY AFTER UNIT START-UP. FINAL FILTER CHANGE AT OWNER OCCUPANCY SHALL BE MERV 8.
B. MAXIMUM BHP FOR FANS SHALL NOT EXCEED 90% OF THE MOTOR NAMEPLATE RATING AT OPERATING CONDITIONS.
C. AIR VELOCITY ACROSS THE COOLING COIL SHALL NOT EXCEED 500 FPM.
D. FUEL SOURCE FOR GAS HEATER IS NATURAL GAS.
E. PROVIDE A CONDENSATE DRAIN WITH A TRAP DEPTH 2" DEEPER THAN THE EXPECTED STATIC PRESSURE AT THE DRAIN LOCATION IN THE UNIT.

				SUPPLY FAN				GAS HEAT						CONDENSING UNITS						
MARK	MANUFACTURER	MODEL	MIN. O/A CFM	CFM	ESP	EAT DB/WB	LAT DB/WB	INPUT MBH	OUTPUT MBH	CONTROL STEPS	V/PH	MCA	MOCP	MARK	MODEL	SEER	V/PH	MCA	MOCP	NOTES
F-1	TRANE (B.O.D.)	4TXCD010+S9V2C (B.O.D.)	200	2000	0.5	79.5/65.8	55.0/53.2	100	97	2	120/1	13.9	20	CU-1	4TTR7060	16	208/1	37	60	1,2,3,4,5,6,7
F-2	TRANE (B.O.D.)	4TXCD010+S9V2C (B.O.D.)	200	2000	0.5	79.6/67.6	55.0/54.2	100	97	2	120/1	13.9	20	CU-2	4TTR7060	16	208/1	37	60	1,2,3,4,5,6,7
F-3	TRANE (B.O.D.)	4TXCB003+S9V2B (B.O.D.)	40	800	0.5	79.2/66.7	55.0/54.6	40	38.8	2	120/1	7.9	20	CU-3	4TTR6024	16	208/1	14	25	1,2,5,6,7

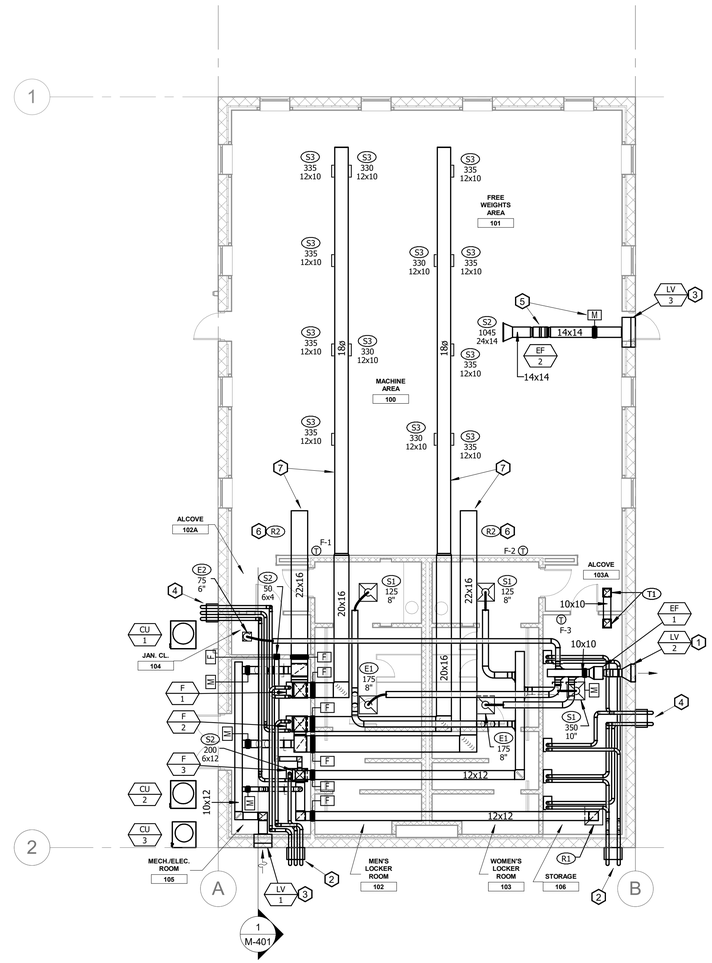

N

1 First Floor Mechanical Plan

Scale: 1/8" = 1'-0"

GENERAL NOTES:

A. THESE DRAWINGS ARE DIAGRAMMATIC AND INDICATE THE GENERAL EXTENT OF THE WORK. PROVIDE SHEET METAL SYSTEMS COMPLETE AND PER APPLICABLE CODES INCLUDING ALL NECESSARY OFFSETS, FITTINGS AND SPECIAL RADIUS OR MITRED ELBOWS WHICH ARE REQUIRED DUE TO SPACE CONSTRAINTS OR OTHER CONDITIONS.

B. COORDINATE THE INSTALLATION OF THE DUCTWORK AND EQUIPMENT WITH THE WORK OF ALL OTHER TRADES. VERIFY ALL CLEARANCES PRIOR TO THE FABRICATION OF ANY SYSTEM COMPONENTS.

C. DUCTWORK SHALL NOT BE LOCATED OVER ELECTRICAL EQUIPMENT OR PANELS. PROVIDE THE CODE REQUIRED WORKING CLEARANCE AROUND ALL ELECTRICAL EQUIPMENT AND PANELS.

D. PROVIDE ALL MISCELLANEOUS SUPPORTING STEEL, ETC. FOR THE PROPER INSTALLATION OF ALL MECHANICAL SYSTEMS.

E. COORDINATE FLOOR, WALL, ROOF PENETRATIONS, LOUVER SIZES, PAD LOCATIONS, ETC. WITH THE ARCHITECTURAL TRADES.

F. REFER TO ARCHITECTURAL REFLECTED CEILING PLANS AND WALL ELEVATIONS FOR EXACT LOCATION OF GRILLES, REGISTERS, AND DIFFUSERS.

G. DUCTWORK UPSTREAM OF SUPPLY TERMINAL UNITS SHALL BE BOX INLET SIZE UNLESS NOTED OTHERWISE. PROVIDE STRAIGHT DUCT AT TERMINAL INLET. STRAIGHT DUCT LENGTH SHALL BE A MINIMUM OF 1 1/2 TIMES THE DIAMETER OF THE INLET DUCT, OR GREATER AS RECOMMENDED BY MANUFACTURER.

H. DUCTWORK DOWNSTREAM OF SUPPLY TERMINAL UNITS SHALL BE BOX OUTLET SIZE UNLESS NOTED OTHERWISE.

I. BRANCH DUCTWORK TO DIFFUSERS, REGISTERS OR GRILLES SHALL BE NECK SIZE UNLESS NOTED OTHERWISE.

J. ALL DUCTWORK DIMENSIONS INDICATE THE INSIDE CLEAR DIMENSION.

K. PROVIDE ACCESS DOORS IN HARD CEILING AREAS FOR ACCESS TO TERMINAL UNITS, BALANCING DAMPERS, TERMINAL UNIT HEATING COIL PIPING, ETC. REFER TO ARCHITECTURAL DRAWINGS FOR CEILING TYPES. COORDINATE WITH THE ARCHITECTURAL TRADES.

PLAN NOTES:

1. 10x10 EXHAUST DUCT TO EXTREME WEATHER RATED LOUVER ON EXTERIOR WALL. MOUNT LOUVER AT 11'-4" ABOVE FINISHED GRADE. COORDINATE PENETRATION OF STORM SHELTER WALL WITH STRUCTURAL.

2. PROVIDE WALL VAULT/SHROUD AT 10'-8" ABOVE FINISHED GRADE, OR AS REQUIRED TO BE CENTERED BETWEEN STRUCTURAL BOND BEAMS IN EXTERIOR WALL. ROUTE COMBUSTION AIR DUCTS WITHIN WALL VAULT/SHROUD AS REQUIRED TO EXIT WALL VAULT/SHROUD ON EXTERIOR FACE AT 12" APART PER MANUFACTURER'S REQUIREMENTS. PROVIDE WALL VAULT/SHROUD WITH MANUFACTURER'S 90 DEGREE ELBOWS, SIZE AS REQUIRED TO ACCOMODATE INTAKE DUCTS. CONTRACTOR SHALL COORDINATE WITH WALL VAULT/SHROUD MANUFACTURER AND PROVIDE BIRDSCREENS AT DUCT OPENINGS. ALL COMPONENTS OF WALL VAULT/SHROUD ASSEMBLY SHALL BE BY THE SAME MANUFACTURER, BE 3RD PARTY TESTED TO MEET ICC-500 2014/FEMA P-361 MISSILE IMPACT RATING 250+ MPH FOR SAFE ROOM/STORM SHELTER APPLICATIONS, AND BE ISO 9001:2015 CERTIFIED. REFER TO DETAIL ON SHEET M-401.

3. PROVIDE 12" DEEP INSULATED DUCT PLENUM ON BACK OF INTAKE LOUVER. CONNECT DUCT INTO BACK OF PLENUM. MOUNT LOUVER AT 11'-4" ABOVE FINISHED GRADE. COORDINATE PENETRATION OF STORM SHELTER WALL WITH STRUCTURAL.

4. PROVIDE WALL VAULT/SHROUD AT 10'-8" ABOVE FINISHED GRADE, OR AS REQUIRED TO BE CENTERED BETWEEN STRUCTURAL BOND BEAMS IN EXTERIOR WALL. ROUTE EXHAUST FLUES WITHIN WALL VAULT/SHROUD AS REQUIRED TO EXIT WALL VAULT/SHROUD ON EXTERIOR FACE AT 12" APART PER MANUFACTURER'S REQUIREMENTS. PROVIDE WALL VAULT/SHROUD WITH MANUFACTURER'S 90 DEGREE ELBOWS, SIZE AS REQUIRED TO ACCOMODATE EXHAUST FLUES. CONTRACTOR SHALL COORDINATE WITH WALL VAULT/SHROUD MANUFACTURER AND PROVIDE BIRDSCREENS AT DUCT OPENINGS. ALL COMPONENTS OF WALL VAULT/SHROUD ASSEMBLY SHALL BE BY THE SAME MANUFACTURER, BE 3RD PARTY TESTED TO MEET ICC-500 2014/FEMA P-361 MISSILE IMPACT RATING 250+ MPH FOR SAFE ROOM/STORM SHELTER APPLICATIONS, AND BE ISO 9001:2015 CERTIFIED. REFER TO DETAIL ON SHEET M-401.

5. EXHAUST FAN EF-2 TO ONLY OPERATE IN EMERGENCY CONDITIONS. FAN SHALL ACTIVATE IF NORMAL POWER IS LOST. MOTORIZED DAMPER SHALL BE CLOSED DURING NON-EMERGENCY OPERATION. DAMPER SHALL FAIL OPEN IN CASE NORMAL POWER IS LOST.

6. MOUNT RETURN GRILLE ON SIDE OF RETURN DUCT.

7. ALL EXPOSED MECHANICAL DUCTWORK SHALL BE PAINTED BLACK TO MATCH CEILING. CONTRACTOR SHALL COORDINATE WITH ARCHITECT.

STATE OF MISSOURI
MIKE PARSON,
GOVERNOR

STATE OF MISSOURI
CASEY JOHN STEINER
NUMBER
PE-2005035182
PROFESSIONAL ENGINEER

BID DOCUMENTS

GLMVArchitecture
9229 Ward Parkway, Kansas City, MO 64114
Tel: (816) 444-4200
www.glmv.com
GLMV Architecture, Inc
MO State Certificate of Authority #F00364807

HOSS & BROWN ENGINEERS
15902 Midland Drive
Shawnee, Kansas 66217
913.362.9090 I mail@h-be.com
© Hoss & Brown Engineers 2019
MO Certificate of Authority: 01022

OFFICE OF ADJUTANT GENERAL
DIVISION OF FACILITIES MANAGEMENT, DESIGN AND CONSTRUCTION
DEPARTMENT OF PUBLIC SAFETY
Missouri Army National Guard

Camp Clark Training Site

18159 South K Highway
Nevada, Missouri 64772

FITNESS CENTER - STORM SHELTER

PROJECT # T1930-01
SITE # 6275
ASSET # 8136274078

REVISION:
DATE:
REVISION:
DATE:
REVISION:
DATE:
ISSUE DATE: 07/02/2020

CAD DWG FILE:

DRAWN BY: MEB
CHECKED BY: CJS
DESIGNED BY: MEB

SHEET TITLE:
MECHANICAL PLAN AND SCHEDULES

SHEET NUMBER:
M-101

07/02/2020

BID DOCUMENTS

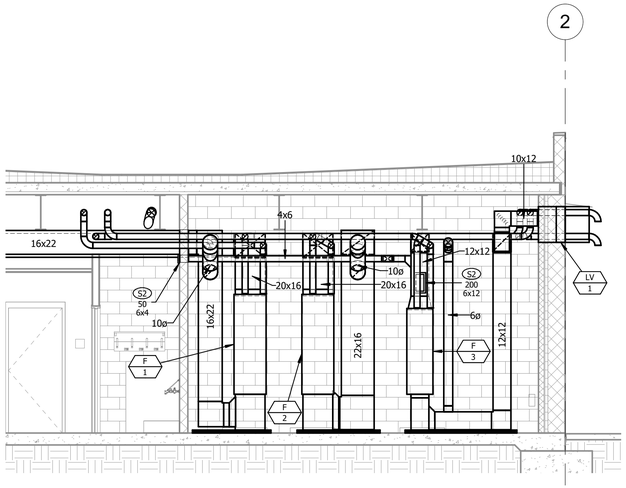

1 Mechanical Room

Scale: Not to Scale

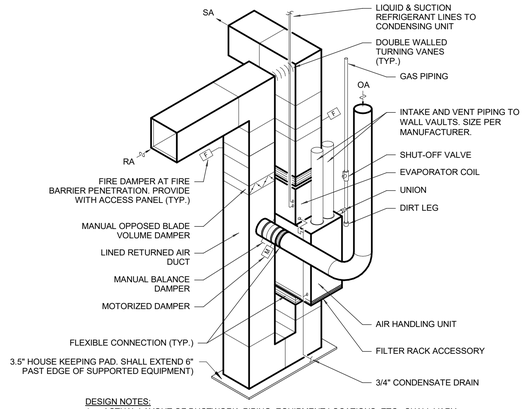

DESIGN NOTES:

1. ACTUAL LAYOUT OF DUCTWORK, PIPING, EQUIPMENT LOCATIONS, ETC., SHALL VARY BASED ON MANUFACTURER. COMPONENTS AND CONNECTIONS SUBJECT TO CHANGE PER MANUFACTURER'S REQUIREMENTS. AIR HANDLER & DUCTWORK SHALL BE SUPPORTED SEPARATELY.

4 Furnace Connection Detail

Scale: Not to Scale

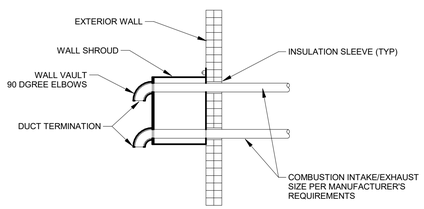

NOTES:

1. DUCT TERMINATIONS SHALL BE PROVIDED WITH BIRDSCREENS.
2. MANUFACTURER'S WALL PLATE SHALL MOUNT FLAT TO STORM SHELTER WALL.
3. MANUFACTURER'S 90 DEGREE ELBOWS SHALL BE OF SCHEDULE 40 BLACK STEEL.
4. MANUFACTURER'S ELBOWS SHALL ALLOW FOR PASS-THROUGH PROTECTION OF PIPING/DUCT.
5. WALL SHROUD ASSEMBLY SHALL BE VANDAL-PROOF.
6. MANUFACTURER SHALL BE ABLE TO PROVIDE CUSTOM SIZES AS REQUIRED.

2 Storm Shelter Wall Vault/Shroud Detail

Scale: Not to Scale

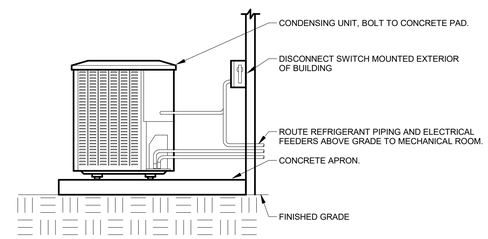

NOTES:

1. ARRANGEMENT SHOWN IN SCHEMATIC. REFER TO PLANS FOR LOCATION OF CONDENSING UNITS AND PIPE PENETRATIONS.
2. MOUNT DISCONNECT SWITCH A MINIMUM OF 3'-0" ABOVE GRADE.
3. INSTALL ALL EQUIPMENT IN STRICT ACCORDANCE WITH THE MANUFACTURER'S INSTALLATION INSTRUCTIONS.

5 Condensing Unit Installation Detail

Scale: Not to Scale

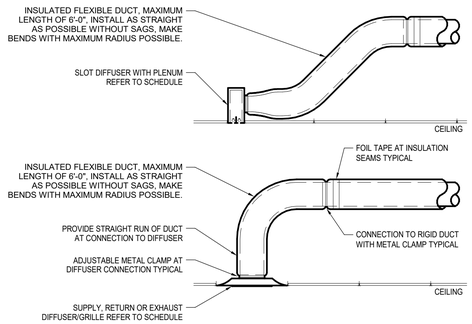

NOTES:

1. DUCT AND DIFFUSER SIZES SHALL BE AS INDICATED ON THE PLANS.
2. SUPPORT DUCTWORK PER SPECIFICATIONS.
3. COORDINATE CEILING TYPES WITH ARCHITECURAL PLANS.

3 Diffuser Connection

Scale: Not to Scale

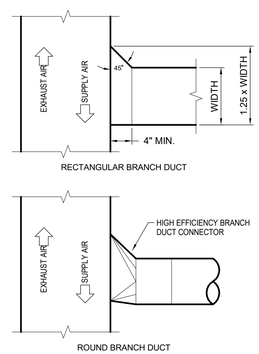

NOTES:

1. SUPPLY, RETURN AND EXHAUST FITTINGS ARE SIMILAR, ONLY DIRECTION OF AIRFLOW CHANGES.
2. REFER TO FLOOR PLANS FOR BRANCH LOCATIONS REQUIRING BALANCING DAMPERS.

6 Duct Branch Connection

Scale: Not to Scale

STATE OF MISSOURI
MIKE PARSON,
GOVERNOR

STATE OF MISSOURI
CASEY JOHN STEINER
NUMBER
PE-2009035182
PROFESSIONAL ENGINEER

BID DOCUMENTS

GLMV Architecture
9229 Ward Parkway, Kansas City, MO 64114
Tel: (816) 444-4200
www.glmv.com
GLMV Architecture, Inc
MO State Certificate of Authority #F00364807

HOSS & BROWN ENGINEERS
15902 Midland Drive
Shawnee, Kansas 66217
913.362.9090 I mail@h-be.com

© Hoss & Brown Engineers 2019
MO Certificate of Authority: 01022

OFFICE OF ADJUTANT GENERAL
DIVISION OF FACILITIES MANAGEMENT, DESIGN AND CONSTRUCTION
DEPARTMENT OF PUBLIC SAFETY
Missouri Army National Guard

Camp Clark Training Site

18159 South K Highway
Nevada, Missouri 64772

FITNESS CENTER - STORM SHELTER

PROJECT # T1930-01
SITE # 6275
ASSET # 8136274078

REVISION:
DATE:
REVISION:
DATE:
REVISION:
DATE:
ISSUE DATE: 07/02/2020

CAD DWG FILE:

DRAWN BY: MEB
CHECKED BY: CJS
DESIGNED BY: MEB

SHEET TITLE:
MECHANICAL DETAILS

SHEET NUMBER:
M-401

07/02/2020

BID DOCUMENTS

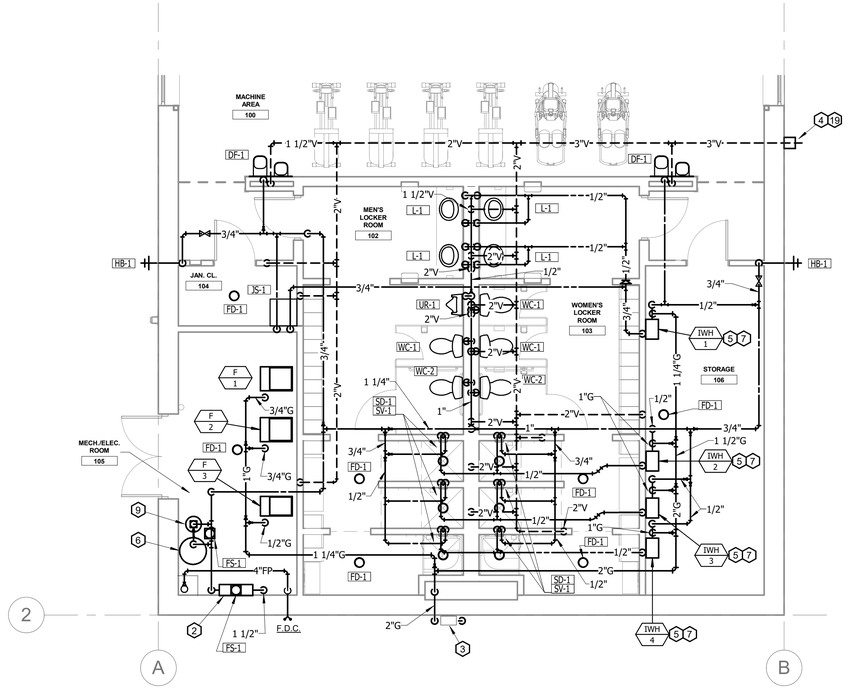

1 First Floor Above Grade Plumbing Plan

Scale: 3/16" = 1'-0"

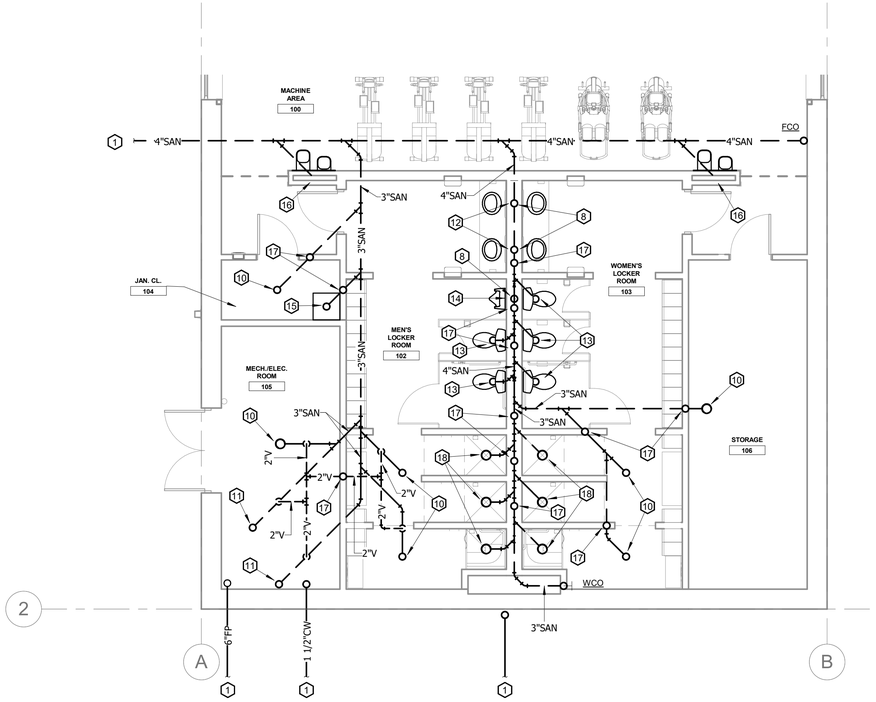

2 First Floor Below Grade Plumbing Plan

Scale: 3/16" = 1'-0"

PLAN NOTES:

1. REFER TO CIVIL PLANS FOR CONTINUATION.
2. DOMESTIC WATER SERVICE BACKFLOW PREVENTER.
3. NATURAL GAS METER AND SERVICE. BUILDING GAS LOAD = 616 CFH @ 7" WC. PROVIDE AN AUTOMATIC SEISMIC GAS SHUT-OFF VALVE IN GAS PIPING PRIOR TO ENTERING BUILDING, ON DOWNSTREAM SIDE OF GAS METER. CONTRACTOR SHALL COORDINATE INSTALLATION WITH VALVE MANUFACTURER.
4. 3" VENT THROUGH WALL. VENT TERMINAL SHALL NOT BE WITHIN 10'-0" OF AN OPERABLE OPENING INTO BUILDING. PROVIDE END OF VENT WITH BIRDSCREEN.
5. MOUNT WATER HEATER 1'-0" BELOW FINISHED CEILING. ROUTE DOMESTIC WATER PIPING ABOVE CEILING AS REQUIRED.
6. WATER SOFTENER BRINE TANK.
7. ROUTE CONDENSATE LINE DOWN WALL AND OVER TO NEAREST FLOOR DRAIN.
8. 1-1/2" VENT PIPE UP IN WALL. REFER TO ABOVE GRADE PLUMBING PLAN FOR CONTINUATION.
9. 50 GPM WATER SOFTENER. SEE DETAIL ON SHEET P401 FOR TYPICAL WATER SOFTENER CONNECTIONS.
10. 3" SANITARY LINE UP TO FLOOR DRAIN.
11. 3" SANITARY LINE UP TO FLOOR SINK.
12. 2" SANITARY LINE UP TO BACK-TO-BACK LAVATORIES.
13. SANITARY LINE UP TO WATER CLOSET. REFER TO PLUMBING FIXTURE SCHEDULE TO PIPE SIZE.
14. SANITARY LINE UP TO URINAL. REFER TO PLUMBING FIXTURE SCHEDULE TO PIPE SIZE.
15. SANITARY LINE UP TO JANITOR SINK. REFER TO PLUMBING FIXTURE SCHEDULE TO PIPE SIZE.
16. SANITARY LINE UP TO DRINKING FOUNTAIN. REFER TO PLUMBING FIXTURE SCHEDULE TO PIPE SIZE.
17. 2" VENT PIPE UP IN WALL. REFER TO ABOVE GRADE PLUMBING PLAN FOR CONTINUATION.
18. 3" SANITARY LINE UP TO SHOWER DRAIN.
19. PROVIDE WALL VAULT/SHROUD AT 11'-3" ABOVE FINISHED GRADE, OR AS REQUIRED TO BE CENTERED BETWEEN STRUCTURAL BOND BEAMS IN EXTERIOR WALL. ROUTE VENT PIPE WITHIN WALL VAULT/SHROUD AS REQUIRED TO EXIT WALL VAULT/SHROUD ON EXTERIOR FACE. PROVIDE WALL VAULT/SHROUD WITH MANUFACTURER'S EXIT SEALS WHERE PIPE EXITS WALL VAULT/SHROUD, SIZE AS REQUIRED TO ACCOMODATE VENT PIPES. VENT SHALL EXTEND 6" OUTSIDE OF WALL VAULT/SHROUD. CONTRACTOR SHALL COORDINATE WITH WALL VAULT/SHROUD MANUFACTURER. ALL COMPONENTS OF WALL VAULT/SHROUD ASSEMBLY SHALL BE BY THE SAME MANUFACTURER, BE 3RD PARTY TESTED TO MEET ICC-500 2014/FEMA P-361 MISSILE IMPACT RATING 250+ MPH FOR SAFE ROOM/STORM SHELTER APPLICATIONS, AND BE ISO 9001:2015 CERTIFIED. REFER TO DETAIL ON SHEET P-401.

GENERAL NOTES:

A. THESE DRAWINGS ARE DIAGRAMMATIC AND INDICATE THE GENERAL EXTENT OF THE WORK. PROVIDE PLUMBING SYSTEMS COMPLETE AND PER APPLICABLE CODES INCLUDING ALL NECESSARY COMPONENTS AND OFFSETS WHICH ARE REQUIRED DUE TO SPACE CONSTRAINTS OR OTHER CONDITIONS.

B. REFER TO THE ARCHITECTURAL PLANS FOR THE EXACT LOCATIONS OF PLUMBING FIXTURES.

C. COORDINATE THE INSTALLATION OF PLUMBING AND PIPING WITH THE WORK OF ALL OTHER TRADES.

D. WHERE WALL MOUNTED FLUSH VALVE SENSORS ARE USED, THE PLUMBING CONTRACTOR SHALL COORDINATE THE LOCATION OF THE SENSORS WITH THE ELECTRICAL AND ARCHITECTURAL TRADES TO AVOID CONFLICTS WITH GRAB BARS OR ANY OTHER ACCESSORIES.

E. PIPING SHALL NOT BE LOCATED OVER ELECTRICAL EQUIPMENT OR PANELS. PROVIDE THE CODE REQUIRED WORKING CLEARANCE AROUND ALL ELECTRICAL EQUIPMENT AND PANELS.

F. THE CONTRACTOR SHALL NOT LOCATE PIPING BELOW DUCT MOUNTED AIR TERMINAL UNITS, TERMINAL HEATING COILS, OR OTHER EQUIPMENT.

G. PROVIDE SUPPLEMENTARY STEEL AS REQUIRED FOR THE PROPER SUPPORT OF ALL PLUMBING SYSTEMS.

H. COORDINATE THE SHUT DOWN OF ANY EXISTING SERVICES AND/OR EQUIPMENT WITH THE OWNER'S REPRESENTATIVE.

I. PLUMBING VENT PIPING THROUGH THE ROOF SHALL BE LOCATED A MINIMUM OF 10'-0" AWAY FROM ANY FRESH AIR INTAKE LOCATION.

J. PROVIDE THE CODE REQUIRED CLEARANCE FOR ALL CLEANOUTS INSTALLED IN SANITARY WASTE AND VENT PIPING.

K. MINIMUM UNDERGROUND PIPE SIZE SHALL BE 2".

GENERAL FIRE PROTECTION NOTES:

A. PROVIDE A COMPLETE AUTOMATIC SPRINKLER SYSTEM TO SERVE THE ENTIRE BUILDING.

D. PROVIDE FIRE PROTECTION SYSTEM COMPLETE, PER APPLICABLE CODES, PER NFPA, AND PER REQUIREMENTS OF AUTHORITIES HAVING JURISDICTION.

E. INCLUDE ALL PIPING, OFFSETS, FITTINGS, DRAINS, VALVES, SUPPORTS, HEADS, ETC. AS REQUIRED FOR A COMPLETE OPERABLE SYSTEM.

F. SPRINKLER HEADS SHALL BE WHITE SEMI-RECESSED FOR AREAS WITH FINISHED CEILINGS. SPRINKLER HEADS SHALL BE ROUGH BRASS FOR AREAS WITH EXPOSED STRUCTURE. SPRINKLER HEADS IN CEILINGS, UNLESS FUNCTIONALLY IMPOSSIBLE, SHALL BE CENTERED WITH AND BETWEEN ROWS OF LIGHT FIXTURES. SPRINKLER HEADS IN MACHINE ROOMS SHALL BE 212F TEMPERATURE ACTIVATED.

G. PIPING IN AREAS HAVING FINISHED CEILINGS SHALL BE CONCEALED. SPRINKLER PIPING 2-1/2" AND LARGER MAY BE SCHEDULE 10 BLACK STEEL. SPRINKLER PIPING 2" AND SMALLER SHALL BE SCHEDULE 40 BLACK STEEL. MINIMUM PIPE SIZE SHALL BE 1".

H. PROVIDE AND INSTALL BACKFLOW PREVENTION EQUIPMENT AS REQUIRED BY LOCAL CODES. PROVIDE AND INSTALL FULL FLOW FIRE METER OR DETECTOR CHECK METER IF REQUIRED.

I. THE SYSTEMS SHALL BE DESIGNED BY A LICENSED FIRE PROTECTION ENGINEER AND INSTALLED BY A LICENSED SPRINKLER CONTRACTOR.

J. SEAL ALL FIRE PROTECTION FLOOR, WALL AND ROOF PENETRATIONS WATERTIGHT AND WEATHERTIGHT. CAULK AROUND FIRE PROTECTION PENETRATIONS WITH 3M CP-25 FIRE BARRIER CAULK (THICKNESS AS REQUIRED AND RECOMMENDED BY MANUFACTURER) TO MAINTAIN FIRE RESISTANCE RATING OF FIRE-RATED ASSEMBLIES.

K. COORDINATE ALL SCHEDULING AND WORK WITH OTHER TRADES SO AS TO PREVENT CONFLICTS, AND TO ENSURE ORDERLY PROGRESS OF THE WORK, WITH A MINIMUM OF DELAYS. WHERE SPRINKLER PIPING IS INSTALLED WITHOUT COORDINATING WITH OTHER TRADES AND CONFLICTS OCCUR, SPRINKLER PIPING SHALL BE RELOCATED AS REQUIRED AT NO ADDITIONAL COST TO THE OWNER TO RESOLVE THE CONFLICTS.

L. WHERE PIPING PASSES THROUGH WALLS, FLOORS, CEILINGS, OR OTHER BUILDING CONSTRUCTION, SLEEVES MUST BE USED. WHERE EXPOSED PIPING PASSES THROUGH FINISH WORK, CHROME PLATED OR OTHER FINISH ACCEPTABLE TO THE ARCHITECT, SPLIT WALL PLATES OR ESCUTCHEONS SHALL BE INSTALLED TO FIT SNUGLY AROUND THE PIPING. WHERE FINISH IS NOT A PROBLEM SUITABLE PLATES SHALL BE PROVIDED AT EACH HOLE TO ASSURE EFFECTIVENESS OF CONSTRUCTION AS A FIRE STOP.

STATE OF MISSOURI
MIKE PARSON,
GOVERNOR

STATE OF MISSOURI
CASEY JOHN STEINER
NUMBER
PE-2009035182
PROFESSIONAL ENGINEER

BID DOCUMENTS

GLMVArchitecture
9229 Ward Parkway, Kansas City, MO 64114
Tel: (816) 444-4200
www.glmv.com
GLMV Architecture, Inc
MO State Certificate of Authority #F00364807

HOSS & BROWN ENGINEERS
15902 Midland Drive
Shawnee, Kansas 66217
913.362.9090 I mail@h-b-e.com

© Hoss & Brown Engineers 2019
MO Certificate of Authority: 01022

OFFICE OF ADJUTANT GENERAL
DIVISION OF FACILITIES MANAGEMENT, DESIGN AND CONSTRUCTION
DEPARTMENT OF PUBLIC SAFETY
Missouri Army National Guard

Camp Clark Training Site

18159 South K Highway
Nevada, Missouri 64772

FITNESS CENTER - STORM SHELTER

PROJECT # T1930-01
SITE # 6275
ASSET # 8136274078

REVISION:
DATE:
REVISION:
DATE:
REVISION:
DATE:
ISSUE DATE: 07/02/2020

CAD DWG FILE:

DRAWN BY: MEB
CHECKED BY: CJS
DESIGNED BY: MEB

SHEET TITLE:
PLUMBING AND FIRE PROTECTION PLANS

SHEET NUMBER:
P-101

29 OF 33 SHEETS
07/02/2020

BID DOCUMENTS

PLUMBING FIXTURE SCHEDULE

NOTES:

1. FIXTURE IS ADA COMPLIANT. REFER TO ARCHITECTURAL DRAWINGS FOR ACTUAL MOUNTING HEIGHT.
2. FAUCET HOLES TO MATCH FAUCET SPECIFIED.
3. MOUNT WITH HANDICAPPED RECEPTOR RIM 34" ABOVE FLOOR.
4. PIPE SIZE AS SHOWN ON DRAWING.
5. COORDINATE SPUD SIZE WITH FLUSH VALVE SUPPLIED.
6. EQUIVALENT CARRIER BY WADE.
7. FIXTURE ASSEMBLY MUST BE APPROVED BY AN INSTALLED PER ADA.
8. PROVIDE OPERATING ROD ASSEMBLY PER MANUFACTURER'S RECOMMENDATIONS BASED ON WALL THICKNESS.
9. PROVIDE SURESEAL SSX000V INLINE FLOOR DRAIN TRAP SEAL WITH ASSE 1072 RATING.
10. PROVIDE WITH MANUFACTURER'S IN-WALL CARRIER ACCESSORY.

GENERAL NOTES:

A. PROVIDE INSULATION KIT ON ALL ADA FIXTURES WITH EXPOSED TRAP AND SUPPLIES.

MARK	DESCRIPTION	MANUFACTURER	MODEL	TRIM	CONNECTIONS				NOTES
					CW	HW	W	V	
WC-1	FLOOR MOUNTED FLUSH TANK WATER CLOSET	AMERICAN STANDARD (B.O.D.)	CADET 3 270AA.001 (B.O.D.)	CHURCH 9500C OPEN FRONT SEAT	1/2"	-	4"	2"	
WC-2	ADA FLOOR MOUNTED FLUSH TANK WATER CLOSET (B.O.D.)	AMERICAN STANDARD (B.O.D.)	CADET 3 270AA.001 (B.O.D.)	CHURCH 9500C OPEN FRONT SEAT	1/2"	-	4"	2"	7
UR-1	ADA WALL MOUNTED URINAL (B.O.D.)	AMERICAN STANDARD (B.O.D.)	TRIMBROOK 6561.017 (B.O.D.)	FLUSH VALVE: FV-1; CARRIER: C-1	3/4"	-	2"	1-1/2"	1,5,6,7
FV-1	URINAL FLUSH VALVE (B.O.D.)	SLOAN (B.O.D.)	ROYAL 186 (B.O.D.)	-	-	-	-	-	
L-1	INTEGRAL LAVATORY PER ARCHITECT	-	-	REFER TO ARCHITECTURAL DRAWINGS, FAUCET: F-1	-	-	2"	1-1/2"	2
JS-1	MOLDED STONE JANITOR'S SINK (B.O.D.)	FIAT (B.O.D.)	MSB-2424 (B.O.D.)	FAUCET: F-2; S/S BUMPERGUARDS, S/S WALL GUARDS	-	-	3"	1-1/2"	
DF-1	WALL HUNG BI-LEVEL DRINKING FOUNTAIN (B.O.D.)	ELKAY (B.O.D.)	EDFPVR217C (B.O.D.)	-	1/2"	-	2"	1-1/2"	1,3,7,10
F-1	ADA SINGLE LEVER LAVATORY FAUCET (B.O.D.)	AMERICAN STANDARD (B.O.D.)	RELIANT 7385.004 (B.O.D.)	0.5 GPM, VANDAL RESISTANT, GRID DRAIN, 4" CENTERS, MIXING VALVE: MV-1	1/2"	1/2"	-	-	7
F-2	JANITOR'S SINK FAUCET (B.O.D.)	AMERICAN STANDARD (B.O.D.)	8344.112 (B.O.D.)	VACUUM BREAKER, WALL BRACE, PAIL HOOK, 30" HOSE WITH WALL GRIP, MOP HANGER	3/4"	3/4"	-	-	7
SV-1	ADA SINGLE LEVER, PRESURE BALANCE, SHOWER FAUCET (B.O.D.)	SYMMONS (B.O.D.)	9605-XPLR (B.O.D.)	2.5 GPM, ORIGINS SHOWER SYSTEM	1/2"	1/2"	-	-	1,7
HB-1	NON-FREEZE WALL HYDRANT (B.O.D.)	WOODFORD (B.O.D.)	MODEL 65 (B.O.D.)	VACUUM BREAKER, LOOSE CONTROL KEY, WALL CLAMP	3/4"	-	-	-	8
FD-1	7" ROUND FLOOR DRAIN (B.O.D.)	ZURN (B.O.D.)	Z-415 (B.O.D.)	NICKEL BRONZE STRAINER, DEEP SEAL TRAP	-	-	3"	-	4,9
FS-1	12" FLOOR SINK (B.O.D.)	ZURN (B.O.D.)	Z-566 (B.O.D.)	NICKEL BRONZE STRAINER, DEEP SEAL TRAP, 1/2 GRATE	-	-	3"	-	4,9
SD-1	4" ROUND SHOWER DRAIN (B.O.D.)	ZURN (B.O.D.)	FD2250 (B.O.D.)	-	-	-	2"	-	4
MV-1	POINT-OF-USE MIXING VALVE (B.O.D.)	LEONARD (B.O.D.)	270-LF (B.O.D.)	0.25-12 GPM FLOW, ASSE 1017 CERTIFIED, LOW FLOW	-	-	-	-	4
C-1	WALL URINAL CARRIER (B.O.D.)	ZURN (B.O.D.)	Z-1221 (B.O.D.)	-	-	-	-	-	

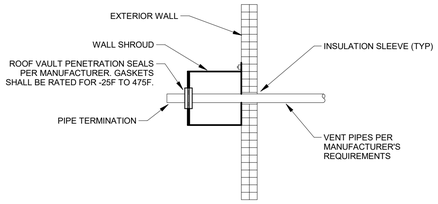

NOTES:
1. MANUFACTURER'S WALL PLATE SHALL MOUNT FLAT TO STORM SHELTER WALL.
2. MANUFACTURER'S PENETRATION SEALS SHALL ALLOW FOR PASS-THROUGH PROTECTION OF PIPING/DUCT.
3. WALL SHROUD ASSEMBLY SHALL BE VANDAL-PROOF.
4. MANUFACTURER SHALL BE ABLE TO PROVIDE CUSTOM SIZES AS REQUIRED.

1 Storm Shelter Wall Vault/Shroud Detail

Scale: Not to Scale

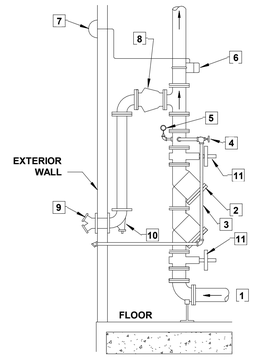

KEY

1. FIRE PROTECTION SERVICE
2. DOUBLE CHECK VALVE
3. MAIN DRAIN
4. MAIN DRAIN VALVE
5. PRESSURE GAUGE
6. FLOW SWITCH
7. ELECTRIC ALARM
8. CHECK VALVE
9. SIAMESE CONNECTION
10. BALL DRIP
11. SUPERVIZED OS&Y VALVES

ARRANGEMENT SHOWN IS SCHEMATIC. MODIFY TO SUIT MANUFACTURER'S STANDARDS, MEET LOCAL CODE REQUIREMENTS. ROUTE ALL DRAINS TO OUTSIDE AS SHOWN OR TO NEARBY FLOOR DRAIN.

2 Fire Department Water Entry

Scale: Not to Scale

INSTANTANEOUS WATER HEATER

NOTES:

1. PROVIDE DIELECTRIC CONNECTIONS AT WATER HEATER.
2. PROVIDE WITH GAS PRESSURE REGULATOR TO BRING GAS PRSSURE BELOW MANUFACTURER'S MAXIMUM PRESSURE OF 10.5" WC. ROUTE VENT FROM REGULATOR UP THROUGH ROOF AND SEAL PENETRATION WEATHERTIGHT.
3. PROVIDE WITH MANUFACTURER'S NEUTRALIZATION KIT.

MARK	MANUFACTURER	MODEL	CAPACITY (GAL)	INPUT (MBH)	V/PH	NOTES
IWH-1	A.O. SMITH (B.O.D.)	ACT-199I-N (B.O.D.)	-	199	120/1	1,2,3
IWH-2	A.O. SMITH (B.O.D.)	ACT-199I-N (B.O.D.)	-	199	120/1	1,2,3
IWH-3	A.O. SMITH (B.O.D.)	ACT-199I-N (B.O.D.)	-	199	120/1	1,2,3
IWH-4	A.O. SMITH (B.O.D.)	ACT-199I-N (B.O.D.)	-	199	120/1	1,2,3

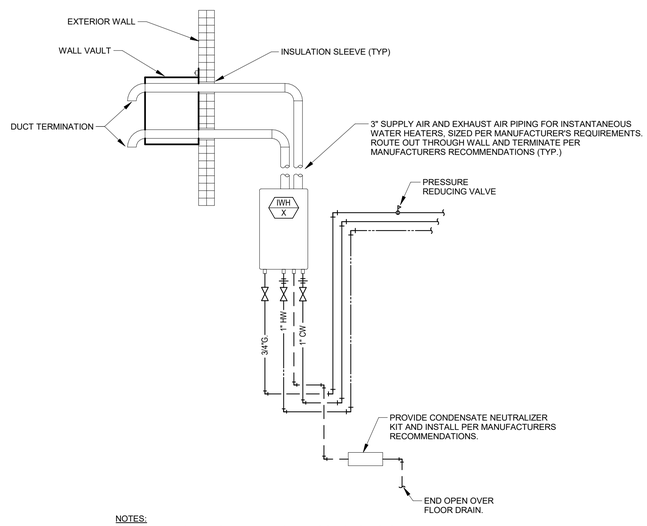

NOTES:
1. VERIFY EXACT PIPING PER MANUFACTURER'S SPECIFICATIONS.
2. CONCENTRIC VENT KIT SHALL INCLUDE RAIN CAP AND WYE CONCENTRIC FITTINGS.

3 Instantaneous Water Heater Detail

Scale: Not to Scale

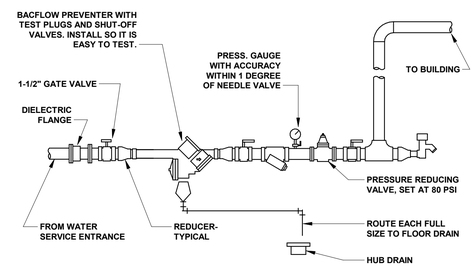

PROVIDE REDUCED PRESSURE BACKFLOW PREVENTER OF TYPE AND MANUFACTURER AS APPROVED BY LOCAL AUTHORITIES. INSTALL BFP IN HORIZONTAL UPRIGHT POSITION, UNLESS NOTED OTHERWISE. STRAINER AND REDUCING VALVES MAY BE INSTALLED IN VERTICAL PIPE IF SPACE LIMITATIONS REQUIRE. CLEAN STRAINER BEFORE TURNING BUILDINGS OVER TO OWNER. PROVIDE ANY REQUIRED CERTIFICATION TEST OF BFP TO LOCAL AUTHORITIES. ALL ITEMS SHALL BE APPROVED FOR DOMESTIC WATER SERVICE. ARRANGEMENT SHOWN IS SCHEMATIC. MODIFY TO SUIT CONDITIONS. INSTALL BFP SO IT CAN BE EASILY SERVICED AND TESTED. SUPPORT ASSEMBLY FROM WALL BRACKET OR FLOOR STAND.

4 Water Service Entrance

Scale: Not to Scale

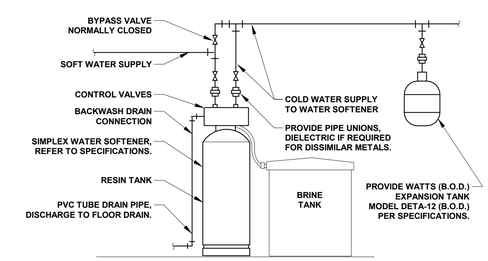

NOTES:
1. PIPING ARRANGEMENT SHOWN IS SCHEMATIC. ADJUST TO SUIT FIELD CONDITIONS. REFER TO FLOOR PLANS FOR PIPE SIZES.

5 Water Softner Detail

Scale: Not to Scale

STATE OF MISSOURI
MIKE PARSON,
GOVERNOR

STATE OF MISSOURI
CASEY JOHN STEPHEN
NUMBER
PE-2009035182
PROFESSIONAL ENGINEER

BID DOCUMENTS

GLMV Architecture
9229 Ward Parkway, Kansas City, MO 64114
Tel: (816) 444-4200
www.glmv.com
GLMV Architecture, Inc
MO State Certificate of Authority #F00364807

HOSS & BROWN ENGINEERS
15902 Midland Drive
Shawnee, Kansas 66217
913.362.9090 I mail@h-b-e.com

© Hoss & Brown Engineers 2019

MO Certificate of Authority: 01022

OFFICE OF ADJUTANT GENERAL
DIVISION OF FACILITIES MANAGEMENT, DESIGN AND CONSTRUCTION
DEPARTMENT OF PUBLIC SAFETY
Missouri Army National Guard

Camp Clark Training Site

18159 South K Highway
Nevada, Missouri 64772

FITNESS CENTER - STORM SHELTER

PROJECT # T1930-01
SITE # 6275
ASSET # 8136274078

REVISION:
DATE:
REVISION:
DATE:
REVISION:
DATE:
ISSUE DATE: 07/02/2020

CAD DWG FILE:

DRAWN BY: MEB
CHECKED BY: CJS
DESIGNED BY: MEB

SHEET TITLE:
PLUMBING SCHEDULES & DETAILS

SHEET NUMBER:
P-401

BID DOCUMENTS

PLAN NOTES:

1. ROUTE (3)#10 & #10GW IN 1" PVC CONDUIT.
2. ROUTE HOMERUN WITH (3)#10 & #10GW IN 1" PVC CONDUIT. ROUTE CIRCUIT THROUGH EXTERIOR LIGHTING CONTACTOR.

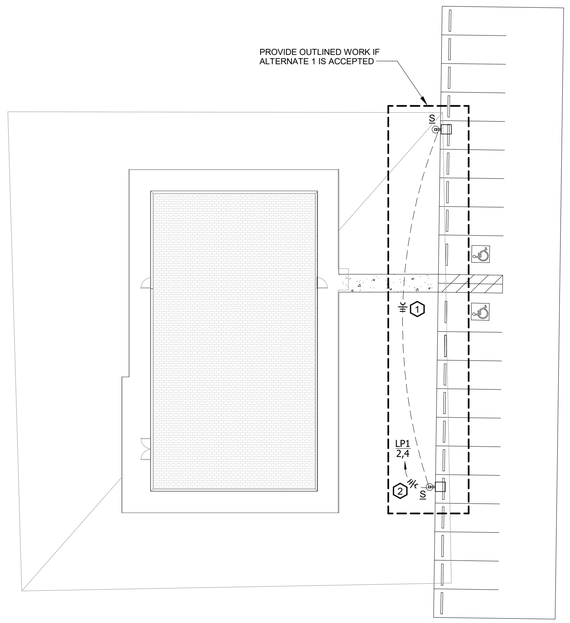

N

1 ELECTRICAL SITE PLAN

Scale: 1" = 20'-0"

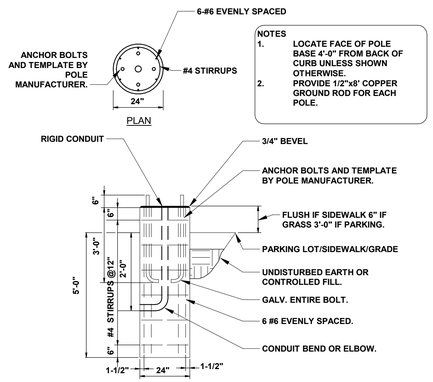

2 POLE BASE DETAIL

Scale: Not to Scale

STATE OF MISSOURI
MIKE PARSON,
GOVERNOR

STATE OF MISSOURI
CASEY JOHN STEINER
NUMBER
PE-2009035182
PROFESSIONAL ENGINEER

BID DOCUMENTS

GLMV Architecture
9229 Ward Parkway, Kansas City, MO 64114
Tel: (816) 444-4200
www.glmv.com
GLMV Architecture, Inc
MO State Certificate of Authority #F00364807

HOSS & BROWN ENGINEERS
15902 Midland Drive
Shawnee, Kansas 66217
913.362.9090 I mail@h-be.com

© Hoss & Brown Engineers 2019

MO Certificate of Authority: 01022

OFFICE OF ADJUTANT GENERAL
DIVISION OF FACILITIES MANAGEMENT, DESIGN AND CONSTRUCTION
DEPARTMENT OF PUBLIC SAFETY
Missouri Army National Guard

Camp Clark Training Site

18159 South K Highway
Nevada, Missouri 64772

FITNESS CENTER - STORM SHELTER

PROJECT # T1930-01
SITE # 6275
ASSET # 8136274078

REVISION:
DATE:
REVISION:
DATE:
REVISION:
DATE:
ISSUE DATE: 07/02/2020

CAD DWG FILE:

DRAWN BY: MEB
CHECKED BY: CJS
DESIGNED BY: MEB

SHEET TITLE:
ELECTRICAL SITE PLAN

SHEET NUMBER:
E-100

07/02/2020

BID DOCUMENTS

GENERAL NOTES:

A. THESE DRAWINGS ARE DIAGRAMMATIC IN NATURE AND INDICATE THE GENERAL EXTENT OF THE WORK. THE ELECTRICAL CONTRACTOR SHALL PROVIDE ALL PULL BOXES, JUNCTION BOXES AND INCIDENTAL MATERIALS AND LABOR FOR A COMPLETE AND FULLY FUNCTIONAL SYSTEM.

B. ELECTRICAL CONTRACTOR SHALL DERATE CONDUCTORS AS REQUIRED BY THE N.E.C. WHEN GROUPED IN COMMON RACEWAYS.

C. VERIFY REQUIREMENTS OF ALL MECHANICAL EQUIPMENT WITH CONTRACTOR PROVIDED SUBMITTALS. NOTIFY ENGINEER OF ANY CONFLICTS BETWEEN THE SUBMITTALS AND ELECTRICAL DRAWINGS.

D. CONTRACTOR SHALL OFFSET OUTLET BOXES ON OPPOSITE SIDES OF A COMMON WALL TO PREVENT SOUND TRANSMISSION BETWEEN ADJOINING ROOMS. BOXES SHALL BE A MINIMUM OF 12" APART, AND MUST BE INSTALLED IN SEPARATE STUD CAVITIES.

E. ALL LOW VOLTAGE WIRES NOT ROUTED IN CONDUIT SHALL BE PROVIDED AS PLENUM RATED CABLES.

F. PROVIDE JUNCTION BOXES AND 3/4" CONDUIT WITH PULL-STRINGS UP TO ACCESSIBLE LOCATION IN PLENUM AT ALL VOICE AND DATA OUTLET LOCATIONS.

G. WHERE BOXES ARE INSTALLED IN CONCRETE BLOCK WALLS, THE BOX MOUNTING HEIGHT SHALL BE AT THE BLOCK JOINT AND THE DEVICES SHALL BE PROVIDED WITH A JUMBO COVERPLATE.

H. EQUIPMENT LAYOUTS ARE FOR REFERENCE ONLY. COORDINATE THE FINAL LOCATION OF ELECTRICAL DEVICES AND OUTLETS WITH ARCHITECT, OWNER AND FINAL EQUIPMENT PLANS PRIOR TO INSTALLATION.

I. PROVIDE LOCKING CLIPS ON ALL CIRCUIT BREAKERS SERVING TELECOMMUNICATION EQUIPMENT AND FIRE ALARM CONTROL PANELS.

J. COORDINATE THE EXACT LIGHT FIXTURE LOCATIONS WITH THE ARCHITECTURAL DRAWINGS.

PLAN NOTES:

1. MOUNT EXTERIOR PHOTOCELL 'PC' AT 2'-0" BELOW TOP OF ROOF, FACING NORTHERN EXPOSURE. CONTRACTOR SHALL COORDINATE WITH OWNER TO SET APETURE OPENING. REFER TO E-401.
2. 48"x48"x3/4" FIRE TREATED PLYWOOD TELECOMMUNICATIONS BOARD FOR INSTALLATION OF TELEDATA EQUIPMENT. PROVIDE GROUNDING BUS AND CONNECT TO SYSTEM GROUND. COORDINATE EQUIPMENT TO BE MOUNTED TO TELEDATA BOARD WITH OWNER PRIOR TO BID. TELEDATA CABLING SHALL BE FIBER-OPTIC AS BASIS-OF-DESIGN. CONTRACTOR SHALL REFER TO SPECIFICATION SECTIONS 27 01 00 - GENERAL COMMUNICATIONS REQUIREMENTS, 27 20 13 - DATA/PHONE SYSTEM REQUIREMENTS, AND 27 20 15 - DATA/PHONE SYSTEM STRUCTURED CABLING FOR FURTHER INFORMATION AND WORK REQUIRED.
3. PROVIDE SCHNEIDER ELECTRIC (B.O.D.) MODEL TVS2HWA10X (B.O.D.) 100KA TVSS PROTECTION AT NEW PANELBOARD. MINIMIZE CONDUCTOR DISTANCE. ROUTE (4) #10 AND (1) #10 GROUND TO TVSS CONNECTION.
4. PROVIDE 7-DAY, 24 HOUR, ASTRONOMICAL TIMECLOCK 'TE' AND INTERFACE WITH EXTERIOR LIGHTING CONTRACTOR. REFER TO DETIAL ON SHEET E-101.
5. PROVIDE 8-POLE, EXTERIOR LIGHTING CONTRACTOR 'CE' AND INTERFACE WITH TIMECLOCK 'TE'. REFER TO DETAIL ON SHEET E-101.
6. PROVIDE 120V/20A/1PH AC MOTOR RATED TOGGLE SWITCH FOR DISCONNECTING MEANS. MAKE ALL REQUIRED ELECTRICAL CONNECTIONS TO FURNACE.
7. PROVIDE 208V/60A/1PH NON-FUSED DISCONNECT SWITCH IN A NEMA 3R ENCLOSURE AND MAKE ALL REQUIRED ELECTRICAL CONNECTIONS TO CONDENSING UNIT. HOMERUN WITH (3)#4 & #10 GROUND WIRE IN A 1" CONDUIT.
8. PROVIDE 208V/30A/1PH NON-FUSED DISCONNECT SWITCH IN A NEMA 3R ENCLOSURE AND MAKE ALL REQUIRED ELECTRICAL CONNECTIONS TO CONDENSING UNIT. HOMERUN WITH (3)#10 & #10 GROUND WIRE IN A 1/2" CONDUIT.
9. MOUNT RECEPTACLE FOR INSTANTANEOUS WATER HEATER ADJACENT TO ASSOCIATED WATER HEATER.
10. TO UTILITY TRANSFORMER. SIZE PER ELECTRICAL RISER DIAGRAM. CORDINATE WITH CIVIL DRAWINGS AND ELECTRICAL UTILITY. CONTACT RONI GIBBENS AT EVERGY. PHONE NUMBER: 816-896-8876.
11. PROVIDE 2-GANG FLOOR BOX. PROVIDE FLOOR BOX WITH (2) 20A DUPLEX RECEPTACLES. PROVIDE COVERPLATE SUITABLE FOR FLOOR FINISH AS NOTED IN ARCHITECTURAL DRAWINGS.
12. PROVIDE RECEPTACLE FOR ATMOS AIR IONIZER. INTERLOCK RECEPTACLE WITH MANUFACTURER PROVIDE AIR PRESSURE SWITCH SO THAT UNIT IS ACTIVATED WHEN AIR HANDLER TURNS ON. COORDINATE EXACT LOCATION WITH MECHANICAL CONTRACTOR PRIOR TO ROUGH-IN. COORDINATE ALL ELECTRICAL REQUIREMENTS WITH MANUFACTURER PRIOR TO INSTALLATION.
13. MOTORIZED OUTSIDE AIR DAMPER SHALL BE INTERLOCKED WITH AIR HANDLER. CIRCUIT MOTORIZED AIR DAMPER TO SAME CIRCUIT AS ASSOCIATED AIR HANDLER. DAMPER TO BE OPENED WHEN FAN IS RUNNING.
14. PROVIDE (1) 4" EMPTY CONDUIT WITH PULL STRING OUT FOR CABLE TV, TELEPHONE, AND INTERNET SERVICES. REFER TO CIVIL DRAWINGS FOR CONTINUATION. EXTEND CONDUIT TO PROPERTY LINE, COORDINATE WITH CIVIL ENGINEER FOR CONDUIT ROUTING OUTSIDE OF BUILDING. COORDINATE EXACT LOCATION AND CONNECTION REQUIREMENTS OF SERVICE PROVIDER'S UTILITY PEDESTAL WITH SERVICE PROVIDER AND OWNER.OWNER PRIOR TO BID. STUB-UP IN ROOM A MINIMUM OF 6" ABOVE FINISHED GRADE. PROVIDE 4" CONDUIT SLEEVE THROUGH FLOOR FOR TELECOM CABLING.
15. MAKE ELECTRICAL CONNECTION TO MOTORIZED WINDOW SHUTTERS. COORDINATE ALL ELECTRICAL REQUIREMENTS WITH MANUFACTURER PRIOR TO INSTALLATION. PROVIDE SINGLE CONTROL SWITCH FOR ALL WINDOW SHUTTERS AT EACH DOOR.
16. PROVIDE EXTERIOR, BUILDING MOUNTED, WEATHER PROOF COMBINATION AUDIBLE/VISUAL ALARM FOR CAMP CLARK FIRE DEPARTMENT NOTIFICATION NEAR FIRE DEPARTMENT CONNECTION. COORDINATE EXACT LOCATION WITH CAMP CLARK SECURITY PERSONNEL.
17. WINDOW SHUTTERS CONTROL SWITCH. PROVIDE ALL REQUIRED RELAYS/CONTACTOR SO THAT EITHER SWITCH AT EACH DOOR HAS THE ABILITY TO CONTROL ALL WINDOW SHUTTERS TOGETHER.
18. PROVIDE 1.5KVA INVERTER EQUAL TO MYERS #4-E-1-S-R120-BA2003/NA2001-T-2YW WITH MINIMUM 120 MINUTE RUNTIME, 240V INPUT-120/240V OUTPUT AND (4) 20A/120V OUTPUT CIRCUIT BREAKERS. (3) OF THE CIRCUIT BREAKERS SHALL BE NORMALLY ON AND (1) CIRCUIT BREAKER SHALL BE NORMALLY OFF FOR THE EMERGENCY EXHAUST FAN EF-2.
19. ROUTE CIRCUIT THROUGH EXTERIOR LIGHTING CONTACTOR. REFERENCE CONTACTOR DETAIL FOR MORE INFORMATION.
20. PROVIDE CONTINUOUS CONTACT RED MUSHROOM PUSH BUTTON LABELED "HVAC SHUTDOWN". INTERLOCK CONTROLS WITH ALL VENTILATION EQUIPMENT CONTROLS SO ALL POWER TO VENTILATION EQUIPMENT IS REMOVED WHEN BUTTON IS PUSHED. PROVIDE ALL REQUIRED RELAYS/CONTACTOR FOR SHUTDOWN OF ALL VENTILATION EQUIPMENT.
21. PROVIDE EMERGENCY LIGHTING CONTROL UNIT. MAKE ALL REQUIRED POWER AND CONTROL CONNECTIONS SO THAT EMERGENCY FIXTURES ARE CONTROLLED THE SAME AS THE NORMAL FIXTURES IN THE ROOM. MOUNT UNIT ABOVE NEAREST ACCESSIBLE CEILING. EMERGENCY LIGHT FIXTURES SHALL BE CONNECTED TO "NORMALLY ON" CIRCUIT BREAKER AT INVERTER LOCATED IN STORAGE ROOM.
22. EXHAUST FAN EF-2 TO ONLY OPERATE IN EMERGENCY CONDITIONS. FAN SHALL BE CONNECTED TO "NORMALLY OFF" CIRCUIT BREAKER AT INVERTER LOCATED IN STORAGE ROOM AND ACTIVATE IF NORMAL POWER IS LOST. MOTORIZED DAMPER SHALL BE CLOSED DURING NON-EMERGENCY OPERATION. DAMPER SHALL FAIL OPEN IN CASE NORMAL POWER IS LOST.

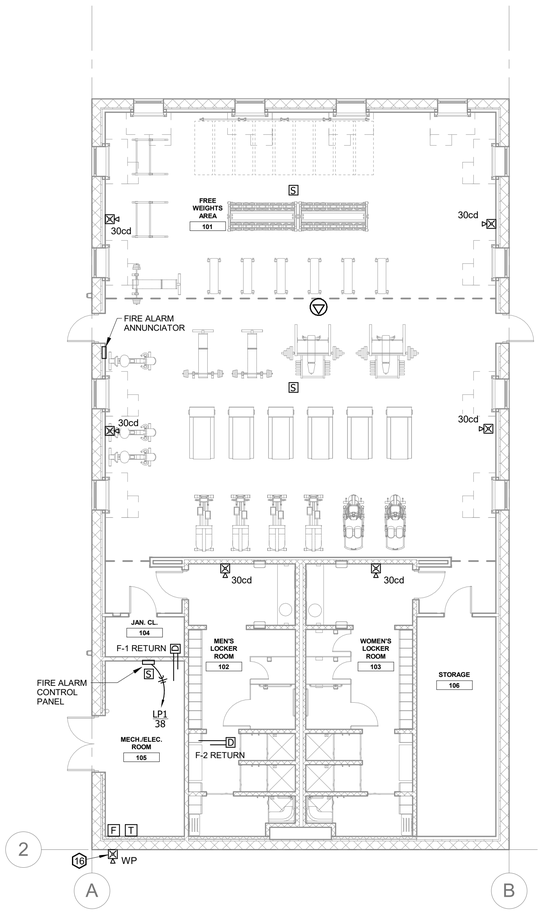

3 First Floor Special Systems Plan

Scale: 1/8" = 1'-0"

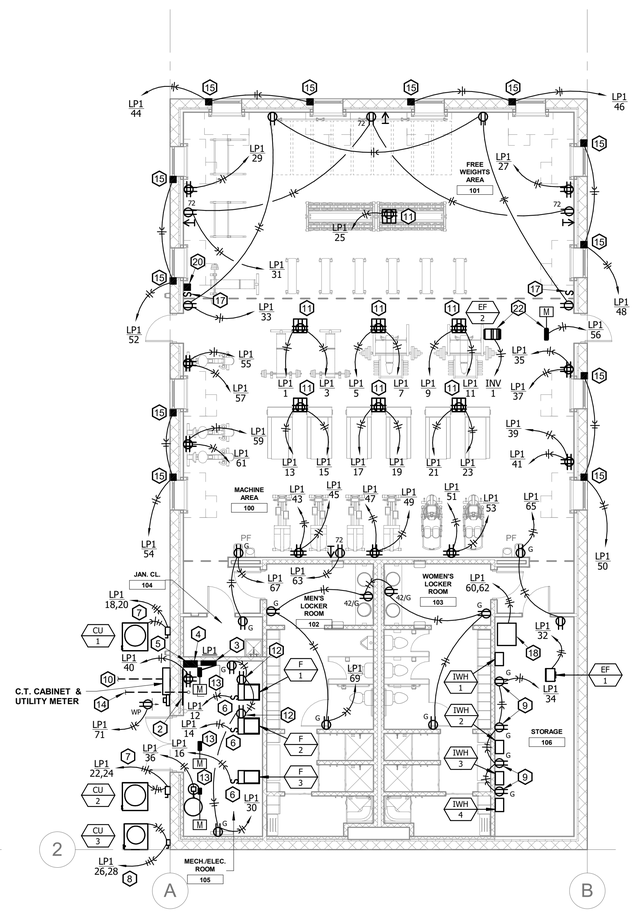

2 First Floor Power Plan

Scale: 1/8" = 1'-0"

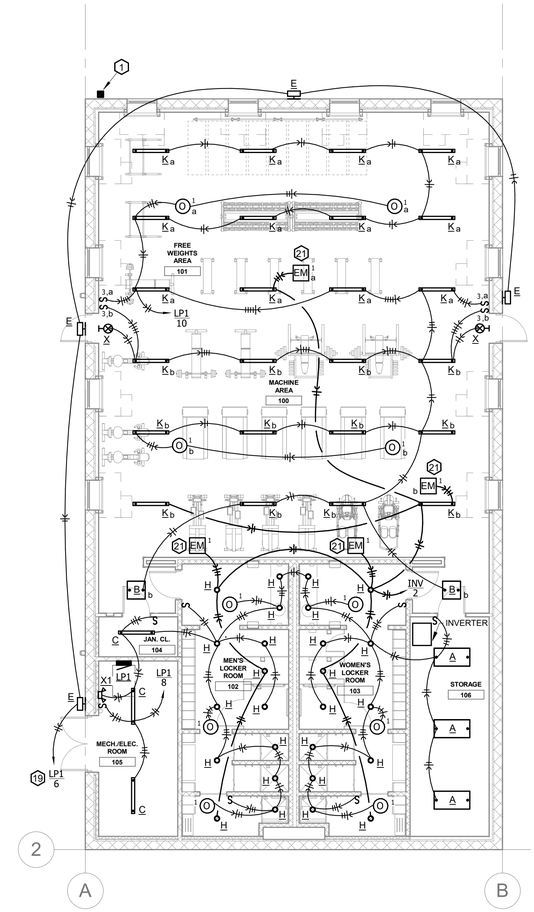

1 First Floor Lighting Plan

Scale: 1/8" = 1'-0"

STATE OF MISSOURI
MIKE PARSON,
GOVERNOR

STATE OF MISSOURI
CASEY JOHN STEINER
NUMBER
PE-2005035182
PROFESSIONAL ENGINEER

BID DOCUMENTS

GLMV Architecture
9229 Ward Parkway, Kansas City, MO 64114
Tel: (816) 444-4200
www.glmv.com
GLMV Architecture, Inc
MO State Certificate of Authority #F00364807

HOSS & BROWN ENGINEERS
15902 Midland Drive
Shawnee, Kansas 66217
913.362.9090 I mail@h-b-e.com
© Hoss & Brown Engineers 2019
MO Certificate of Authority: 01022

OFFICE OF ADJUTANT GENERAL
DIVISION OF FACILITIES MANAGEMENT, DESIGN AND CONSTRUCTION
DEPARTMENT OF PUBLIC SAFETY
Missouri Army National Guard

Camp Clark Training Site

18159 South K Highway
Nevada, Missouri 64772

FITNESS CENTER - STORM SHELTER

PROJECT # T1930-01
SITE # 6275
ASSET # 8136274078

REVISION:
DATE:
REVISION:
DATE:
REVISION:
DATE:
ISSUE DATE: 07/02/2020

CAD DWG FILE:

DRAWN BY: MEB
CHECKED BY: CJS
DESIGNED BY: MEB

SHEET TITLE:
ELECTRICAL PLANS

SHEET NUMBER:
E-101

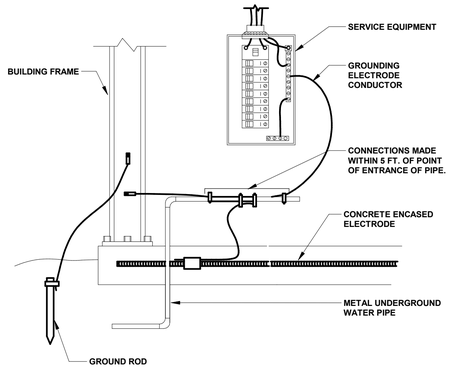

1 Grounding Electrode System

Scale: Not to Scale

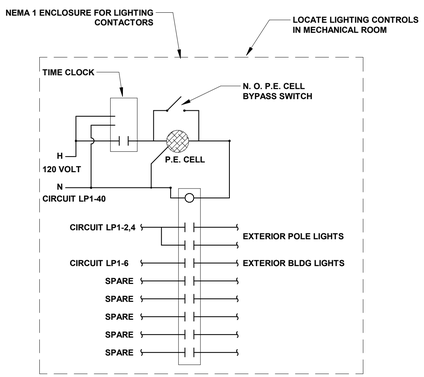

2 Exterior Lighting Control Detail

Scale: Not to Scale

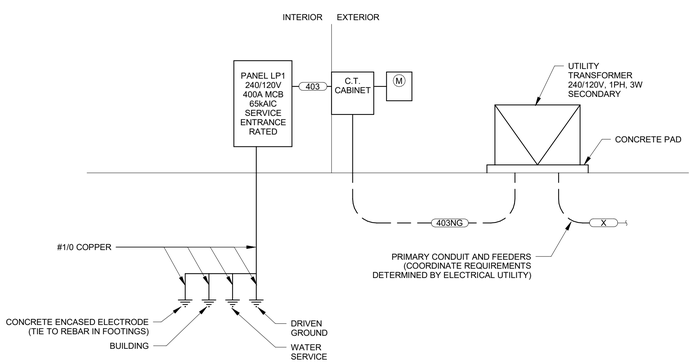

3 Electrical Riser Diagram

Scale: Not to Scale

GENERAL NOTES:

1. CONTRACTOR SHALL BE RESPONSIBLE FOR COORDINATING THE ROUTING OF ALL FEEDERS THROUGH BUILDING.
2. METERING EQUIPMENT, BUILDING DISCONNECTS AND TRANSFORMER ARE SHOWN DIAGRAMMATICALLY. REFER TO SITE AND BUILDING POWER PLANS FOR ACTUAL LOCATIONS.
3. METER SOCKETS AND ASSOCIATED METER REQUIREMENTS SHALL BE IN CONFORMANCE WITH THE NEC AND LOCAL UTILITY COMPANY GUIDELINES. ANY DEVIATIONS FROM WHAT IS SHOWN SHALL BE BROUGHT TO THE ATTENTION OF THE ENGINEER PRIOR TO ORDERING AND INSTALLATION OF EQUIPMENT.

FEEDER SCHEDULE:

ALL SIZES LISTED BELOW ARE FOR STABILOY ALUMINUM ALLOY CONDUCTORS:

X — BY OTHERS

403NG — 2 SETS (3) #250 KCMIL IN 4" PVC.

403 — 2 SETS (3) #250 KCMIL & #1 GRD. IN 2-1/2"C.

LIGHT FIXTURE SCHEDULE

NOTES:

1. PROVIDE NUMBER OF FACES AND DIRECTIONAL ARROWS TO MATCH WHAT IS SHOWN ON DRAWINGS.
2. MOUNT FIXTURE 8'-0" ABOVE FINISHED GRADE.
3. MOUNT FIXTURE 9'-0" ABOVE FINISHED FLOOR.
4. MOUNT FIXTURE 9'-6" ABOVE FINISHED FLOOR.
5. PROVIDE FIXTURE WITH BLACK FINISH.

GENERAL NOTES:

A. CONTRACTOR SHALL VERIFY CEILING TYPE PRIOR TO ORDERING ALL FIXTURES.
B. PROVIDE ALL REQUIRED ACCESSORIES FOR A COMPLETE INSTALLATION.
C. REFERENCE PLANS FOR FIXTURES REQUIRING EMERGENCY BALLASTS.

MARK	MANUFACTURER	MODEL	LAMP DATA			DIMMING	VOLTS	MOUNTING	WATTS	DESCRIPTION	NOTES
			LUMEN OUTPUT	TYPE	COLOR (K)						
A	LED2 (B.O.D.)	LED2-PANS-24-50W-40 (B.O.D.)	5928	LED	4000	-	120	RECESSED	50	2 X 4 FLAT PANEL LED	
B	LED2 (B.O.D.)	LED2-PANS-22-40W-40 (B.O.D.)	4673	LED	4000	-	120	RECESSED	40	2 X 2 FLAT PANEL LED	
C	H.E. WILLIAMS (B.O.D.)	75R-4-L65/835-DIM-UNV (B.O.D.)	6600	LED	3500	-	UNV	SURFACE	49	4 FT LED STRIP	3
E	LITHONIA (B.O.D.)	WST-LED-P2-40K-VF-120-E7WC (B.O.D.)	3000	LED	4000	-	120	WALL	25	LED WALL PACK W/EMERGENCY BATTERY	2
H	LIGHTOLIER (B.O.D.)	S7R840K10 (B.O.D.)	1000	LED	4000	-	UNV	SURFACE	15	7 IN ROUND SLIM SURFACE	
K	H.E. WILLIAMS (B.O.D.)	LLM-4-L15/840-P-SQ-ACF48-DIM-UNV (B.O.D.)	6000	LED	4000	-	UNV	SUSPENDED	45	4 FT LED LINEAR	4,5
S	H.E. WILLIAMS (B.O.D.)	VA1-L110/740-T3-F-S (B.O.D.)	11000	LED	4000	-	UNV	POLE	110	POLE MOUNTED AREA LIGHT	
X	H.E. WILLIAMS (B.O.D.)	EXIT-R-EM-WHT-D (B.O.D.)	-	LED	-	-	UNV	SEE PLANS	5	LED EXIT SIGN W/EMERGENCY BATTERY	1
X1	H.E. WILLIAMS (B.O.D.)	EMER/LED-WHT-D (B.O.D.)	-	LED	-	-	120	WALL	2	LED EMERGENCY WALL LIGHT	

LIGHTING CONTROLS SCHEDULE

CONTROL NOTES:

1. AUTO ON (OCCUPANCY MODE): LOAD TURNS ON AND OFF AUTOMATICALLY BASED ON OCCUPANCY. IF LOAD IS TURNED OFF MANUALLY, LOAD REMAINS OFF UNTIL 5 MINUTES AFTER OCCUPANT DETECTED, IT THEN REVERTS TO AUTO ON MODE.
2. MANUAL ON (VACANCY MODE): OCCUPANT MUST MANUALLY PRESS ON/OFF BUTTON TO ENERGIZE THE LOAD. LOAD REMAINS ENERGIZED UNTIL NO MOTION IS DETECTED FOR THE SELECTED TIME DELAY.
3. 30 SECOND RE-TRIGGER DELAY - IF SENSOR DETECTS MOTION DURING DELAY SENSOR SHALL RE-ENERGIZE LOAD.
4. SENSOR SHALL ENERGIZE LOAD UPON DETECTION OF MOTION. LOAD IS DE-ENERGIZED ONCE SPACE IS VACANT AND THE ADJUSTABLE TIME DELAY ELAPSES.
5. MANUAL OVERRIDE SWITCH SHALL DE-ENERGIZE LOAD DURING OCCUPANCY FOR THE DURATION OF THE SET TIME DELAY. MANUAL ON SWITCH SHALL ENERGIZE LOAD FOR THE DURATION OF OCCUPANCY.
6. FOR DUAL SWITCH SENSORS DEFAULT IN AUTO-ON TO 50% OPERATION.

GENERAL NOTES (APPLIES TO ALL ABOVE):

A. PROVIDE POWER PACKS FOR ALL LOW VOLTAGE OCCUPANCY SENSORS.
B. PROVIDE POWER PACK TYPE AND QUANTITY RECOMMENDED BY MANUFACTURER FOR DEVICES SCHEDULED.
C. PROVIDE ALL REQUIRED WIRING FOR A COMPLETE INSTALLATION. REFERENCE MANUFACTURER'S WIRING DIAGRAMS FOR ALL REQUIRED WIRING.
D. AMBIENT LIGHT LEVEL THRESHOLD SHALL BE SET WITH ALL LIGHT FIXTURES IN ROOM ENERGIZED AND NO EXTERIOR LIGHT PRESENT. ADJUSTABLE AMBIENT LIGHT SENSOR WILL KEEP LOAD DE-ENERGIZED UPON OCCUPANCY IF LIGHT LEVEL SETPOINT IS ACHIEVED. IF AMBIENT LIGHT DROPS BELOW SETPOINT DURING OCCUPANCY, SENSOR SHALL...
E. DUAL TECHNOLOGY SENSORS OCCUPANCY LOGIC SHALL BE SELECTED FOR DETECTION BY EITHER TECHNOLOGY AND SHOULD ONLY REQUIRE ONE FOR INITIAL AND MAINTAINED OCCUPANCY AND RETRIGGER WHEN OPTION IS AVAILABLE.

MARK	MANUFACTURER	MODEL	DEVICE	MOUNTING	SENSOR TYPE	TIME DELAY SETTINGS	MANUAL ON	AUTO ON	VOLTS	NOTES
EM1	WATTSTOPPER (B.O.D.)	ELCU-200 (B.O.D.)	EMERGENCY BYPASS CONTROL	PLENUM	-	-	-	-	120	-
O1	WATTSTOPPER (B.O.D.)	DT-355 (B.O.D.)	OCCUPANCY SENSOR	CEILING	DUAL-TECHNOLOGY	30 MINUTES	YES	RESTROOM/CORRIDORS	120	2,3,4,5,6
PC	WATTSTOPPER (B.O.D.)	EM-24D2 (B.O.D.)	EXTERIOR PHOTOCELL	WALL	-	-	-	YES	24VDC	-

PANEL LP1

DESCRIPTION: 400 A, 400 A MCB, 65 kAIC RATING — 100% Neutral Bus

LOCATION: MECH./ELEC. ROOM 105
SUPPLY FROM:
MOUNTING: Surface

VOLTAGE: 120/240 1 PH 3 WIRE

NOTES	NO	LOAD DESCRIPTION	AMP SIZE	P	A		B		P	AMP SIZE	LOAD DESCRIPTION	NO	NOTES
	1	Treadmill 1	20 A	1	500	110			2	20 A	LTS - Exterior Poles	2	
	3	Treadmill 2	20 A	1			500	110	--	--	--	4	
	5	Treadmill 3	20 A	1	500	202			1	20 A	LTS - Exterior Building	6	
	7	Treadmill 4	20 A	1			500	593	1	20 A	LTS - Locker Rooms/Mech	8	
	9	Treadmill 5	20 A	1	500	1031			1	20 A	LTS - Fitness Area	10	
	11	Treadmill 6	20 A	1			500	1669	1	20 A	F-1	12	
	13	Treadmill 7	20 A	1	500	1669			1	20 A	F-2	14	
	15	Treadmill 8	20 A	1			500	948	1	20 A	F-3	16	
	17	Treadmill 9	20 A	1	500	4440			2	60 A	CU-1	18	
	19	Treadmill 10	20 A	1			500	4440	--	--	--	20	
	21	Treadmill 11	20 A	1	500	4440			2	60 A	CU-2	22	
	23	Treadmill 12	20 A	1			500	4440	--	--	--	24	
	25	RCPT - Free Weights Floor Box	20 A	1	500	1680			2	25 A	CU-3	26	
	27	RCPT - Free Weights East	20 A	1			500	1680	--	--	--	28	
	29	RCPT - Free Weights West	20 A	1	500	720			1	20 A	RCPT - Mech/Air Ionizers	30	
	31	RCPT - Free Weights TV's	20 A	1			540	100	1	20 A	EF-1	32	
	33	RCPT - Free Weights General	20 A	1	720	720			1	20 A	IWH	34	
	35	RCPT - Machine Area East 1	20 A	1			500	10	1	20 A	Water Softener	36	
	37	RCPT - Machine Area East 2	20 A	1	500	100			1	20 A	MISC - FACP	38	
	39	RCPT - Machine Area East 3	20 A	1			500	180	1	20 A	RCPT - Teledata Board	40	
	41	RCPT - Machine Area East 4	20 A	1	500	100			1	20 A	MISC - Lighting Contactor	42	
	43	RCPT - Machine Area South 1	20 A	1			500	1000	1	20 A	MISC - Window Shutters North 1	44	
	45	RCPT - Machine Area South 2	20 A	1	500	1000			1	20 A	MISC - Window Shutters North 2	46	
	47	RCPT - Machine Area South 3	20 A	1			500	1000	1	20 A	MISC - Window Shutters East 1	48	
	49	RCPT - Machine Area South 4	20 A	1	500	1000			1	20 A	MISC - Window Shutters East 2	50	
	51	RCPT - Machine Area South 5	20 A	1			500	1000	1	20 A	MISC - Window Shutters West 1	52	
	53	RCPT - Machine Area South 6	20 A	1	500	1000			1	20 A	MISC - Window Shutters West 2	54	
	55	RCPT - Machine Area West 1	20 A	1			500	50	1	20 A	EF-2 Motorized Damper	56	
	57	RCPT - Machine Area West 2	20 A	1	500	0			1	20 A	Spare	58	
	59	RCPT - Machine Area West 3	20 A	1			500	825	2	20 A	INVERTER	60	
	61	RCPT - Machine Area West 4	20 A	1	500	0			--	--	--	62	
	63	RCPT - Machine Area TV's	20 A	1			180	0	1	20 A	Spare	64	
	65	RCPT - Machine Area General East	20 A	1	360	0			1	20 A	Spare	66	
	67	RCPT - Machine Area General West	20 A	1			360	0	1	20 A	Spare	68	
	69	RCPT - Locker Rooms	20 A	1	1080	0			1	20 A	Spare	70	
	71	RCPT - Exterior Maintenance	20 A	1			180	0	1	20 A	Spare	72	
				Total Load:	27557 VA		25829 VA						
				Total Amps:	230 A		215 A						

Load Classification	Connected Load	Demand Factor	Estimated Demand	Panel Totals	
Cooling	21120 VA	100.00%	21120 VA		
Lighting	2261 VA	125.00%	2826 VA	Total Conn. Load:	53382 VA
Motor	4864 VA	111.08%	5403 VA	Total Est. Demand:	50016 VA
Other	0 VA	0.00%	0 VA	Total Conn.:	222 A
Receptacle	18820 VA	76.57%	14410 VA	Total Est. Demand:	208 A
Miscellaneous	6988 VA	100.00%	6988 VA		

Notes:

STATE OF MISSOURI
MIKE PARSON, GOVERNOR

STATE OF MISSOURI — CASEY JOHN STEINER — NUMBER PE-2009035182 — PROFESSIONAL ENGINEER

BID DOCUMENTS

GLMV Architecture
9229 Ward Parkway, Kansas City, MO 64114
Tel: (816) 444-4200
www.glmv.com
GLMV Architecture, Inc
MO State Certificate of Authority #F00364807

H&B HOSS & BROWN ENGINEERS
15902 Midland Drive
Shawnee, Kansas 66217
913.362.9090 I mail@h-be.com
© Hoss & Brown Engineers 2019
MO Certificate of Authority: 01022

OFFICE OF ADJUTANT GENERAL
DIVISION OF FACILITIES MANAGEMENT, DESIGN AND CONSTRUCTION
DEPARTMENT OF PUBLIC SAFETY
Missouri Army National Guard

Camp Clark Training Site

18159 South K Highway
Nevada, Missouri 64772

FITNESS CENTER - STORM SHELTER

PROJECT # T1930-01
SITE # 6275
ASSET # 8136274078

REVISION:
DATE:
REVISION:
DATE:
REVISION:
DATE:
ISSUE DATE: 07/02/2020

CAD DWG FILE:

DRAWN BY: MEB
CHECKED BY: CJS
DESIGNED BY: MEB

SHEET TITLE:
ELECTRICAL DETAILS AND SCHEDULES

SHEET NUMBER:
E-401

33 OF 33 SHEETS
07/02/2020