Construct New
44 Soldier Barracks - Building 757
Camp Crowder Training Site
Neosho, Missouri

ARCHITECT

GHN
GASKIN HILL NORCROSS OF MISSOURI, INC.
300 South Jefferson Avenue, Suite 301, Springfield, MO 65806
417.869.0719 www.ghnae.com

CIVIL ENGINEER

OWN
Engineering beyond.™

OWN
Missouri State Certificate of Authority #000062
3213 S. West Bypass * Springfield, MO 65807
P: 417.866.2741

STRUCTURAL ENGINEER

rtm engineering consultants

rtm engineering consultants
Missouri State Certificate of Authorization No. E-2011011004
Charles M. Taylor, P.E. E-20174014241
3045 S Kansas Expressway * Springfield, MO 65807
P: 417.708.9315

MECHANICAL / ELECTRICAL ENGINEER

CJD
Engineering | Energy | Innovation

2101 West Chesterfield Boulevard, Suite B-105A, Springfield, MO 65807
P: 417.877.1700 F: 417.324.7735 www.cjd-eng.com

OWNER: DEPARTMENT OF THE MISSOURI NATIONAL GUARD
OFFICE OF THE ADJUTANT GENERAL
FACILITIES MANAGEMENT OFFICE

PROJECT MANAGEMENT: DEPARTMENT OF THE MISSOURI NATIONAL GUARD
OFFICE OF THE ADJUTANT GENERAL
FACILITIES MANAGEMENT OFFICE

CAMP CROWDER TRAINING SITE

1 G-001 **SITE LOCATION**
N.T.S.

NORTH

DESIGNER: Gaskin Hill Norcross of Missouri, Inc.

PROJECT NUMBER: T2234-01

SITE NUMBER: 6260
ASSET NUMBER: 8136260012
BUILDING NUMBER: 757

SHEET NUMBER:
G-001
1 OF 32 SHEETS
JUNE 11, 2022

SCOPE OF WORK

PROJECT MANUAL (CSI) SECTION REF. NUMBER	SECTION NAME REFERENCE (SECTIONS OWNER FURNISHED AND INSTALLED NOT INCLUDED IN PROJECT MANUAL - FOR REFERENCE ONLY)	FURNISHED BY CONTRACTOR	INSTALLED BY CONTRACTOR	FURNISHED BY OWNER	INSTALLED BY OWNER	CONTACT INFORMATION: COMPANY & ADDRESS	CONTACT INFORMATION: POINT OF CONTACT, PHONE (P), CELL (C), OR EMAIL (E)
01 11 00	SUMMARY OF WORK GENERAL BUILDING PERMIT (NOT REQUIRED) STATE DEPARTMENT OF NATURAL RESOURCES PERMIT (NOT REQUIRED)			X		STATE OF MISSOURI OFFICE OF ADMINISTRATION DIVISION OF FACILITIES MANAGEMENT DESIGN & CONSTRUCTION HARRY S TRUMAN STATE OFFICE BUILDING RM. 730 JEFFERSON CITY, MO 65102	JEREMY NEWTON, PROJECT MANAGER (C): (573) 308-6894 (E): jeremy.l.newton.nfg@army.mil
01 11 00	SUMMARY OF WORK (ALL TRADE PERMITS, UTILITY IMPACT AND CONNECTION FEES, OR PERMITS AND FEES REQUIRED FOR PROJECT COMPLETION)	X				(TO BE DETERMINED)	(TO BE DETERMINED)
01 45 33	SPECIAL INSPECTIONS AND PROCEDURES (REFER TO SECTION FOR ADDITIONAL REQUIREMENTS)		X	X		ANDERSON ENGINEERING, INC. 811 E 3rd St. JOPLIN, MISSOURI 64801	AARON HARGRAVE (E): AHARGRAVE@AE-INC.COM PHONE: (417) 782-7399
08 71 00	DOOR HARDWARE (LOCK CORES AND KEYS - CONTRACTOR TO SUBMIT LIST OF MATERIALS REQUIRED FOR OWNER TO SUBMIT ORDER TO HARDWARE MANUFACTURER, COST OF MATERIALS AND DELIVERY BY CONTRACTOR)	X			X	STATE OF MISSOURI DEPARTMENT OF PUBLIC SAFETY MISSOURI ARMY NATIONAL GUARD CONSTRUCTION AND FACILITIES MANAGEMENT OFFICE 6819 NORTH BOUNDARY ROAD JEFFERSON CITY, MISSOURI 65101	JEREMY NEWTON, PROJECT MANAGER (C): (573) 308-6894 (E): jeremy.l.newton.nfg@army.mil
11 20 00	COMMERCIAL EQUIPMENT (VENDING EQUIPMENT & ICE MACHINE)			X	X	(TO BE DETERMINED)	OWNER'S DESIGNATED PROJECT MANAGER
12 44 16	SHOWER CURTAINS (SHOWER CURTAINS AND HOOKS)			X	X	STATE OF MISSOURI DEPARTMENT OF PUBLIC SAFETY MISSOURI ARMY NATIONAL GUARD CONSTRUCTION AND FACILITIES MANAGEMENT OFFICE 6819 NORTH BOUNDARY ROAD JEFFERSON CITY, MISSOURI 65101	JEREMY NEWTON, PROJECT MANAGER (C): (573) 308-6894 (E): jeremy.l.newton.nfg@army.mil
12 56 43	DORMITORY FURNITURE (BEDS, NIGHT STANDS, LOCKERS, SEATING, TABLES, RECYCLING CONTAINERS, FREE STANDING WASTE CONTAINERS)			X	X	(TO BE DETERMINED)	OWNER'S DESIGNATED PROJECT MANAGER
25 00 00	INTEGRATED AUTOMATION (ENERGY MANAGEMENT SYSTEM - COORDINATION TO EXISTING SITE SYSTEM)			X	X	STATE OF MISSOURI DEPARTMENT OF PUBLIC SAFETY MISSOURI ARMY NATIONAL GUARD CONSTRUCTION AND FACILITIES MANAGEMENT OFFICE 6819 NORTH BOUNDARY ROAD JEFFERSON CITY, MISSOURI 65101	JEREMY NEWTON, PROJECT MANAGER (C): (573) 308-6894 (E): jeremy.l.newton.nfg@army.mil
27 10 00	COMMUNICATIONS SYSTEMS STRUCTURED CABLING (CONDUIT, HARDWARE, WIRING, EQUIPMENT)	X	X			(TO BE DETERMINED)	OWNER'S DESIGNATED PROJECT MANAGER
27 10 00	COMMUNICATIONS SYSTEMS STRUCTURED CABLING (FIBER CABLING)			X	X	STATE OF MISSOURI DEPARTMENT OF PUBLIC SAFETY MISSOURI ARMY NATIONAL GUARD CONSTRUCTION AND FACILITIES MANAGEMENT OFFICE 6819 NORTH BOUNDARY ROAD JEFFERSON CITY, MISSOURI 65101	JEREMY NEWTON, PROJECT MANAGER (C): (573) 308-6894 (E): jeremy.l.newton.nfg@army.mil
28 46 00	FIRE DETECTION AND ALARM (ENTIRE SYSTEM INCLUDING HARDWARE, CONDUIT, WIRING, EQUIPMENT)	X	X			(TO BE DETERMINED)	(TO BE DETERMINED)
28 46 00	FIRE DETECTION AND ALARM (REMOTE MONITORING SERVICE)			X	X	STATE OF MISSOURI DEPARTMENT OF PUBLIC SAFETY MISSOURI ARMY NATIONAL GUARD CONSTRUCTION AND FACILITIES MANAGEMENT OFFICE 6819 NORTH BOUNDARY ROAD JEFFERSON CITY, MISSOURI 65101	JEREMY NEWTON, PROJECT MANAGER (C): (573) 308-6894 (E): jeremy.l.newton.nfg@army.mil

SCOPE OF WORK SCHEDULE NOTES:
1. CONTRACTOR TO COORDINATE WORK SCHEDULE WITH OWNER FURNISHED MATERIALS.

SHEET INDEX

SHEET NO.	SHEET NAME
G-001	COVER SHEET
G-002	SHEET INDEX / SCOPE OF WORK SCHEDULE
G-101	CODE ANALYSIS PLAN
C-101	SITE DEVELOPMENT PLAN
C-102	SITE DEVELOPMENT DETAILS
C-103	SITE GRADING / EROSION CONTROL PLAN
C-104	SITE UTILITY PLAN
C-501	MISCELLANEOUS SITE DETAILS
A-101	FLOOR PLAN
A-102	ROOF PLAN
A-201	EXTERIOR ELEVATIONS
A-301	BUILDING SECTIONS
A-401	WALL SECTIONS
A-402	WALL SECTIONS
A-403	WALL SECTIONS
A-404	ENLARGED PLAN, INTERIOR ELEVATIONS
A-501	MISCELLANEOUS DETAILS
A-601	DOOR AND WINDOW SCHEDULES
A-701	REFLECTED CEILING PLAN
I-101	INTERIOR FINISH PLAN
S-000	GENERAL NOTES
S-001	GENERAL NOTES & DETAILS - LGMF
S-002	SPECIAL INSPECTIONS
S-101	FOUNDATION PLAN
S-201	FOUNDATION DETAILS
SE-101	SITE LIGHTING PLAN
P-101	PLUMBING PLANS
P-401	ENLARGED PLUMBING PLAN & SCHEDULES
M-101	HVAC PLAN, SCHEDULES & DETAILS
E-101	LIGHTING PLAN
E-102	POWER PLAN
E-103	FIRE ALARM SYSTEM PLAN

GENERAL NOTES

A. REFER TO PROJECT MANUAL FOR ADDITIONAL REQUIREMENTS.

B. THE ARCHITECT AND ENGINEER'S RESPONSIBILITY IS ONLY FOR THE INFORMATION INCLUDED WITHIN THE CONSTRUCTION DOCUMENTS. ALL OTHER DOCUMENTS AND INSTRUMENTS REQUIRED FOR COMPLETION OF THE PROJECT SHALL BE THE RESPONSIBILITY OF OTHERS AND ARE HEREBY DISCLAIMED.

C. QUALITY STANDARD AND BUILDING CODE - ALL CONTRACTORS SHALL BE RESPONSIBLE FOR KNOWING THE QUALITY AND PUBLIC SAFETY REGULATIONS SET FORTH IN THE GOVERNING CODES AND OTHER APPLICABLE REGULATIONS OF LOCAL AND STATE AGENCIES HAVING JURISDICTION WHICH GOVERN EACH CONTRACTOR'S WORK.

D. THE ARCHITECT AND ENGINEER IS NOT RESPONSIBLE FOR FIELD ACTIVITIES ON THIS PROJECT WITHOUT DIRECT INSPECTION OF THE WORK IN PROGRESS. IF FIELD CONDITIONS ARE UNCOVERED THAT REQUIRE A CHANGE OR ADDITIONAL INFORMATION, THE ARCHITECT AND ENGINEER DOES NOT DELEGATE THEIR AUTHORITY TO ANYONE ELSE FOR DETERMINING THE MEANING OF THEIR PLANS OR SPECIFICATIONS.

E. FIELD VERIFY EXISTING CONDITIONS BY DETAILED INSPECTION PRIOR TO SUBMITTING BID AND BEGINNING WORK. NOTIFY ARCHITECT AND ENGINEER IF EXISTING CONDITIONS DEVIATE SUBSTANTIALLY FROM THOSE INDICATED HEREIN.

ABBREVIATIONS LEGEND

AFF	ABOVE FINISHED FLOOR	INSUL	INSULATE
AC	ACOUSTICAL	INT	INTERIOR
A/C	AIR CONDITIONING	JST	JOIST
ALT	ALTERNATE	JT	JOINT
AL	ALUMINUM	JNT	JOINT
ALUM	ALUMINUM	KIT	KITCHEN
AB	ANCHOR BOLT	LH	LEFT HAND
ARCH	ARCHITECT (URAL)	LF	LINEAL FOOT
BSMT	BASEMENT	LTL	LENGTH
BRG	BEARING	L	LINTEL
BM	BENCH MARK	LL	LIVE LOAD
BEL	BELOW	MACH	MACHINE
BLK	BLOCK	MH	MANHOLE
BLKG	BLOCKING	MFR	MANUFACTURER
BD	BOARD	MAS	MASONRY
BW	BOTH WAYS	MO	MASONRY OPENING
BOT	BOTTOM	MAX	MAXIMUM
BF	BOTTOM OF FOOTING	MECH	MECHANIC(AL)
BOF	BOTTOM OF FOOTING	MED	MEDIUM
BRK	BRICK	MBR	MODIFIED BITUMEN ROOFING
BLDG	BUILDING	MET	METAL
BUR	BUILT-UP ROOFING	MTL	METAL
CAB	CABINET	M	METER(S)
CLG	CEILING	MWK	MILLWORK
CL	CENTER LINE	MIN	MINIMUM
C/O	CENTER OF	MISC	MISCELLANEOUS
CC	CENTER TO CENTER	MT	MOUNT(ED), (ING)
CLR	CLEAR	NOM	NOMINAL
COL	COLUMN	N	NORTH
CONC	CONCRETE	NIC	NOT IN CONTRACT
CMU	CONCRETE MASONRY UNIT	NTS	NOT TO SCALE
CONST	CONSTRUCTION	OC	ON CENTER(S)
CONTR	CONTRACTOR	OPG	OPENING
CONT	CONTINUOUS	OPH	OPPOSITE HAND
CNTR	COUNTER	OD	OUTSIDE DIAMETER
CFL	COUNTER FLASHING	OO	OUT TO OUT
CSK	COUNTERSUNK	OA	OVERALL
CRS	COURSE(S)	OH	OVERHEAD
CF	CUBIC FOOT	PC	PIECE
CY	CUBIC YARD	PNT	PAINT(ED)
DL	DEAD LOAD	PTD	PAINT(ED)
DEM	DEMOLISH, DEMOLITION	PKG	PARKING
DTL	DETAIL	PLAM	PLASTIC LAMINATE
DIAG	DIAGONAL	PL	PLATE
DIAM	DIAMETER	PWD	PLYWOOD
DIM	DIMENSION	PVC	POLYVINYL CHLORIDE
DR	DOOR	PSF	POUNDS PER SQUARE FT.
DS	DOWN SPOUT	PSI	POUNDS PER SQUARE IN.
D	DRAIN	PT	PRESSURE TREATED
DWG	DRAWING	PL	PROPERTY LINE
DF	DRINKING FOUNTAIN	REM	REMOVE
E	EAST	RET	RETURN
EIFS	EXTERIOR INSULATION AND FINISH SYSTEM	RH	RIGHT HAND
ELEC	ELECTRIC(AL)	RD	ROOF DRAIN
EWC	ELECTRIC WATER COOLER	RFG	ROOFING
EL	ELEVATION	RM	ROOM
ELEV	ELEVATION	RO	ROUGH OPENING
ELEV	ELEVATOR	SNT	SEALANT
EMER	EMERGENCY	SLNT	SEALANT
EQ	EQUAL	SEC	SECTION
EXG	EXISTING	SECT	SECTION
EXIST	EXISTING	SHTHG	SHEATHING
EXP	EXPOSED	SHT	SHEET
EXT	EXTERIOR	SIM	SIMILAR
FOF	FACE OF FINISH	SC	SOLID CORE
FO	FACE OF	S	SOUTH
FOM	FACE OF MASONRY	SF	SQUARE FOOT
FOS	FACE OF STUDS	SI	SQUARE INCH
FIN	FINISH(ED)	SY	SQUARE YARD
FFE	FINISHED FLOOR ELEV.	STD	STANDARD
FFL	FINISHED FLOOR LINE	STO	STORAGE
FE	FIRE EXTINGUISHER	SUS	SUSPENDED
FEC	FIRE EXTINGUISHER CABINET	SYM	SYMMETRY, (ICAL)
FT	FIRE TREATED	TEL	TELEPHONE
FLG	FLASHING	TV	TELEVISION
FLR	FLOOR	THK	THICK(NESS)
FD	FLOOR DRAIN	T&G	TONGUE & GROOVE
FTG	FOOTING	TM	TOP OF MASONRY
FDN	FOUNDATION	TOM	TOP OF MASONRY
FNDN	FOUNDATION	TS	TOP OF STEEL
FUR	FURRED(ING)	TOS	TOP OF STEEL
GA	GAGE, GAUGE	TW	TOP OF WALL
GV	GALVANIZED	TOW	TOP OF WALL
GALV	GALVANIZED	TYP	TYPICAL
GC	GENERAL CONTRACT(OR)	UON	UNLESS OTHERWISE NOTED
GL	GLASS, GLAZING	UNO	UNLESS NOTED OTHERWISE
GP	GYPSUM	VERT	VERTICAL
GYP	GYPSUM	VT	VINYL TILE
GWB	GYPSUM WALL BOARD	WSCT	WAINSCOT
HTG	HEATING	WC	WATER CLOSET
HVAC	HEATING/VENTILATING/AIR COND.	WWF	WELDED WIRE FABRIC
HT	HEIGHT	W	WEST
HC	HOLLOW CORE	W	WIDTH, WIDE
HM	HOLLOW METAL	WIN	WINDOW
HK	HOOK(S)	WO	WITHOUT
HOR	HORIZONTAL	W/O	WITHOUT
HB	HOSE BIBB	WD	WOOD
INS	INSULATE(D), (ION)		

STATE OF MISSOURI
MICHAEL L. KEHOE,
GOVERNOR

DAVID MICHAEL FROHLING
NUMBER A-2010011354
ARCHITECT
2025 06 11
David Michael Frohling
A-2010011354

GASKIN HILL NORCROSS OF MISSOURI, INC.
300 South Jefferson Avenue, Suite 301, Springfield, MO 65806
417.869.0719
www.ghnae.com

OFFICE OF
ADMINISTRATION
DIVISION OF FACILITIES
MANAGEMENT, DESIGN
AND CONSTRUCTION

DEPT. OF PUBLIC SAFETY
MISSOURI NATIONAL GUARD
DEPT. OF ADJUTANT GENERAL

CONSTRUCT NEW
44 SOLDIER BARRACKS
BUILDING 757

CAMP CROWDER
TRAINING SITE
890 RAY A CARVER DRIVE
NEOSHO, MISSOURI

PROJECT # T2234-01
SITE # 6260
ASSET # 8136260012

REVISION:
DATE:
REVISION:
DATE:
REVISION:
DATE:
ISSUE DATE: 06/11/2025

CAD DWG FILE: T2234-01-6260-8136260012-G-002
DRAWN BY: DMF
CHECKED BY: XXX
DESIGNED BY: DMF

SHEET TITLE:
SHEET INDEX / SCOPE OF WORK SCHEDULE

SHEET NUMBER:
G-002

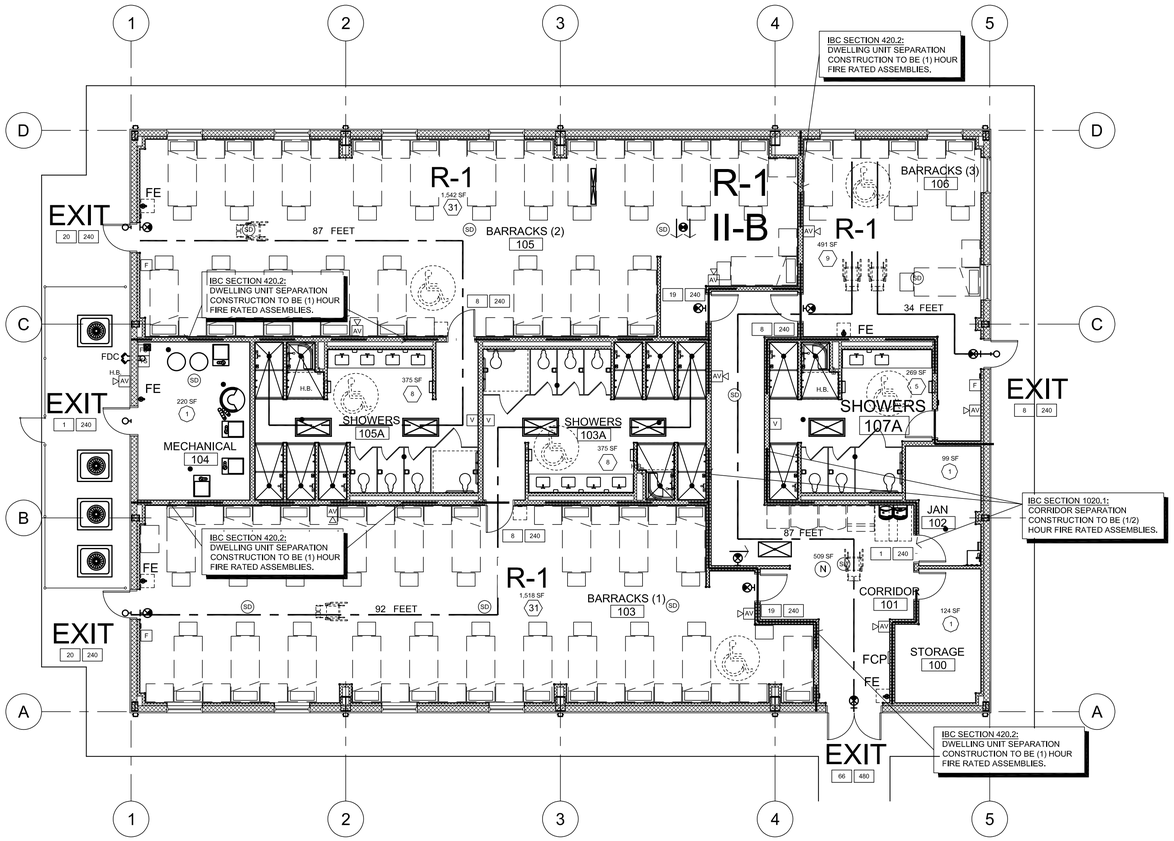

1 G-101 CODE ANALYSIS PLAN
1/8" = 1'-0"

PLAN NORTH

BUILDING CODE

JURISDICTION:	MISSOURI OFFICE OF ADMINISTRATION - FACILITIES MANAGEMENT, DESIGN & CONSTRUCTION
CITY:	NEOSHO, MISSOURI
COUNTY:	NEWTON
ZIP CODE:	64850

GOVERNING CODES AND STANDARDS

BUILDING CODE:	2018 IBC & Appendix C, F, G, I & J
PLUMBING CODE:	2018 IPC
MECHANICAL CODE:	2018 IMC
ELECTRICAL CODE:	2017 NEC
FIRE CODE:	2018 IFC
FUEL / GAS CODE:	2018 IFGC
ENERGY CODE:	2018 IECC (less Chapter 13)
ACCESSIBLE CODE:	2009 ICC A117.1
ACCESSIBILITY CODE:	2010 ADA

USE GROUP & CONSTRUCTION TYPE

PRIMARY USE GROUP:	R-1 (RESIDENTIAL)
MIXED USE AND OCCUPANCY:	SEPARATED
CONSTRUCTION TYPE:	II-B (NON-COMBUSTIBLE / UNPROTECTED)

AREA MODIFICATIONS

FRONTAGE INCREASE:	NOT APPLIED
AUTOMATIC SPRINKLER INCREASE:	PROVIDED

ALLOWABLE BUILDING HEIGHT & AREA

HEIGHT (S):	75'-0"
NUMBER OF STORIES (S):	5 STORIES
AREA (S1):	64,000 SQ. FT.

ACTUAL BUILDING HEIGHT & AREA

HEIGHT:	16'-8"
NO. OF STORIES:	1 STORY
AREA:	6,240 SQ. FT.

FIRE PROTECTION SYSTEMS

AUTOMATIC SPRINKLER SYSTEM:	REQUIRED (IBC 903.2.8)
PORTABLE FIRE EXTINGUISHERS:	PROVIDED (IBC 906.1)
MANUAL FIRE ALARM:	REQUIRED (IBC 907.2.8.1)
AUTOMATIC SMOKE DETECTION:	REQUIRED (IBC 907.2.8.2)

STRUCTURAL DESIGN
(REFER TO STRUCTURAL DRAWINGS)

1. ROOF LIVE LOAD		20.0 PSF
2. ROOF DEAD/COLLATERAL LOADS		
A. DEAD LOAD (DOES NOT INCLUDE PRECAST)		7.0 PSF
B. SPRINKLER SYSTEM		
UNIFORM BRANCH PIPE LOAD:		1.0 PSF
LINEAL LOOP / TEE MAIN PIPE LOAD:		25.0 PLF
3. SNOW LOADS	Ce = 1.0	Ct = 1.0
GROUND LOAD (Pg):		15 PSF
MINIMUM ROOF SNOW LOAD (Pf):		16 PSF
IMPORTANCE FACTOR (Is):		1.0
4 WIND LOADS		GCpI = ±0.18
BASIC WIND SPEED:		V_{ult} = 108 MPH
EXPOSURE:		C
GCpI:		±0.18
Kzt:		1.0
Kd:		0.85
5. SEISMIC		
Ss:		0.137
S1:		0.084
Sds:		0.146
Sd1:		0.134
IMPORTANCE FACTOR (Ie):		1.0
SITE CLASS:		D
DESIGN CATEGORY:		C

COMMERCIAL ENERGY EFFICIENCY CODE
COMPLIANCE WITH BUILDING ENERGY EFFICIENCY REQUIREMENTS BASED UPON APPLICABLE ENERGY CODE (PERFORMANCE METHOD).
REFER TO PROJECT MANUAL

OCCUPANCY LOAD SUMMARY

ROOM OR AREA (REFER TO FLOOR PLAN)	AREA PER OCCUPANT(S.F.)	OCCUPANTS (QTY.)
100 - STORAGE	300	1
101 - CORRIDOR	0	0
102 - JANITOR	300	1
103 - BARRACKS (1)	50	31
103.1 - SHOWERS	50	8
104 - MECHANICAL	300	1
105 - BARRACKS (2)	50	31
105.1 - SHOWERS	50	8
106 - BARRACKS (3)	50	9
106.1 - SHOWERS	50	5
TOTAL OCCUPANCY		95

PLUMBING FIXTURE SUMMARY

GENERAL

IPC TABLE 403.1	
PRIMARY OCCUPANCY:	R-1 (RESIDENTIAL)
TOTAL OCCUPANCY:	95

MINIMUM PLUMBING FACILITIES REQUIRED BY OCCUPANCY PER SEX CALCULATED BY RATIO BASED UPON ACTUAL USE (IPC 403.1):

FEMALE:	14 / 95 = 0.15
MALE:	81 / 95 = 0.85

PLUMBING FIXTURES

WATER CLOSETS (URINALS):	1 PER 100
REQUIRED FOR FEMALE:	14 / 10 = 1.4
PROVIDED FOR FEMALE:	3
REQUIRED FOR MALE:	81 / 10 = 8.1
PROVIDED FOR MALE:	8
LAVATORIES:	1 PER 100
REQUIRED FOR FEMALE:	14 / 10 = 1.4
PROVIDED FOR FEMALE:	2
REQUIRED FOR MALE:	81 / 10 = 8.1
PROVIDED FOR MALE:	8
SHOWERS:	
REQUIRED FOR FEMALE:	14 / 8 = 1.75
PROVIDED FOR FEMALE:	3
REQUIRED FOR MALE:	81 / 8 = 10.1
PROVIDED FOR MALE:	10
DRINKING FOUNTAINS:	1 PER 100
REQUIRED:	95 / 100 = 0.95
PROVIDED:	2
SERVICE SINK REQUIRED:	1
SERVICE SINK PROVIDED:	1

GENERAL NOTES

(A) REFER TO PROJECT MANUAL FOR ADDITIONAL REQUIREMENTS.

(B) REFER TO PLANS, SECTIONS, AND DETAILS FOR CONSTRUCTION OF FIRE RATED ASSEMBLIES. WHERE UNDERWRITERS LABORATORY (UL) TEST NUMBERS ARE REFERENCED, CONTRACTOR SHALL PROVIDE CONSTRUCTION MATERIALS, MEANS AND METHODS TO COMPLY WITH TESTED ASSEMBLY.

(C) REFER TO FIRE ALARM, MECHANICAL, AND ELECTRICAL DRAWINGS FOR ADDITIONAL REQUIREMENTS.

(D) OWNER FURNISHED AND INSTALLED FURNISHINGS AND FIXTURES SHOWN FOR REFERENCE ONLY.

(E) CONTRACTOR TO PROVIDE PORTABLE FIRE EXTINGUISHERS DURING CONSTRUCTION AS REQUIRED TO PROTECT THE WORK AREA AND EACH STORAGE UNIT AND JOB TRAILER PER THE FIRE CODE.

(F) CONTRACTOR TO SUBMIT FIRE SPRINKLER SYSTEM ENGINEERING SUBMITTALS FOR REVIEW AND APPROVAL.

(G) SURFACE MOUNTED PORTABLE FIRE EXTINGUISHERS SHALL BE UL LISTED ABC TYPE, WITH 10 LBS. CAPACITY.

(H) EXIT DISCHARGE DOORS, PROVIDE TACTILE EXIT SIGNS STATING "EXIT" WITH BRAILLE LETTERING. SIGN AND MOUNTING TO COMPLY WITH ANSI A117.1. REFER TO FLOOR PLAN FOR LOCATIONS.

SPECIAL INSPECTIONS

NOTES:
1. REFER TO PROJECT MANUAL - SECTION 01 4533 SPECIAL INSPECTIONS AND PROCEDURES FOR REQUIREMENTS.

2. THE OWNER SHALL PROVIDE THE SERVICES OF AN INDEPENDENT TESTING LABORATORY TO PERFORM TESTING AND SPECIAL INSPECTIONS UNLESS OTHERWISE INDICATED.

SYMBOLS LEGEND

R-1	PRIMARY USE GROUP: (RESIDENTAIL)
II-B	CONSTRUCTION TYPE: (NON-COMBUSTIBLE/UNPROTECTED)
325 SF	ROOM SQUARE FOOTAGE:
38 240	DESIGN OCCUPANT LOAD SERVED BY EXIT: MAXIMUM ALLOWABLE CAPACITY: (EXAMPLE: 36"/0.15 = 240)
N	OCCUPANT LOAD SERVED BY EXIT BUT NOT COUNTED IN TOTAL OCCUPANT LOAD:
	(1/2) HOUR FIRE RATED ASSEMBLY EXTENDS UP TO DECK, FIRE SEAL COMPLETELY:
	(1) HOUR FIRE RATED ASSEMBLY EXTENDS UP TO DECK, FIRE SEAL COMPLETELY:
XX	ROOM OCCUPANT LOAD AT 15 SQ. FT. NET PER PERSON:
XX	ROOM OCCUPANT LOAD AT 20 SQ. FT. NET PER PERSON:
XX	ROOM OCCUPANT LOAD AT 50 SQ. FT. GROSS PER PERSON:
XX	ROOM OCCUPANT LOAD AT 300 SQ. FT GROSS PER PERSON:
FDC	FIRE DEPARTMENT CONNECTION
FCP	FIRE ALARM CONTROL PANEL
F	FIRE ALARM PULL STATION
V	FIRE VISUAL ALARM
AV	FIRE ALARM AUDIO / VISUAL DEVICE
SD	SMOKE DETECTOR
	EMERGENCY EXIT LIGHTING
	EMERGENCY LIGHTING
FE	FIRE EXTINGUISHER (SURFACE MOUNTED WITH BRACKET)
	EXIT ACCESS TRAVEL DISTANCE (LENGTH IN FEET)
	ACCESSIBLE CLEAR FLOOR AREA

STATE OF MISSOURI
MICHAEL L. KEHOE,
GOVERNOR

DAVID MICHAEL FROHLING
NUMBER A-2010011354
ARCHITECT
2025 06 11
David Michael Frohling
A-2010011354

GASKIN HILL NORCROSS OF MISSOURI, INC.
300 South Jefferson Avenue, Suite 301, Springfield, MO 65806
417.869.0719
www.ghnae.com

OFFICE OF ADMINISTRATION
DIVISION OF FACILITIES MANAGEMENT, DESIGN AND CONSTRUCTION

DEPT. OF PUBLIC SAFETY
MISSOURI NATIONAL GUARD
DEPT. OF ADJUTANT GENERAL

CONSTRUCT NEW
44 SOLDIER BARRACKS
BUILDING 757

CAMP CROWDER
TRAINING SITE
890 RAY A CARVER DRIVE
NEOSHO, MISSOURI

PROJECT # T2234-01
SITE # 6260
ASSET # 8136260012

REVISION:
DATE:
REVISION:
DATE:
REVISION:
DATE:
ISSUE DATE: 06/11/2025

CAD DWG FILE: T2234-01-6260-8136260012-G-101
DRAWN BY: DMF
CHECKED BY: XXX
DESIGNED BY: DMF

SHEET TITLE:
CODE ANALYSIS PLAN

SHEET NUMBER:
G-101

3 OF 32 SHEETS
JUNE 11, 2025

CAUTION:
INFORMATION ON THIS DRAWING CONCERNING TYPE AND LOCATION OF UNDERGROUND AND OTHER UTILITIES IS NOT GUARANTEED TO BE ACCURATE OR ALL INCLUSIVE. THE CONTRACTOR IS RESPONSIBLE FOR MAKING HIS OWN DETERMINATION AS TO THE TYPE AND LOCATION OF UNDERGROUND AND OTHER UTILITIES AS MAY BE NECESSARY TO AVOID DAMAGE THERETO.

811 Know what's below Call before you dig.

EXISTING CONDITIONS NOTES:

1. THE CONTRACTOR IS OBLIGATED TO INSPECT FOR EXISTING CONDITIONS/INSTALLATIONS AND AVAILABLE INFORMATION PRIOR TO SUBMITTING A BID, REFER TO SPECIFICATIONS ALSO.
2. EXISTING INSTALLATIONS (SUCH AS WATER MAINS/LINES, GAS MAINS/LINES, SEWER MAINS/LINES, TELEPHONE LINES, POWER LINES, AND UTILITY STRUCTURES IN THE VICINITY OF THE WORK TO BE DONE) ARE INDICATED ON THE DRAWINGS ONLY TO THE EXTENT THAT SUCH INFORMATION HAS BEEN MADE AVAILABLE TO OR DISCOVERED BY THE ENGINEER IN PREPARING THE DRAWINGS. THERE IS NO GUARANTEE AS TO THE ACCURACY OR COMPLETENESS OF SUCH INFORMATION, AND ALL RESPONSIBILITY FOR THE ACCURACY AND COMPLETENESS THEREOF IS EXPRESSLY DISCLAIMED.
3. THE CONTRACTOR SHALL BE SOLELY RESPONSIBLE FOR LOCATING ALL EXISTING INSTALLATIONS.
4. ANY DELAY, ADDITIONAL WORK, FEES OR EXTRA COST TO THE CONTRACTOR CAUSED BY OR RESULTING FROM DAMAGE TO OR MODIFICATION OF EXISTING INSTALLATIONS BY THE CONTRACTOR OR AFFECTED UTILITY COMPANY SHALL NOT CONSTITUTE A CLAIM FOR EXTRA WORK. ADDITIONAL PAYMENT OR DAMAGES.
5. THE CONTRACTOR SHALL FIELD VERIFY ALL EXISTING CONSTRUCTION PRIOR TO SUBMITTING HIS BID. NO EXTRAS WILL BE PAID DUE TO UNANTICIPATED EXISTING CONDITIONS/INSTALLATIONS.

GENERAL NOTES

(A) REFER TO PROJECT MANUAL FOR ADDITIONAL REQUIREMENTS.

(B) SITE CONDITIONS BASED UPON SURVEY. FIELD VERIFY EXISTING CONDITIONS BY DETAILED INSPECTION PRIOR TO SUBMITTING BID AND BEGINNING CONSTRUCTION. NOTIFY ARCHITECT IF EXISTING CONDITIONS DEVIATE SUBSTANTIALLY FROM THOSE INDICATED HEREIN.

(C) SITE DIMENSIONS TO FACE OF CONCRETE FOUNDATION, SIDEWALK, CURB GUTTER LINE, PROPERTY LINE, OR CENTER LINE OF STRIPING UNLESS OTHERWISE NOTED. REFER TO ARCHITECTURAL DRAWINGS FOR BUILDING LAYOUT DIMENSIONS.

(D) LAWN AREAS DISTURBED BY CONSTRUCTION ACTIVITIES TO BE PROVIDED WITH 4" APPROVED TOPSOIL, FINE GRADED, AND SEEDED. PROVIDE EROSION CONTROL FABRIC EXTENDING 48" MINIMUM BEYOND EACH SIDE OF CENTERLINE OF DRAINAGE CHANNELS AND WHERE GRADE SLOPES 4:12 OR GREATER. REFER TO SITE GRADING PLAN FOR ADDITIONAL REQUIREMENTS.

(E) COORDINATE WORK WITH OTHER SITE RELATED DEVELOPMENT DRAWINGS.

(F) CONTRACTOR TO COORDINATE AND SCHEDULE DESIGNATED PARKING AND STAGING AREAS WITH OWNER.

KEY NOTES

1. VEHICLE GRAVEL OVER COMPACTED SUBGRADE, REFER TO DETAIL 1/C-102.
2. CONCRETE PAVEMENT, REFER TO DETAIL 2/C-102. ACCESSIBLE PARKING SPACES WITH ACCESS AISLES (ADA COMPLIANT) TO SLOPE 2% MAXIMUM IN ALL DIRECTIONS.
3. CONCRETE SIDEWALK, REFER TO DETAIL 3/C-102. PROVIDE #3 X 1'-6" DOWELS AT 24" O.C. EXTENDING 6" MINIMUM INTO FOUNDATION WITH EPOXY.
4. ACCESSIBLE PARKING PAVEMENT STRIPING SYMBOL, REFER TO DETAIL 4/C-102. ALIGN WITH END OF PARKING SPACE.
5. ACCESSIBLE PARKING SIGN, REFER TO DETAIL 5/C102.
6. 6' GALVANIZED CHAIN LINK FENCE AND LOCKABLE GATE (APPROXIMATELY 9'-6"x34'-0").
7. 4" WIDE PAVEMENT STRIPING AS SHOWN USING HIGHWAY MARKING PAINT - WHITE (2 COATS) [ALTERNATE #1].
8. CONCRETE BUMPER BLOCK (8" W X 5" H X 6'-0" LONG) ANCHORED TO PAVING WITH (2) 1'-6" LONG #4 REBAR. [ALTERNATE #1 REQUIRES BUMPERS AT HEADS OF EVERY STALL].
9. GROUND MOUNTED ELECTRICAL TRANSFORMER. REFER TO INFRASTRUCTURE PROJECT T2123-01 (BY OTHERS), SITE UTILITY PLAN AND SITE ELECTRICAL DRAWINGS FOR ADDITIONAL ELECTRICAL REQUIREMENTS. COORDINATE INSTALLATION WITH LOCAL UTILITY COMPANY REQUIREMENTS. NOTIFY ARCHITECT IMMEDIATELY IF THERE ARE ANY CONFLICTS WITH CONSTRUCTION DOCUMENTS AND LOCAL REQUIREMENTS.
10. DRAINAGE PIPING BELOW PARKING LOT, SEE SITE GRADING PLAN (C103).
11. UNDERGROUND DOWNSPOUT COLLECTION SYSTEM. REFER TO SITE GRADING PLAN (C-103) AND ARCHITECTURAL DRAWINGS FOR ADDITIONAL REQUIREMENTS.
12. APRON AROUND PIPING, REFER TO SITE GRADING PLAN (C-103).

UTILITY CONTACTS

WATER, SEWER, & TELE COM:
MISSOURI NATIONAL GUARD
6819 N. BOUNDARY ROAD
JEFFERSON CITY, MO 65101
CONTACT: JEREMY NEWTON
P: (573) 690-1416

ELECTRIC:
LIBERTY UTILITIES
1501 INDUSTRIAL DRIVE
NEOSHO, MO 64850
CONTACT: BRAD LETT
P: (417) 625-6136

GAS:
SPIRE
520 E. 5TH STREET
JOPLIN, MO 64801
CONTACT: DUSTIN BORLAND
P: (417) 626-4837

SYMBOLS LEGEND

NOTE: REFER TO SURVEY FOR EXISTING CONDITIONS SYMBOLS LEGEND.

- NEW BUILDING CONSTRUCTION
- NEW AREA OF CONCRETE PAVING
- NEW AREA OF CONCRETE SIDEWALK
- NEW DRIVE GRAVEL RIP-RAP AREA
- NEW AREA OF CONCRETE PAVING
- NEW LIGHT POLE
- B3 BORING LOCATION - REFER TO GEOTECHNICAL REPORT, SEE C103

MANHOLE	ELECTRIC RISER
LIGHT POLE	GAS METER
STOP SIGN	SEWER CLEANOUT
WATER VALVE	BUMPER POST
CABLE RISER	FIRE HYDRANT
TELEPHONE RISER	

SANITARY SEWER	SS
WATER LINE	W
TELEPHONE LINE	TEL
GAS LINE	G
UNDERGROUND ELECTRIC	E
DOWNSPOUT COLLECTOR	SD
2" FIBER OPTIC CONDUIT	FO

TRUE NORTH

1 C-103 SITE DEVELOPMENT PLAN
1"= 30'-0"

STATE OF MISSOURI
MICHAEL L. KEHOE,
GOVERNOR

MISSOURI DAVID MICHAEL FROHLING NUMBER A-2010011354 ARCHITECT 2025 06 11

David Michael Frohling
A-2010011354

GASKIN HILL NORCROSS OF MISSOURI, INC.
300 South Jefferson Avenue, Suite 301, Springfield, MO 65806
417.869.0719
www.ghnae.com

OFFICE OF
ADMINISTRATION
DIVISION OF FACILITIES
MANAGEMENT, DESIGN
AND CONSTRUCTION

DEPT. OF PUBLIC SAFETY
MISSOURI NATIONAL GUARD
DEPT. OF ADJUTANT GENERAL

CONSTRUCT NEW
44 SOLDIER BARRACKS
BUILDING 757

CAMP CROWDER
TRAINING SITE
890 RAY A CARVER DRIVE
NEOSHO, MISSOURI

PROJECT # T2234-01
SITE # 6260
ASSET # 8136260012

REVISION:
DATE:
REVISION:
DATE:
REVISION:
DATE:
ISSUE DATE: 06/11/2025

CAD DWG FILE: T2234-01-6260-8136260012-C-101
DRAWN BY: DMF
CHECKED BY: XXX
DESIGNED BY: DMF

SHEET TITLE:
SITE DEVELOPMENT PLAN

SHEET NUMBER:
C-101

4 OF 32 SHEETS
JUNE 11, 2025

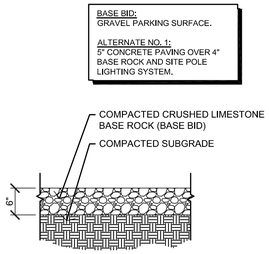

1 C-102 VEHICLE GRAVEL AREAS
SECTION
3/4" = 1'-0"

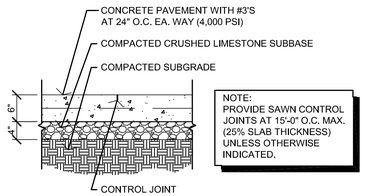

2 C-102 CONCRETE PAVING
SECTION
3/4" = 1'-0"

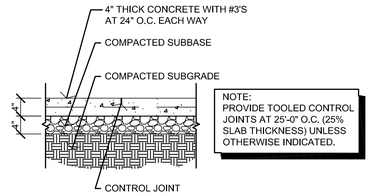

3 C-102 CONCRETE SIDEWALK
SECTION
3/4" = 1'-0"

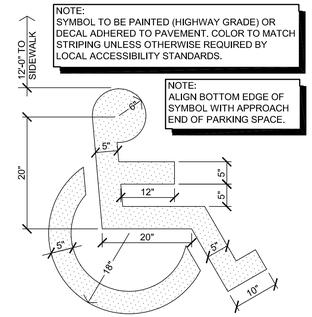

4 C-102 ACCESSIBLE PARKING SYMBOL
DETAIL
NOT TO SCALE

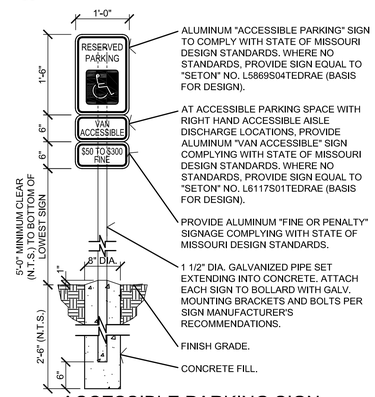

5 C-102 ACCESSIBLE PARKING SIGN
DETAIL
3/4" = 1'-0"

6 C-102 NOT USED
NO SCALE

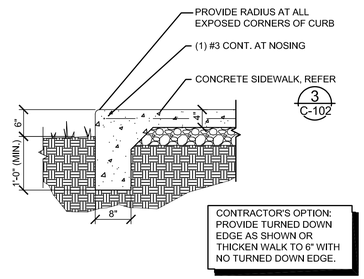

7 C-102 CONCRETE SIDEWALK EDGE
SECTION
3/4" = 1'-0"

GENERAL NOTES

A REFER TO PROJECT MANUAL FOR ADDITIONAL REQUIREMENTS.

B REFER TO SITE DEVELOPMENT PLANS FOR LAYOUT AND LOCATIONS OF CONSTRUCTION.

STATE OF MISSOURI
MICHAEL L. KEHOE,
GOVERNOR

David Michael Frohling
A-2010011354

GASKIN HILL NORCROSS OF MISSOURI, INC.
300 South Jefferson Avenue, Suite 301, Springfield, MO 65806
417.869.0719
www.ghnae.com

OFFICE OF ADMINISTRATION
DIVISION OF FACILITIES MANAGEMENT, DESIGN AND CONSTRUCTION

DEPT. OF PUBLIC SAFETY
MISSOURI NATIONAL GUARD
DEPT. OF ADJUTANT GENERAL

CONSTRUCT NEW
44 SOLDIER BARRACKS
BUILDING 757

CAMP CROWDER
TRAINING SITE
890 RAY A CARVER DRIVE
NEOSHO, MISSOURI

PROJECT # T2234-01
SITE # 6260
ASSET # 8136260012

REVISION:
DATE:
REVISION:
DATE:
REVISION:
DATE:
ISSUE DATE: 06/11/2025

CAD DWG FILE: T2234-01-6260-8136260012-C-102
DRAWN BY: DMF
CHECKED BY: XXX
DESIGNED BY: DMF

SHEET TITLE:
SITE DEVELOPMENT DETAILS

SHEET NUMBER:
C-102

JUNE 11, 2025

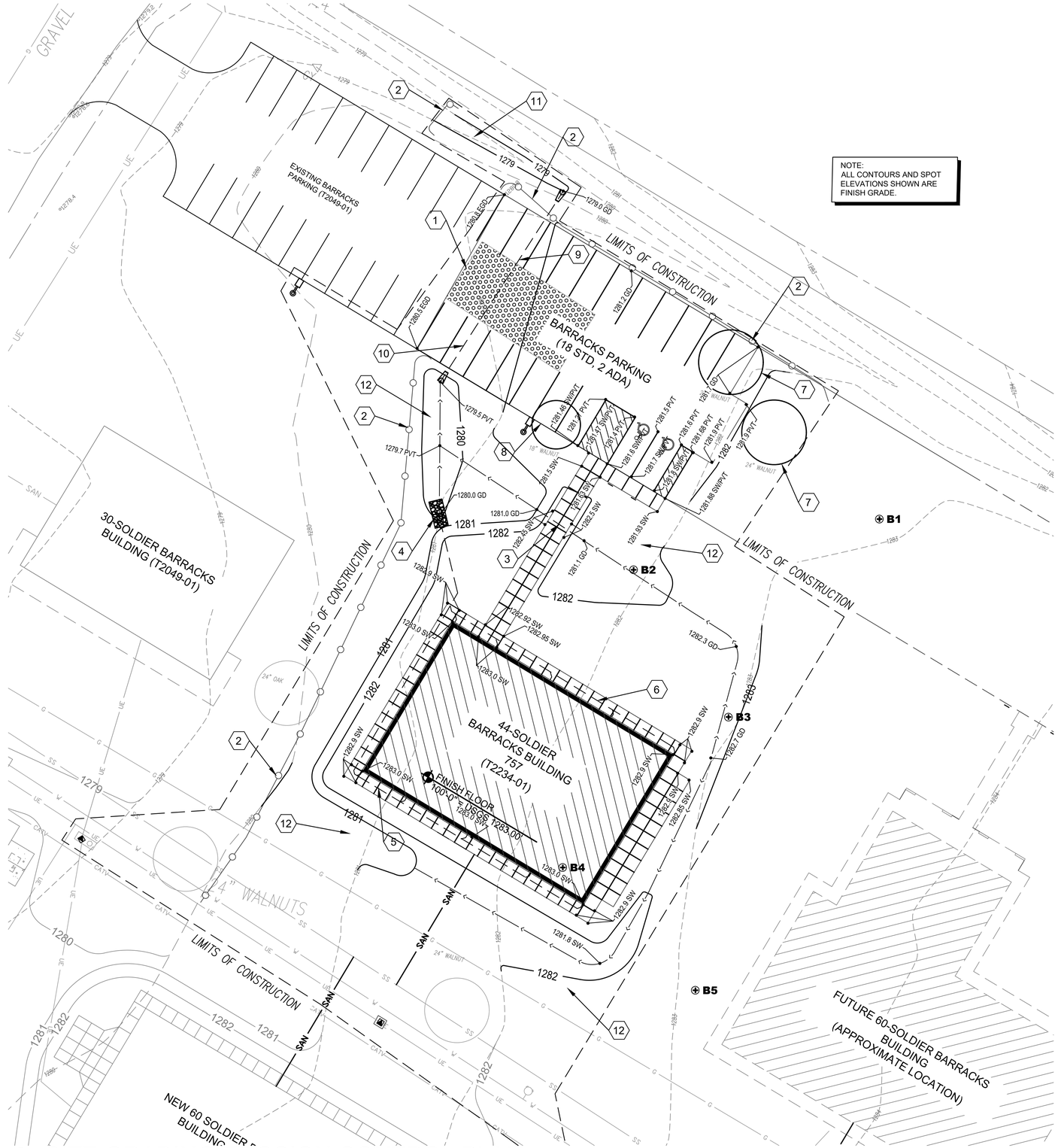

NOTE:
ALL CONTOURS AND SPOT ELEVATIONS SHOWN ARE FINISH GRADE.

1 C-103 SITE GRADING/EROSION CONTROL PLAN
1"=20'-0"

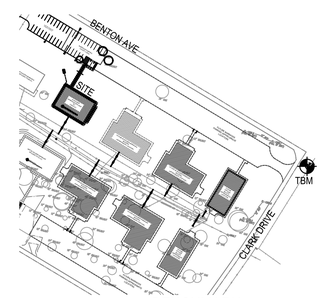

BENCHMARK
TBM IS THE BOLT IN MUELLER NAME ON FLANGE OF FIRE HYDRANT AT THE INTERSECTION OF CLARK DRIVE AND BENTON AVENUE, WITH AN ELEVATION OF 1293.76 FEET.

NORTH

GENERAL NOTES

A. REFER TO PROJECT MANUAL FOR ADDITIONAL REQUIREMENTS.

B. FIELD VERIFY SANITARY SEWER SERVICE CONNECTION INVERT PRIOR TO ESTABLISHING FINAL FINISH FLOOR ELEVATION. NOTIFY ENGINEER IF EXISTING CONDITIONS REQUIRE REVISED FINISH FLOOR ELEVATION TO PROVIDE PROPER DRAINAGE.

C. COORDINATE WORK WITH OTHER SITE RELATED DEVELOPMENT DRAWINGS.

D. HANDICAP ACCESSIBLE PARKING AREAS TO SLOPE 2% MAXIMUM IN ALL DIRECTIONS. DESIGNATED ACCESSIBLE ROUTES TO SLOPE 5% MAXIMUM IN DIRECTION OF TRAFFIC WITH A 2% MAXIMUM CROSS SLOPE.

PIPE NOTES

1. PIPE MATERIALS SHALL BE IN ACCORDANCE WITH AND AS APPROVED BY THE COUNTY OR APPLICABLE AUTHORITY. REINFORCED CONCRETE PIPE (RCP), HIGH DENSITY POLYETHYLENE (HDPE), N-12 CORRUGATED METAL PIPE (CMP) MAY BE USED AS ALLOWED BY LOCAL GUIDELINES.
2. ALL PIPE IS TO BE INSTALLED PER THE MANUFACTURER'S REQUIREMENTS AND MEET COVER REQUIREMENTS PER THE MANUFACTURER AND GOVERNING AUTHORITY.

KEY NOTES

1. CONSTRUCTION ENTRANCE, REFER TO DETAIL ON C-501.
2. SILT FENCE, REFER TO DETAIL ON C-501.
3. 20 LF OF 8"Ø PIPE W/ FES ON BOTH ENDS @ 0.5% SLOPE.
4. 5' X 5' RIPRAP PAD, REFER DETAIL ON C-501
5. INSTALL 206 LF OF 8" HDPE DOWNSPOUT COLLECTION SYSTEM AT MIN. 0.5% SLOPE. DAYLIGHT PIPE AT INV = 1280.0'. REFER TO DETAIL ON C-501.
6. INSTALL 100 LF OF 8" HDPE DOWNSPOUT COLLECTION SYSTEM AT MIN. 0.5% SLOPE. CONNECT TO PIPE 5 AT INV = 1280.2', REFER TO DETAIL ON C-501.
7. EXISTING 24" WALNUT TREE TO BE REMOVED.
8. EXISTING 18" WALNUT TREE TO BE REMOVED.
9. 87 LF OF 8"Ø PIPE W/ FES ON BOTH ENDS @ 0.5% SLOPE.
10. INSTALL 12"Ø RCP UNDER PROPOSED PARKING LOT IN EXISTING DRAIN SWALE TO DITCH ALONG STREET. REGRADE AS REQUIRED TO PROVIDE POSITIVE DRAINAGE TO DITCH ALONG STREET.
11. RE-GRADE EXISTING DITCH AS REQUIRED TO INSTALL PIPES UNDER PARKING LOT. PROVIDE MIN. OF 1% SLOPE IN BOTTOM OF DITCH.
12. INSTALL TOPSOIL AND SEE ALL DISTURBED AREAS ON-SITE PER SEEDING & MULCHING NOTES ON SHEET C-501.

ALTERNATE #1:
CONCRETE PARKING LOT PAVEMENT & LIGHT POLES ALONG SOUTH SIDE OF PARKING LOT.

SYMBOLS LEGEND

- NEW BUILDING CONSTRUCTION
- NEW AREA OF CONCRETE PAVING
- NEW AREA OF CONCRETE SIDEWALK
- NEW DRIVE GRAVEL AREA
- NEW LIGHT POLE
- B1 BORE HOLE
- NEW SILT FENCE CONSTRUCTION

CAUTION:
INFORMATION ON THIS DRAWING CONCERNING TYPE AND LOCATION OF UNDERGROUND AND OTHER UTILITIES IS NOT GUARANTEED TO BE ACCURATE OR ALL INCLUSIVE. THE CONTRACTOR IS RESPONSIBLE FOR MAKING HIS OWN DETERMINATION AS TO THE TYPE AND LOCATION OF UNDERGROUND AND OTHER UTILITIES AS MAY BE NECESSARY TO AVOID DAMAGE THERETO.

811 Know what's below. Call before you dig.

STATE OF MISSOURI
MICHAEL L. KEHOE,
GOVERNOR

STATE OF MISSOURI
AARON T. HARGRAVE
NUMBER PE-2007020274
PROFESSIONAL ENGINEER
06-11-25

OWN
Engineering beyond.™

3213 S. West Bypass
Springfield, MO 65807
417.866.2741
weareown.com

FORMERLY ANDERSON ENGINEERING

OFFICE OF ADMINISTRATION
DIVISION OF FACILITIES MANAGEMENT, DESIGN AND CONSTRUCTION

DEPT. OF PUBLIC SAFETY
MISSOURI NATIONAL GUARD
DEPT. OF ADJUTANT GENERAL

CONSTRUCT NEW
44 SOLDIER BARRACKS
BUILDING 757

CAMP CROWDER
TRAINING SITE
890 RAY A CARVER DRIVE
NEOSHO, MISSOURI

PROJECT # T2234-01
SITE # 6260
ASSET # 8136260012

REVISION:
DATE:
REVISION:
DATE:
REVISION:
DATE:
ISSUE DATE: 06/11/2025

CAD DWG FILE: 6260-8136260012-C-103
DRAWN BY: ATH
CHECKED BY: ATH
DESIGNED BY: ATH

SHEET TITLE:
SITE GRADING/ EROSION CONTROL PLAN

SHEET NUMBER:
C-103

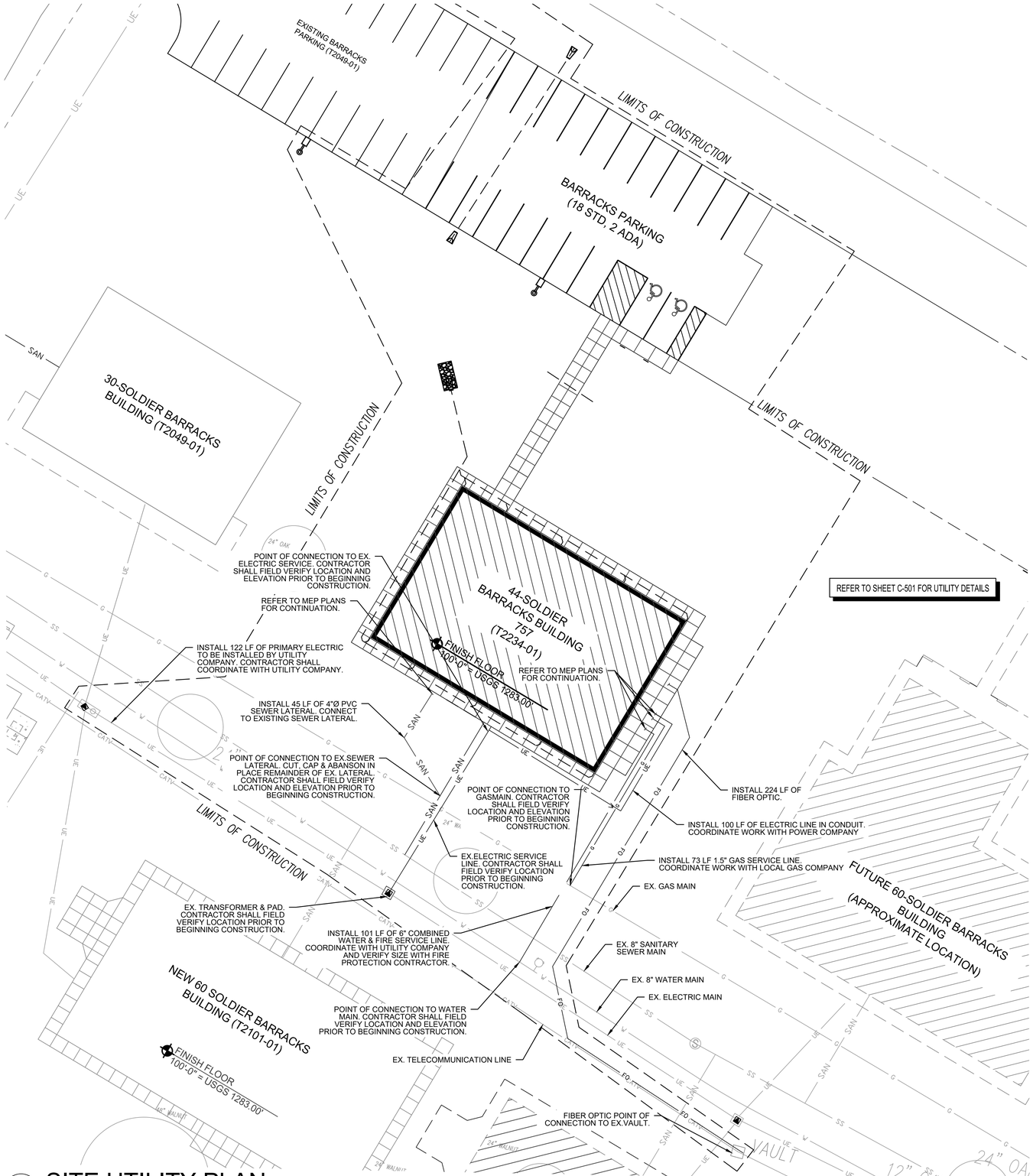

1 C-104 SITE UTILITY PLAN
1"=20'-0"

CONTRACTOR CAUTION!! VERIFY SEWER LINE ELEVATION

BEFORE STARTING ANY BUILDING PAD GRADING AND PLUMBING WORK THE CONTRACTOR SHALL FIELD VERIFY LOCATION, MATERIAL, CONDITION, ACCESSIBILITY (INCLUDING STATE HIGHWAY OR OTHER RIGHTS-OF-WAY) AND WORKABLE FLOW LINE ELEVATION OF THE EXISTING SANITARY SEWER SERVICE LINE OR MAIN.

EXISTING CONDITIONS NOTES:

1. THE CONTRACTOR IS OBLIGATED TO INSPECT FOR EXISTING CONDITIONS/INSTALLATIONS AND AVAILABLE INFORMATION PRIOR TO SUBMITTING A BID, REFER TO SPECIFICATIONS ALSO.
2. EXISTING INSTALLATIONS (SUCH AS WATER MAINS/LINES, GAS MAINS/LINES, SEWER MAINS/LINES, TELEPHONE LINES, POWER LINES, AND UTILITY STRUCTURES IN THE VICINITY OF THE WORK TO BE DONE) ARE INDICATED ON THE DRAWINGS ONLY TO THE EXTENT THAT SUCH INFORMATION HAS BEEN MADE AVAILABLE TO OR DISCOVERED BY THE ENGINEER IN PREPARING THE DRAWINGS. THERE IS NO GUARANTEE AS TO THE ACCURACY OR COMPLETENESS OF SUCH INFORMATION, AND ALL RESPONSIBILITY FOR THE ACCURACY AND COMPLETENESS THEREOF IS EXPRESSLY DISCLAIMED.
3. THE CONTRACTOR SHALL BE SOLELY RESPONSIBLE FOR LOCATING ALL EXISTING INSTALLATIONS.
4. ANY DELAY, ADDITIONAL WORK, FEES OR EXTRA COST TO THE CONTRACTOR CAUSED BY OR RESULTING FROM DAMAGE TO OR MODIFICATION OF EXISTING INSTALLATIONS BY THE CONTRACTOR OR AFFECTED UTILITY COMPANY SHALL NOT CONSTITUTE A CLAIM FOR EXTRA WORK, ADDITIONAL PAYMENT OR DAMAGES.
5. THE CONTRACTOR SHALL FIELD VERIFY ALL EXISTING CONSTRUCTION PRIOR TO SUBMITTING HIS BID. NO EXTRAS WILL BE PAID DUE TO UNANTICIPATED EXISTING CONDITIONS/INSTALLATIONS.

SPECIAL NOTE:
ANY BELOW-GRADE UTILITIES ENTERING THE BUILDING SHOULD HAVE CLAY STOPS PLACED AROUND THE UTILITY TO REDUCE WATER IN THE UTILITY TRENCH BACKFILL FROM ENTERING BELOW THE FOOTING AND/OR SLAB CAUSING SWELLING.

SPECIAL NOTE:
CONTRACTOR IS RESPONSIBLE FOR ALL PUBLIC UTILITY CONNECTIONS (ELECTRIC, WATER, GAS, SEPTIC, SEWER) AS WELL AS PROVIDING ALL INFRASTRUCTURE REQUIRED BY UTILITY COMPANIES.

GENERAL NOTES

A. REFER TO PROJECT MANUAL FOR ADDITIONAL REQUIREMENTS.

B. FIELD VERIFY SANITARY SEWER SERVICE CONNECTION INVERT PRIOR TO ESTABLISHING FINAL FINISH FLOOR ELEVATION. NOTIFY ENGINEER IF EXISTING CONDITIONS REQUIRE REVISED FINISH FLOOR ELEVATION TO PROVIDE PROPER DRAINAGE.

C. COORDINATE WORK WITH OTHER SITE RELATED DEVELOPMENT DRAWINGS.

D. HANDICAP ACCESSIBLE PARKING AREAS TO SLOPE 2% MAXIMUM IN ALL DIRECTIONS. DESIGNATED ACCESSIBLE ROUTES TO SLOPE 5% MAXIMUM IN DIRECTION OF TRAFFIC WITH A 2% MAXIMUM CROSS SLOPE.

E. A GEOTECHINCAL INVESTIGATION WAS CONDUCTED FOR THIS PROJECT. THIS GEOTECHNICAL INVESTIGATION REPORT SHOULD BE CONSIDERED AN INTEGRAL PART OF THESE CONTRACT DOCUMENTS. CONTRACTORS WILL BE RESPONSIBLE FOR OBTAINING, REVIEWING, AND UNDERSTANDING THE GEOTECHIINCAL INVESTIGATION REPORT. CONTRACTORS WILL BE EXPECTED TO FOLLOW THE RECOMMENDATIONS MADE WITHIN THE GEOTECHINCAL INVESTIGATION REPORT, THE REQUIREMENTS OF THE CITY SPECIFICATIONS, AND THE NOTES AND DETAILS OF THE DRAWINGS, WHICHEVER IS MOST STRINGENT.

F. IF MORE THAN ONE ACRE IS BEING DISTURBED THE CONTRACTOR WILL BE RESPONSIBLE FOR OBTAINING A LAND DISTURBANCE PERMIT FROM THE MISSOURI DEPARTMENT OF NATURAL RESOURCES.
REFER TO SECTION 01 57 00 OF THE SPECIFICATIONS.

UTILITY CONTACTS

WATER, SEWER, & TELE COM:
MISSOURI NATIONAL GUARD
6819 N. BOUNDARY ROAD
JEFFERSON CITY, MO 65101
CONTACT: JEREMY NEWTON
P: (573) 690-1416

ELECTRIC:
LIBERTY UTILITIES
1501 INDUSTRIAL DRIVE
NEOSHO, MO 64850
CONTACT: BRAD LETT
P: (417) 625-6136

GAS:
SPIRE
520 E. 5TH STREET
JOPLIN, MO 64801
CONTACT: DUSTIN BORLAND
P: (417) 626-4837

SYMBOLS LEGEND

- MANHOLE
- LIGHT POLE
- STOP SIGN
- WATER VALVE
- CABLE RISER
- TELEPHONE RISER
- ELECTRIC RISER
- GAS METER
- SEWER CLEANOUT
- BUMPER POST
- FIRE HYDRANT
- SANITARY SEWER — SS
- WATER LINE — W
- TELEPHONE LINE — TEL
- GAS LINE — G
- UNDERGROUND ELECTRIC — E
- DOWNSPOUT COLLECTOR — SD
- 2" FIBER OPTIC CONDUIT — FO

CAUTION:
INFORMATION ON THIS DRAWING CONCERNING TYPE AND LOCATION OF UNDERGROUND AND OTHER UTILITIES IS NOT GUARANTEED TO BE ACCURATE OR ALL INCLUSIVE. THE CONTRACTOR IS RESPONSIBLE FOR MAKING HIS OWN DETERMINATION AS TO THE TYPE AND LOCATION OF UNDERGROUND AND OTHER UTILITIES AS MAY BE NECESSARY TO AVOID DAMAGE THERETO.

811 Know what's below Call before you dig.

STATE OF MISSOURI
MICHAEL L. KEHOE, GOVERNOR

STATE OF MISSOURI
AARON T. HARGRAVE
NUMBER PE-2007020274
PROFESSIONAL ENGINEER
06-11-25

OWN
Engineering beyond.™

3213 S. West Bypass
Springfield, MO 65807
417.866.2741
weareown.com

FORMERLY ANDERSON ENGINEERING

OFFICE OF ADMINISTRATION
DIVISION OF FACILITIES MANAGEMENT, DESIGN AND CONSTRUCTION

DEPT. OF PUBLIC SAFETY
MISSOURI NATIONAL GUARD
DEPT. OF ADJUTANT GENERAL

CONSTRUCT NEW
44 SOLDIER BARRACKS
BUILDING 757

CAMP CROWDER
TRAINING SITE
890 RAY A CARVER DRIVE
NEOSHO, MISSOURI

PROJECT # T2234-01
SITE # 6260
ASSET # 8136260012

REVISION:
DATE:
REVISION:
DATE:
REVISION:
DATE:
ISSUE DATE: 06/11/2025

CAD DWG FILE: 6260-8136260012-C-104
DRAWN BY: ATH
CHECKED BY: ATH
DESIGNED BY: ATH

SHEET TITLE:
SITE UTILITY PLAN

SHEET NUMBER:
C-104

JUNE 30, 2023

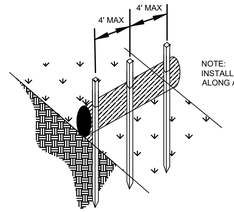

TYPICAL FIBER ROLL INSTALLATION

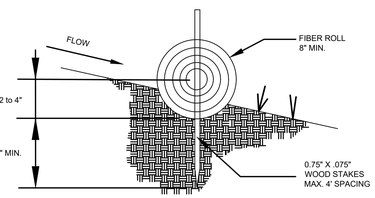

ENTRENCHING DETAILS

NOTE: EROSION CONTROL DEVICE SHALL BE INSTALLED PER MANUFACTURER'S SPECIFICATIONS AND STANDARDS AND IN ACCORDANCE WITH STATE AND LOCAL LAWS.

1 FIBER ROLLS AND SOCKS

C501 SCALE: NOT TO SCALE

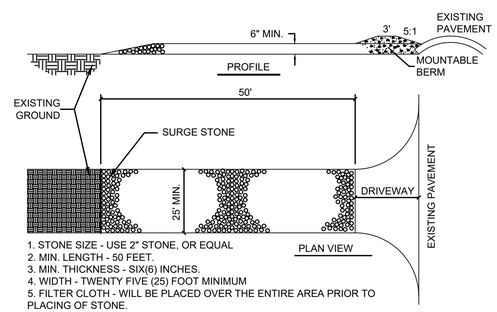

1. STONE SIZE - USE 2" STONE, OR EQUAL
2. MIN. LENGTH - 50 FEET.
3. MIN. THICKNESS - SIX(6) INCHES.
4. WIDTH - TWENTY FIVE (25) FOOT MINIMUM
5. FILTER CLOTH - WILL BE PLACED OVER THE ENTIRE AREA PRIOR TO PLACING OF STONE.
6. SURFACE WATER - ALL SURFACE WATER FLOWING OR DIVERTED TOWARD CONSTRUCTION ENTRANCES SHALL BE PIPED ACROSS THE ENTRANCE.
7. MAINTENANCE - THE ENTRANCE SHALL BE MAINTAINED IN A CONDITION WHICH WILL PREVENT TRACKING OR FLOWING OF SEDIMENT ONTO PUBLIC RIGHTS-OF-WAY. THIS MAY REQURE PERIODIC TOP DRESSING WITH ADDITIONAL STONE AS CONDITIONS DEMAND, AND REPAIR AND/OR CLEANOUT OF ANY MEASURES USED TO TRAP SEDIMENT. ALL SEDIMENT SPILLED, DROPPED, WASHED OR TRACKED ONTO PUBLIC RIGHTS-OF-WAY MUST BE REMOVED IMMEDIATELY.

2 CONSTRUCTION ENTRANCE

C501 SCALE: NOT TO SCALE

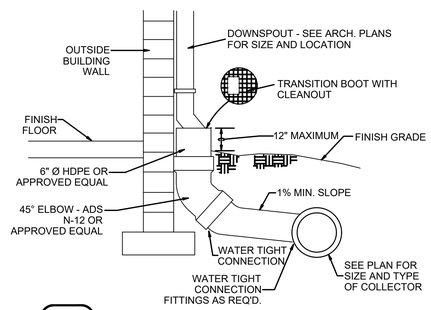

3 DOWNSPOUT COLLECTOR

C501 SCALE: NOT TO SCALE

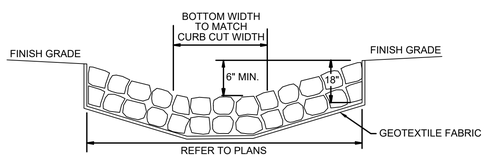

NOTES:
1. HAND PLACE RIP-RAP IN ALL PLACES AS INDICATED ON THE PLAN.
2. THE STONE FOR RIP-RAP SHALL CONSIST OF FIELD STONE OR ROUGH UNHEWN QUARRY STONE AS NEARLY AS UNIFORM, IN SECTION AS PRACTICAL.
3. THE STONES SHALL BE DENSE, RESISTANT TO THE ACTION OF AIR AND WATER, AND SUITABLE IN ALL ASPECTS FOR THE PURPOSE INTENDED UNLESS OTHERWISE SPECIFIED.
4. ALL STONES USED AS RIP-RAP SHALL WEIGH BETWEEN 50-150 POUNDS EACH, AND AT LEAST 60 PERCENT OF THE STONES SHALL WEIGH MORE THAN 100 POUNDS EACH.
5. STONES SHALL BE A MINIMUM OF 12" IN DIAMETER AND PLACED A MINIMUM OF 18" BELOW FINISH GRADE.
6. RIPRAP PAD SHALL HAVE NO SLOPE FOR THE LENGTH OF THE RIPRAP PAD.
7. FINISHED GRADE ADJACENT TO THE RIPRAP PAD SHALL BE A MINIMUM OF 6" ABOVE THE RIRPRAP PAD BOTTOM.

4 RIPRAP PAD

C501 SCALE: NOT TO SCALE

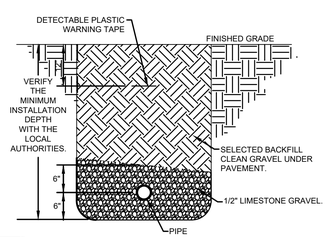

5 PIPE INSTALLATION DETAIL

C501 SCALE: NOT TO SCALE

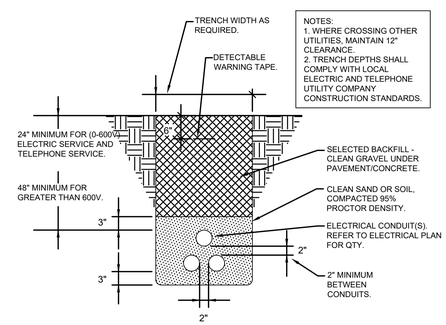

NOTES:
1. WHERE CROSSING OTHER UTILITIES, MAINTAIN 12" CLEARANCE.
2. TRENCH DEPTHS SHALL COMPLY WITH LOCAL ELECTRIC AND TELEPHONE UTILITY COMPANY CONSTRUCTION STANDARDS.

6 UNDERGROUND ELECTRICAL CONDUITS

C501 SCALE: NOT TO SCALE

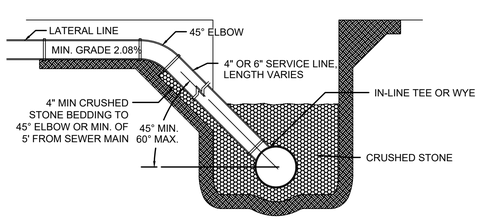

NOTES:
1. LATERAL LINE TO HAVE 18" MIN COVER FOR ENTIRE LENGTH

7 SANITARY SEWER SERVICE CONNECTION

C501 SCALE: NOT TO SCALE

EROSION CONTROL & MAINTENANCE PLAN NOTES:

1. CONTRACTOR TO RETAIN FLOATABLE WIND BLOWN MATERIALS ON SITE BY STORING ALL TRASH AND BUILDING MATERIAL WASTE IN ENCLOSURES UNTIL PROPER DISPOSAL AT OFF-SITE FACILITIES. CHECK ADJACENT AREAS DAILY AND PICK UP CONSTRUCTION WASTE MATERIALS AND DEBRIS THAT HAVE BLOWN OR WASHED OFF SITE.
2. PERMANENTLY STABILIZE ALL SURFACE AREA WITHIN AND ADJACENT TO THIS SITE THAT IS DISTURBED BY VEHICLES, GRADING AND OTHER CONSTRUCTION FOR THE PROPOSED FACILITY. STABILIZATION IS OBTAINED WHEN THE DISTURBED SURFACE IS COVERED WITH STRUCTURES, PAVING AND OR PERENNIAL VEGETATION HAVING A UNIFORM COVERAGE DENSITY OF AT LEAST 70%. STABILIZATION OF ALL DISTURBED AREA IS REQUIRED BEFORE TERMINATING MAINTENANCE AND REMOVAL OF EROSION CONTROL MEASURES.
3. CONTRACTORS SHALL INSPECT POLLUTION CONTROL MEASURES AT LEAST ONCE EVERY 7 DAYS AND WITHIN 24 HOURS AFTER A STORM EVENT OF 1/2 INCH OR GREATER. DAMAGED MEASURES THAT PROVE TO BE INEFFECTIVE SHALL BE REPLACED WITH MORE EFFECTIVE MEASURES OR ADDITIONAL MEASURES WITHIN SEVEN DAYS. REPEATED FAILURE OF A CONTROL MEASURE REQUIRES INSTALLATION OF A MORE SUITABLE DEVICE TO PREVENT DISCHARGE OF POLLUTANTS FROM THE CONSTRUCTION SITE.
4. INSTALLATION OF ADDITIONAL EROSION CONTROL MEASURES MAY BE REQUIRED BY THE CITY OR STATE. CONTRACTOR TO VERIFY REQUIREMENTS PRIOR TO BEGINNING ANY WORK ON PROJECT SITE.
5. CARE SHALL BE TAKEN TO ELIMINATE TO THE MAXIMUM EXTENT POSSIBLE THE ENCROACHMENT OF SEDIMENT INTO ALL STORM DRAIN APPURTENANCES, PUBLIC STREETS, AND ONTO PRIVATE PROPERTY UNTIL IMPERVIOUS MATERIAL (ROAD/PARKING AREA SURFACE) IS APPLIED OR UNTIL PROPOSED LANDSCAPE HAS BEEN ESTABLISHED.
6. REMOVE SEDIMENT DEPOSITS AS NECESSARY AFTER EACH STORM TO PROVIDE ADEQUATE STORAGE VOLUME FOR THE NEXT RAIN AND TO REDUCE PRESSURE ON THE FENCE. CARE NEEDS TO BE TAKEN TO AVOID UNDERMINING THE FENCE WHEN REMOVING SEDIMENT. SEDIMENT IS TO BE REAPPLIED TO THE SITE AND STABILIZED.
7. ALL GRASS SLOPES WHICH EXCEED 3:1 (H:V) AND SELECT PIPE OUTFALLS SHALL UTILIZE CONTECH CONSTRUCTION PRODUCTS PERMANENT TURF REINFORCEMENT MATS 450 OR APPROVED EQUAL. MATS SHALL BE INSTALLED PER MANUFACTURER'S SPECIFICATIONS AND STANDARDS. CONTRACTOR SHALL COORDINATE INSTALLATION INSPECTION WITH MANUFACTURER.
8. CONSTRUCTION METHODS AND MATERIALS SHALL CONFORM TO THE LATEST REVISIONS OF THE STANDARD GENERAL CONIDTIONS AND TECHNICAL SPECIFICATION FOR CONSTRUCTION FOR THE STATE OF MISSOURI.
9. APPLICABLE PERMITS MUST BE OBTAINED FROM THE CITY, STATE AND COUNTY PRIOR TO EXCAVATION WITHIN ANY RIGHT-OF-WAY, AND PRIOR TO ANY CONSTRUCTION.
10. IT SHALL BE THE CONTRACTOR'S RESPONSIBILITY TO DETERMINE THE LOCATION OF ANY UNDERGROUND UTILITIES OR OTHER OBSTRUCTIONS AND TO BE LIABLE FOR DAMAGE AND CONSEQUENT REPAIR TO SUCH IN THE COURSE OF HIS OPERATIONS.
11. THE CONTRACTOR AND/OR BUILDER WILL KEEP THE SUBDIVISION NEAT AND ORDERLY AT ALL TIMES WHILE CONSTRUCTION IS TAKING PLACE. ALL CITY STREETS ADJACENT TO THE DEVELOPMENT SHALL BE KEPT CLEAR OF MUD, ROCK, DIRT, DEBRIS, PAPER AND WASTE MATERIAL AT ALL TIMES. THE PROPER AMOUNT OF INSPECTION SHALL BE CALLED FOR AT THEIR PROPER TIMES, OR ANY AND ALL WORK MAY BE REJECTED.
12. IF ANY WORK OR ACCESS TO ANY ADJOINING PROPERTY IS DONE, IT IS THE FULL RESPONSIBILITY FOR THE APPLICANT/OWNER TO OBTAIN PROPER RELEASES FROM ADJOINING PROPERTY OWNERS AND ASSUME ALL LIABILITY FOR ACTION TAKEN DURING ALL CONSTRUCTION.
13. ALL DISTURBED AREAS ARE TO BE RESEEDED IN ACCORDANCE WITH THE CURRENT REQUIREMENTS OF THE STATE OF MISSOURI DESIGN STANDARDS FOR PUBLIC IMPROVEMENTS.
14. PROVIDE TEMPORARY EROSION CONTROL TO CONTAIN ALL SOILS ON SITE. COMPLY WITH GOVERNING REGULATIONS PERTAINING TO ENVIRONMENTAL PROTECTION.
15. THE DETENTION BASIN, ALL WATER QUALITY MEASURES AND STORMWATER CHANNELS/PIPES) SHALL BE FUNCTIONING PRIOR TO STARTING ANY OTHER CONSTRUCTION ACTIVITIES I.E., ONLY CONSTRUCTION ACTIVITIES REQUIRED TO INSTALL THE DETENTION BASIN, ALL WATER QUALITY MEASURES AND STORMWATER CHANNELS(PIPES) ARE ALLOWED UNTIL THESE ITEMS ARE INSTALLED AND APPROVED.
16. CONSTRUCTION ACCESS TO THE SITE SHALL BE LIMITED TO THE APPROVED TEMPORARY CONSTRUCTION ENTRANCE AS SHOWN ON THE STORMWATER POLLUTION PREVENTION PLAN.
17. PRIOR TO CONSTRUCTION, THE OWNER SHALL CONVENE A PRE-CONSTRUCTION MEETING BETWEEN THE STATE OF MISSOURI, CONSULTING ENGINEER, CONTRACTOR(S) AND ANY OTHER AFFECTED PARTIES.
18. EROSION CONTROL DEVICES SHALL BE MAINTAINED DURING THE WHOLE CONSTRUCTION PERIOD BY THE CONTRACTOR.
19. CONTRACTOR TO PROTECT ANY STORM INLETS THAT RECEIVE STORM WATER FROM THE AREA OF CONSTRUCTION FROM SEDIMENT.
20. CONTRACTOR TO TAKE CARE NOT TO DAMAGE ANY EXISTING STREET, CURB AND GUTTER, SIDEWALK AND DRIVEWAYS.
21. THE CONTRACTOR SHALL HAVE A SET OF PLANS FILED WITH THE STATE OF MISSOURI ON SITE. THE CONTRACTOR SHALL HAVE ON THE PROJECT AT ALL TIMES, AS HIS AGENT, A COMPETENT SUPERINTENDENT CAPABLE OF READING AND THOROUGHLY UNDERSTAND THE PLANS AND SPECIFICATIONS AND THOROUGHLY EXPERIENCE IN THE TYPE WORK BEING PERFORMED WHO SHALL RECEIVE INSTRUCTIONS FROMTHE ENGINEER OR HIS AUTHORIZED REPRESENTATIVE.
22. THE CONTRACTOR SHALL NOTIFY THE INSPECTOR OF ANY NEW SINKHOLES DISCOVERED DURING CONSTRUCTION.
23. TEMPORARY CONSTRUCTION ENTRANCE TO HAVE SHOT ROCK FOR ITS SURFACE.
24. THE INSTALLATION OF SILT FENCE FOR CONSTRUCTION IS TO BE INSTALLED BY THE CONTRACTOR AND IN PLACE BEFORE BEGINNING SITE CONSTRUCTION. SIMILAR DEVICES MAY BE USED BY THE CONTRACTOR TO MEET THE REQUIREMENTS OF THE ENGINEER. DEVICES TO BE IN PLACE AS SHOWN ON THE PLANS. ADJUSTMENT OF THE LOCATION BY THE CONTRACTOR MAY BE DONE TO MEET EXISTING FIELD CONDITIONS. ALL CONTROLS ARE TO BE LACED WITHIN OWNER'S PROPERTY. ACCUMULATED SEDIMENT IN BASINS WILL REQUIRE REMOVAL DURING CONSTRUCTION OR AFTER EACH RAIN EVENT AND AT THE END OF CONSTRUCTION. EACH BASIN SHALL BE CHECKED AFTER EACH RAIN EVENT. CONTRACTOR TO MINIMIZE THE AREA DISTURBED BY CONSTRUCTION ACTIVITIES AT ANY ONE TIME AND TO PROMPTLY REVEGETATE (OR MECHANICALLY STABILIZE) ARE DISTURBED BY CONSTRUCTION ACTIVITY.
25. SILT FENCE SHALL BE PLACED AROUND ALL SOIL SPOIL PILES TO PREVENT EROSION.
26. REFER TO SECTION 01 57 00 OF THE SPECIFICATIONS.

SEEDING AND MULCHING NOTES

SEEDING

INSTALL UPSTREAM BMPS TO PROTECT AREA TO BE SEEDED. COMPLETE GRADING AND REMOVE ALL DEBRIS LARGER THAN 1 INCH. LOOSEN COMPACTED SOILS TO A DEPTH OF 4 INCHES. GROOVE OR FURROW ON THE CONTOUR IF NECESSARY. SPREAD LOOSE TOPSOIL AT A DEPTH OF 4 INCHES. MIX SOIL AMENDMENTS (LIME, FERTILIZER, ETC.) INTO THE TOP 4 INCHES OF SOIL. PLANT SEED ½ TO ¼ INCHES DEEP USING A CYCLONE SEEDER, DRILL, CULTIPACKER SEEDER, OR HYDRO-SEEDER. ROLL LIGHTLY TO FIRM SURFACE. COVER SEEDED AREA WITH MULCH. INSTALL ADDITIONAL STABILIZATION (EROSION CONTROL BLANKETS, NETTING, BONDED FIBER MATRIX, ETC.) ON SLOPES STEEPER THAN 3:1 AND IN AREAS OF CONCENTRATED FLOW. WATER IMMEDIATELY-ENOUGH TO SOAK 4 INCHES INTO THE SOIL WITHOUT CAUSING RUNOFF.

TOPSOIL REQUIREMENTS

PERMANENT AND TEMPORARY SEEDING: LOOSEN COMPACTED SOILS TO A DEPTH OF 4 INCHES. IF RAINFALL CAUSES SURFACE TO BECOME SEALED OR CRUSTED, LOOSEN IT JUST PRIOR TO SEEDING. SLOPES STEEPER THAN 33 PERCENT (3:1) GRADE SHOULD BE GROOVED OR FURROWED ON THE CONTOUR BEFORE SEEDING. A GOOD SEEDBED IS WELL PULVERIZED, LOOSE AND UNIFORM. PERMANENT SEEDING: A MINIMUM OF 4 INCHES OF LOOSE TOPSOIL SHOULD BE SPREAD ON AREAS TO BE SEEDED.

LIME REQUIREMENTS

PERMANENT AND TEMPORARY SEEDING: LIME SHOULD BE APPLIED ACCORDING TO SOIL TEST RECOMMENDATIONS. IF THE pH OF THE SOIL IS UNKNOWN, LIME SHALL BE INCORPORATED INTO THE TOP 4 INCHES OF SOIL AT A RATE OF 1500 POUNDS EFFECTIVE NEUTRALIZING MATERIAL (ENM) PER ACRES. SOILS WITH A pH OF SIX OR HIGHER NEED NOT BE LIMED.

FERTILIZER REQUIREMENTS

PERMANENT SEEDING: FERTILIZER SHOULD BE APPLIED BASED ON SOIL TESTS. WHEN THESE ARE NOT POSSIBLE A 13-13-13 GRADE FERTILIZER SHALL BE INCORPORATED INTO THE TOP 4 INCHES OF SOIL AT THE RATE OF 500 POUNDS PER ACRE.
TEMPORARY SEEDING: FERTILIZER SHOULD BE APPLIED BASED ON SOIL TESTS. WHEN THESE ARE NOT POSSIBLE, A 10-10-10 GRADE FERTILIZER SHALL BE INCORPORATED INTO THE TOP 4 INCHES OF SOIL AT THE RATE OF 200 POUNDS PER ACRE.

SEED REQUIREMENTS

PERMANENT SEEDING: SEED MIX SHALL CONSIST OF NINETY PERCENT (90%) TALL FESCUE AND TEN PERCENT (10%) ANNUAL RYEGRASS. SEED MIXTURE SHALL BE APPLIED AT A RATE OF 400 POUNDS PER ACRE
TEMPORARY SEEDING: SEED MIX SHALL CONSIST OF ANY COMBINATION OF TALL FESCUE, ANNUAL RYEGRASS, SUDAN, MILLET, WHEAT OR OATS. SEED MIXTURE SHALL BE APPLIED AT A RATE OF 200 POUNDS PER ACRE.
DORMANT SEASON SEEDING: SEED MIX SHALL CONSIST OF 80 PERCENT (80%) TALL FESCUE, TEN PERCENT (10%) ANNUAL RYEGRASS AND TEN PERCENT (10%) SPRING OATS. SEED MIXTURE SHALL BE APPLIED AT A RATE OF 600 POUNDS PER ACRE.

MULCH REQUIREMENTS

PERMANENT AND TEMPORARY SEEDING: WHERE SLOPES ARE LESS THAN 25 PERCENT (4:1) GRADE, CEREAL GRAIN MULCH IS REQUIRED AT THE RATE OF 100 POUNDS PER 1,000 SQUARE FEET (4,500 LBS/ACRE). CEREAL GRAIN MULCH SHALL MEET THE REQUIREMENTS OF SECTION 602 OF THE MISSOURI STATE SPECIFICATIONS FOR HIGHWAY CONSTRUCTION FOR TYPE I MULCH. WHERE SLOPES ARE 25 PERCENT (4:1) OR GREATER GRADE, TYPE 3 MULCH (HYDROMULCH) MEETING THE REQUIREMENTS OF SECTION 602 OF THE STATE SPECIFICATIONS SHALL BE USED. TYPE 3 MULCH SHALL BE APPLIED AT A MINIMUM RATE OF 2,000 LBS/ACRE.

DATES FOR SEEDING

PERMANENT SEEDING: MARCH 1 TO JUNE 1 AND AUGUST 15 TO NOVEMBER 1
TEMPORARY SEEDING: CAN OCCUR DURING ANY SEASON, HOWEVER WINTER IS THE LEAST TOLERANT.
DORMANT SEASON SEEDING: DECEMBER 15 TO FEBRUARY 29

HYDROSEEDING

TO SELECT APPROPRIATE HYDROSEEDING MIXTURES, AN EVALUATION OF SITE CONDITIONS SHALL BE PERFORMED WITH RESPECT TO: SOIL CONDITIONS, SITE TOPOGRAPHY, SEASON AND CLIMATE, VEGETATION TYPES, MAINTENANCE REQUIREMENTS, SENSITIVE ADJACENT AREAS, WATER AVAILABILITY, AND PLANS FOR PERMANENT VEGETATION. HYDROSEEDING CAN BE ACCOMPLISHED USING A MULTIPLE-STEP OR ONE-STEP PROCESS. THE MULTIPLE-STEP PROCESS ENSURES MAXIMUM DIRECT CONTACT OF THE SEEDS TO SOIL. WHEN THE ONE-STEP PROCESS IS USED TO APPLY THE MIXTURE OF SEED, FIBER, ETC., THE SEED RATE SHALL BE INCREASED TO COMPENSATE FOR ALL SEEDS NOT HAVING DIRECT CONTACT WITH THE SOIL. FOLLOW-UP APPLICATIONS SHALL BE MADE AS NEEDED TO COVER WEAK SPOTS.

STATE OF MISSOURI
MICHAEL L. KEHOE,
GOVERNOR

STATE OF MISSOURI
AARON T. HARGRAVE
NUMBER
PE-2007020274
PROFESSIONAL ENGINEER
06-11-25

OWN
Engineering beyond.™

3213 S. West Bypass
Springfield, MO 65807
417.866.2741
weareown.com

FORMERLY ANDERSON ENGINEERING

OFFICE OF
ADMINISTRATION
DIVISION OF FACILITIES
MANAGEMENT, DESIGN
AND CONSTRUCTION

DEPT. OF PUBLIC SAFETY
MISSOURI NATIONAL GUARD
DEPT. OF ADJUTANT GENERAL

CONSTRUCT NEW
44 SOLDIER BARRACKS
BUILDING 757

CAMP CROWDER
TRAINING SITE
890 RAY A CARVER DRIVE
NEOSHO, MISSOURI

PROJECT # T2234-01
SITE # 6260
ASSET # 8136260012

REVISION:
DATE:
REVISION:
DATE:
REVISION:
DATE:
ISSUE DATE: 06/11/2025

CAD DWG FILE: 6260-8136260012-C-502
DRAWN BY: ATH
CHECKED BY: ATH
DESIGNED BY: ATH

SHEET TITLE:
MISCELLANEOUS
SITE DETAILS

SHEET NUMBER:
C-501

JUNE 30, 2023

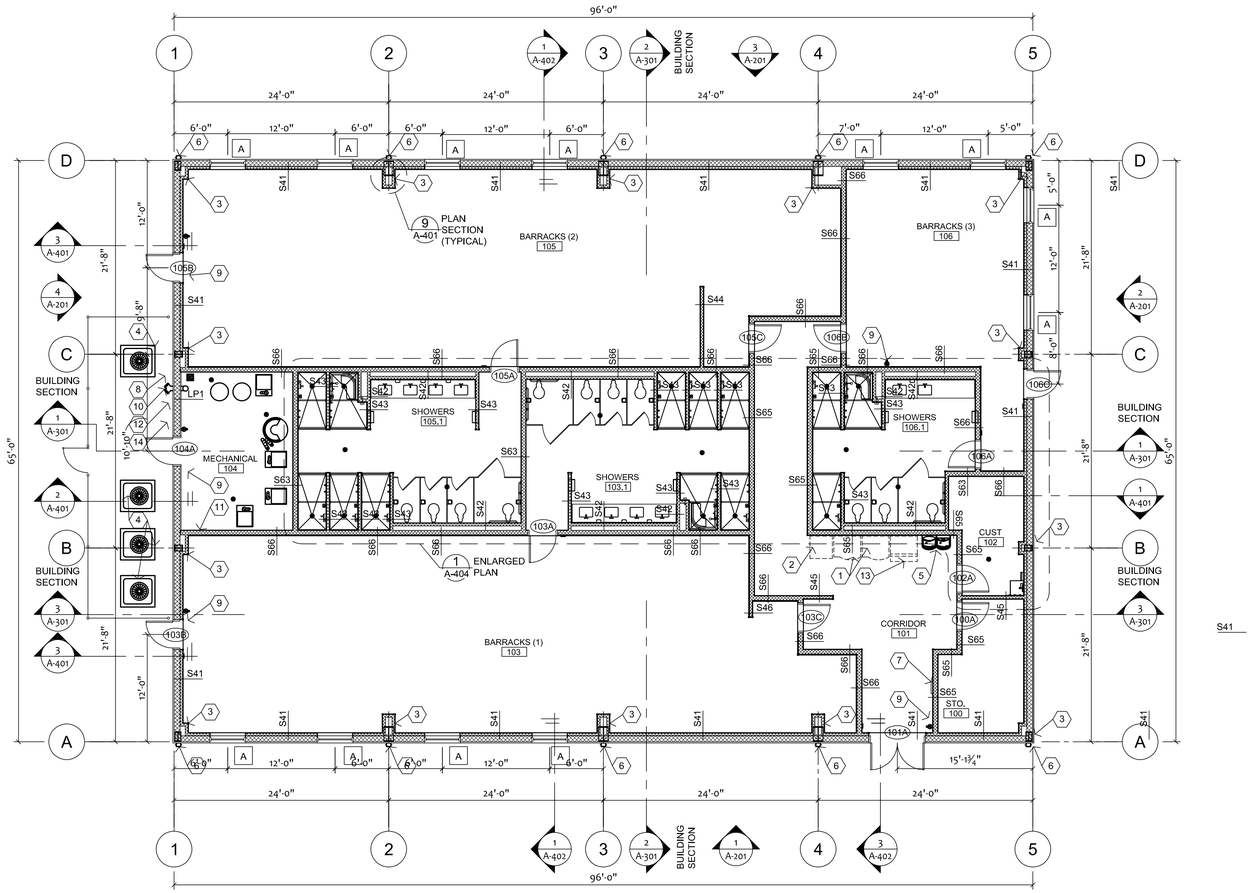

1 A-101 FLOOR PLAN
1/8" = 1'-0"

SYMBOLS LEGEND

101	DOOR MARK, REFER TO DOOR SCHEDULE,
2	KEY NOTE, REFER TO KEY NOTES
A	WINDOW MARK, REFER TO WINDOW SCHEDULE
BARRACKS (3) 107	ROOM MARK
SXX	WALL TYPE, REFER TO WALL TYPES
— — —	AREA OF ALTERNATE NO. 1

WALL TYPES

NOTE:
REFER TO INTERIOR WALL AND CEILING GENERAL NOTES FOR ADDITIONAL REQUIREMENTS.

S41
COLD FORM METAL FRAMING WALL:
-362S162-33 (3 5/8"-20 GA.) COLD FORM METAL STUD FRAMING AT 24" O.C.
-ONE LAYER 5/8" TYPE "X" GYPSUM BOARD ON EXPOSED SIDE.
-EXTEND ASSEMBLY TO 10'-6" ABOVE FINISH FLOOR.

S42
COLD FORM METAL FRAMING WALL:
-362S162-33 (3 5/8"-20 GA.) COLD FORM METAL STUD FRAMING AT 24" O.C. AND 16" O.C. AT CEMENT BACKING BOARD LOCATIONS.
-ONE LAYER 5/8" TYPE "X" GYPSUM BOARD ON EXPOSED SIDE. (PROVIDE 5/8" CEMENT BACKING BOARD AT SHOWER ENCLOSURE SURFACES IN LIEU OF GYPSUM BOARD).
-EXTEND ASSEMBLY TO 8'-6" ABOVE FINISH FLOOR.

S43
COLD FORM METAL FRAMING WALL:
-362S162-33 (3 5/8"-20 GA.) COLD FORM METAL STUD FRAMING AT 24" O.C. AND 16" O.C. AT CEMENT BACKING BOARD LOCATIONS.
-ONE LAYER 5/8" TYPE "X" GYPSUM BOARD ON BOTH SIDES. (PROVIDE 5/8" CEMENT BACKING BOARD AT SHOWER ENCLOSURE SURFACES IN LIEU OF GYPSUM BOARD).
-EXTEND ASSEMBLY TO 8'-6" ABOVE FINISH FLOOR.

S44
COLD FORM METAL FRAMING WALL:
-362S162-33 (3 5/8"-20 GA.) COLD FORM METAL STUD FRAMING AT 24" O.C.
-ONE LAYER 5/8" TYPE "X" GYPSUM BOARD ON BOTH SIDES
-EXTEND ASSEMBLY TO 10'-6" ABOVE FINISH FLOOR.

S45
COLD FORM METAL FRAMING WALL:
-362S162-33 (3 5/8"-20 GA.) COLD FORM METAL STUD FRAMING AT 24" O.C.
-ONE LAYER 5/8" TYPE "X" GYPSUM BOARD ON BOTH SIDES
-EXTEND ASSEMBLY TO 9'-6" ABOVE FINISH FLOOR.

S46
COLD FORM METAL FRAMING WALL:
-362S162-33 (3 5/8"-20 GA.) COLD FORM METAL STUD FRAMING AT 24" O.C.
-50F125-18 (1/2"-25 GA.) COLD FORM RESILIENT CHANNELS HORIZONTAL AT 24" O.C. ON ONE SIDE WITH OUTSIDE LEG UP.
-ONE LAYER 5/8" TYPE "X" GYPSUM BOARD ON BOTH SIDES
-EXTEND ASSEMBLY TO 10'-6" ABOVE FINISH FLOOR.

S61
COLD FORM METAL FRAMING WALL:
-600S162-33 (6"-20 GA.) COLD FORM METAL STUD FRAMING AT 24" O.C.
-6" UNFACED SOUND ATTENUATION BATT INSULATION IN CAVITY.
-ONE LAYER 5/8" TYPE "X" GYPSUM BOARD ON EXPOSED SIDE.
-EXTEND ASSEMBLY TO 8'-6" ABOVE FINISH FLOOR.

S62
COLD FORM METAL FRAMING WALL:
-600S162-33 (6"-20 GA.) COLD FORM METAL STUD FRAMING AT 24" O.C.
-ONE LAYER 5/8" TYPE "X" GYPSUM BOARD ON EXPOSED SIDE.
-EXTEND ASSEMBLY TO 8'-6" ABOVE FINISH FLOOR.

S63
COLD FORM METAL FRAMING WALL:
-600S162-33 (6"-20 GA.) COLD FORM METAL STUD FRAMING AT 24" O.C. AND 16" O.C. AT CEMENT BACKING BOARD LOCATIONS)
-6" UNFACED SOUND ATTENUATION BATT INSULATION IN CAVITY.
-ONE LAYER 5/8" TYPE "X" GYPSUM BOARD ON BOTH SIDES. (PROVIDE 5/8" CEMENT BACKING BOARD AT SHOWER ENCLOSURE SURFACES IN LIEU OF GYPSUM BOARD)
-EXTEND ASSEMBLY TO 8'-6" ABOVE FINISH FLOOR.

S64
COLD FORM METAL FRAMING WALL:
-600S162-33 (6"-20 GA.) COLD FORM METAL STUD FRAMING AT 24" O.C. AND 16" O.C. AT CEMENT BACKING BOARD LOCATIONS.
-ONE LAYER 5/8" TYPE "X" GYPSUM BOARD ON BOTH SIDES. (PROVIDE 5/8" CEMENT BACKING BOARD AT SHOWER ENCLOSURE SURFACES IN LIEU OF GYPSUM BOARD)
-EXTEND ASSEMBLY TO BOTTOM OF ROOF DECK.
-(1) HOUR FIRE RATED PARTITION EQUAL TO UL DESIGN NO. U419 ASSEMBLY.

S65
COLD FORM METAL FRAMING WALL:
-600S162-33 (6"-20 GA.) COLD FORM METAL STUD FRAMING AT 24" O.C. AND 16" O.C. AT CEMENT BACKING BOARD LOCATIONS)
-6" UNFACED SOUND ATTENUATION BATT INSULATION IN CAVITY.
-ONE LAYER 5/8" TYPE "X" GYPSUM BOARD ON BOTH SIDES. (PROVIDE 5/8" CEMENT BACKING BOARD AT SHOWER ENCLOSURE SURFACES IN LIEU OF GYPSUM BOARD)
-EXTEND ASSEMBLY TO BOTTOM OF ROOF DECK.
-(1) HOUR FIRE RATED PARTITION EQUAL TO UL DESIGN NO. U419 ASSEMBLY.

S66
COLD FORM METAL FRAMING WALL:
-600S162-33 (6"-20 GA.) COLD FORM METAL STUD FRAMING AT 24" O.C. AND 16" O.C. AT CEMENT BACKING BOARD LOCATIONS.
-50F125-18 (1/2"-25 GA.) COLD FORM RESILIENT CHANNELS HORIZONTAL AT 24" O.C. ON ONE SIDE WITH OUTSIDE LEG UP.
-6" UNFACED SOUND ATTENUATION BATT INSULATION IN CAVITY.
-ONE LAYER 5/8" TYPE "X" GYPSUM BOARD ON BOTH SIDES. (PROVIDE 5/8" CEMENT BACKING BOARD AT SHOWER ENCLOSURE SURFACES IN LIEU OF GYPSUM BOARD)
-EXTEND ASSEMBLY TO BOTTOM OF ROOF DECK.
-(1) HOUR FIRE RATED PARTITION EQUAL TO UL DESIGN NO. U419 ASSEMBLY.
-SOUND TRANSMISSION RATING STC 50 MINIMUM.

LP1
PRE-ENGINEERED METAL BUILDING WALL:
-PRE-ENGINEERED METAL BUILDING EXTERIOR WALL SYSTEM (REFER TO WALL SECTIONS).
-PRE-ENGINEERED METAL BUILDING INTERIOR SHEET METAL (28 GA.) LINER PANEL SYSTEM TO 7'-4" ABOVE FINISH FLOOR.

GENERAL NOTES

(A) REFER TO PROJECT MANUAL FOR ADDITIONAL REQUIREMENTS.

(B) DIMENSION ARE TO ROUGH FACE OF FOUNDATION, PRE-ENGINEERED METAL BUILDING GIRTS, COLD-FORM METAL FRAMING, OR CENTERLINE OF STRUCTURE, UNLESS OTHERWISE INDICATED. NOTE INTERIOR 3 5/8" COLD-FORM METAL STUD WALL DIMENSIONS NOT SHOWN FOR CLARITY.

(C) REFER TO SCOPE OF WORK SCHEDULE FOR ADDITIONAL REQUIREMENTS. OWNER'S FURNISHED AND INSTALLED FURNITURE AND EQUIPMENT SHOW FOR REFERENCE ONLY (N.I.C.).

(D) REFER TO CODE ANALYSIS DRAWING FOR ADDITIONAL REQUIREMENTS.

(E) REFER TO DRAWING A-601 FOR DOOR AND WINDOW SCHEDULES.

(F) REFER TO EXTERIOR AND INTERIOR FINISH SCHEDULES FOR ADDITIONAL REQUIREMENTS.

(G) REFER TO PRE-ENGINEERED METAL BUILDING SUBMITTALS FOR ADDITIONAL REQUIREMENTS. EXTERIOR WALL GIRTS TO BE 8" WIDE MAXIMUM.

KEY NOTES

1. VENDING MACHINE LOCATION (BY OTHERS).
2. DEDICATED RECYCLING CONTAINER (BY OTHERS).
3. PRE-ENGINEERED METAL BUILDING STEEL COLUMN. PROVIDE WALL TYPE "S41" UNLESS OTHERWISE NOTED, AND HOLD FRAMING AS CLOSE AS POSSIBLE. REFER TO PLAN SECTION 9/A-401 (TYPICAL).
4. CONDENSING UNIT, REFER TO MECHANICAL DRAWINGS.
5. DRINKING FOUNTAIN, REFER TO PLUMBING DRAWINGS.
6. PRE-ENGINEERED METAL BUILDING DOWNSPOUT SYSTEM, REFER TO ROOF PLAN AND CIVIL DRAWINGS FOR ADDITIONAL REQUIREMENTS.
7. FIRE ALARM SYSTEM CONTROL PANEL, REFER TO ELECTRICAL DRAWINGS.
8. GAS SERVICE ENTRANCE - REFER TO UTILITY AND PLUMBING DRAWINGS.
9. SURFACE MOUNTED FIRE EXTINGUISHER. FIRE EXTINGUISHERS SHALL BE UL LISTED ABC TYPE, MULTIPURPOSE DRY CHEMICAL, 10 LBS. MINIMUM CAPACITY, REFER TO DETAIL 3/A-501 FOR TYPICAL MOUNTING REQUIREMENTS.
10. FIRE DEPARTMENT CONNECTION (FDC), REFER TO PLUMBING DRAWINGS FOR ADDITIONAL INFORMATION.
11. 8'-0" x 4'-0" x 3/4" FIRE TREATED PLYWOOD TELEPHONE BOARD MECHANICALLY ATTACHED TO WALL. COORDINATE WITH TELECOMMUNICATION AND DATA CONTRACTOR, REFER TO ELECTRICAL DRAWINGS.
12. HOSE BIB, REFER TO PLUMBING DRAWINGS.
13. FUTURE ICE MACHINE (BY OTHERS).
14. ELECTRICAL METER, REFER TO ELECTRICAL DRAWINGS.

INTERIOR WALL & CEILING NOTES

1. GENERAL:
A. REFER TO CODE SUMMARY DRAWINGS FOR ADDITIONAL INFORMATION ON LOCATIONS OF FIRE RATED ASSEMBLIES. EXTEND ASSEMBLIES TO INSIDE FACE OF EXTERIOR WALL OR ROOF PANELS.

B. REFER TO INTERIOR FINISH PLANS AND SCHEDULES FOR ADDITIONAL WALL FINISH MATERIAL APPLICATIONS.

2. FRAMING:
A. REFER TO STRUCTURAL DRAWINGS FOR ADDITIONAL COLD FORM METAL FRAMING REQUIREMENTS.

B. WHERE FRAMING DOES NOT EXTEND TO BOTTOM OF DECK OR STRUCTURE, PROVIDE LATERALLY BRACE TOP OF PARTITION WALL FRAMING WITH STUDS AT 4'-0" O.C. ALTERNATING DIAGONALLY EXTENDING TO STRUCTURAL FRAMING ABOVE.

C. WHERE WALL FRAMING EXTENDS TO BOTTOM OF ROOF DECK OR STRUCTURE, PROVIDE DEFLECTION CHANNELS AT TOP TRACK FOR 2" MAXIMUM DEFLECTION.

D. PROVIDE FIRE TREATED 2X BLOCKING AS REQUIRED FOR INSTALLATION OF ACCESSORIES, PER MANUFACTURER'S RECOMMENDATIONS.

E. REFER TO OPENING HEAD, JAMB AND SILL DETAILS FOR ADDITIONAL FRAMING REQUIREMENTS.

F. PROVIDE HORIZONTAL STUD BRIDGING AT 4'-0" O.C. VERTICAL.

G. WHERE INDICATED, INSTALL RESILIENT CHANNELS WITH MOUNTING LEG TURNED DOWN, EXCEPT AT FLOOR OR PERIMETER CONDITIONS.

3. GYPSUM AND BACKING BOARD:
A. EXPANSION/CONTROL JOINTS: INSTALL EXPANSION/CONTROL JOINTS IN CEILINGS EXCEEDING 2500 SQ. FT. IN AREA AND IN PARTITION WALL LENGTHS EXCEEDING 30 FEET. DO NOT EXCEED A DISTANCE OF 50 FEET IN ANY DIRECTION BETWEEN CEILING JOINTS. INSTALL CONTROL JOINTS WHERE FRAMING OR FURRING CHANGES DIRECTION.

B. PROVIDE "J" MOLDING OR CORNER BEAD AT ALL DISSIMILAR WALL MATERIAL TRANSITIONS.

C. PROVIDE CEMENT BACKING BOARD AT WALL TILE FINISH LOCATIONS. SET BOTTOM FRAMING TRACK IN SOLID BED OF MASTIC. PROVIDE WATERPROOFING MEMBRANE OVER CEMENT BACKER BOARD..

D. PROVIDE MOISTURE RESISTANT TYPE "X" GYPSUM BOARD AT WET WALL AND CEILING LOCATIONS (SHOWERS AND JANITORS SINK AREAS).

4. INSULATION:
A. INSULATION SHALL HAVE A FLAME SPREAD RATING OF 0-25 AND A SMOKE DEVELOPMENT RATING OF 0 - 450.

B. PROVIDE SEALANT AND/OR FOAM IN PLACE ACOUSTICAL INSULATION ON BOTH SIDES OF FRAMING PERIMETER (TOP, BOTTOM, ENDS) OF ACOUSTICAL INSULATED INTERIOR WALLS.

5. FIRE STOPPING:
A. PROVIDE FIRE STOPPING AND FIRE SEALANT MATERIALS AS REQUIRED AT ALL FIRE RATED ASSEMBLY TRANSITIONS AND PENETRATIONS. RATING TO BE EQUAL TO RATED ASSEMBLY.

STATE OF MISSOURI
MICHAEL L. KEHOE,
GOVERNOR

DAVID MICHAEL FROHLING
NUMBER A-2010011354
ARCHITECT
2025 06 11
David Michael Frohling
A-2010011354

GASKIN HILL NORCROSS OF MISSOURI, INC.
300 South Jefferson Avenue, Suite 301, Springfield, MO 65806
417.869.0719
www.ghnae.com

OFFICE OF ADMINISTRATION
DIVISION OF FACILITIES MANAGEMENT, DESIGN AND CONSTRUCTION

DEPT. OF PUBLIC SAFETY
MISSOURI NATIONAL GUARD
DEPT. OF ADJUTANT GENERAL

CONSTRUCT NEW
44 SOLDIER BARRACKS
BUILDING 757

CAMP CROWDER
TRAINING SITE
890 RAY A CARVER DRIVE
NEOSHO, MISSOURI

PROJECT # T2234-01
SITE # 6260
ASSET # 8136260012

REVISION:
DATE:
REVISION:
DATE:
REVISION:
DATE:
ISSUE DATE: 06/11/2025

CAD DWG FILE: T2234-01-6260-8136260012-A-101
DRAWN BY: DMF
CHECKED BY: XXX
DESIGNED BY: DMF

SHEET TITLE:
FLOOR PLAN

SHEET NUMBER:
A-101

JUNE 11, 2025

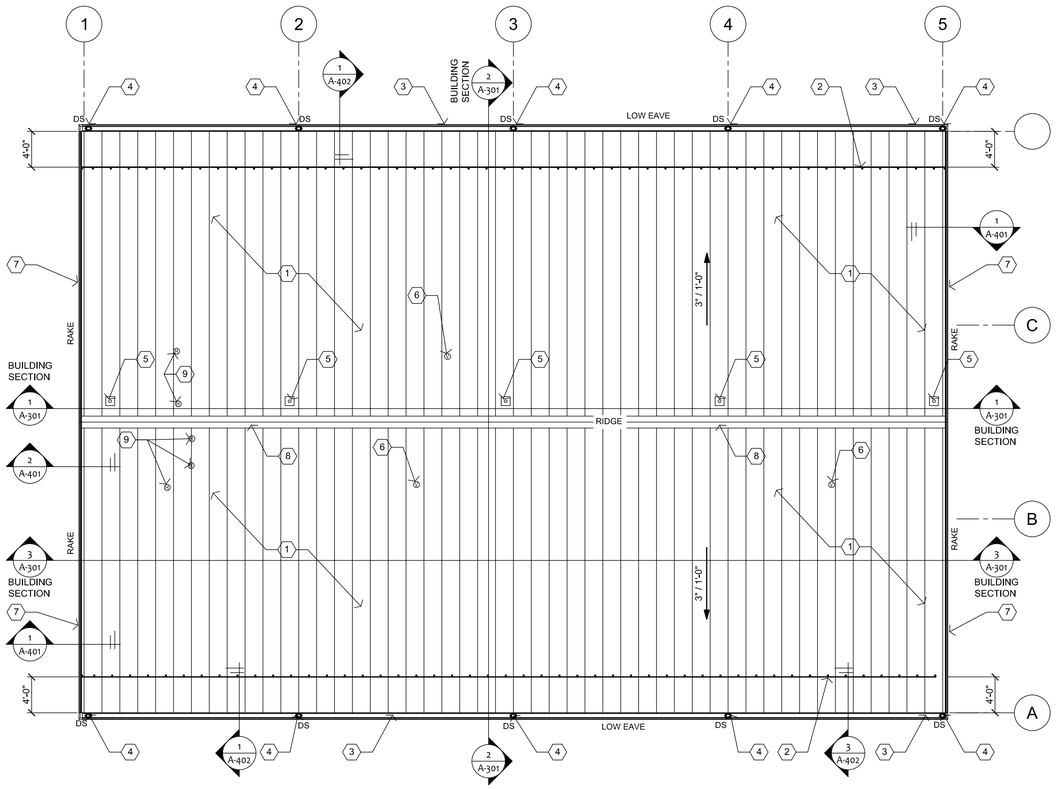

1 A-102 ROOF PLAN
1/8" = 1'-0"

NORTH

KEY NOTES

1. PRE- ENGINEERED METAL BUILDING SHEET METAL STANDING SEAM (STRUCTURAL TRAPEZOIDAL PROFILE) ROOFING PANEL SYSTEM OVER THERMAL BLOCKS (R-5).
2. SNOW GUARD SYSTEM (EXTEND FULL LENGTH OF ROOF) ATTACHED WITH ALUMINUM S-5 CLAMPS.
3. PRE-ENGINEERED METAL BUILDING SHEET METAL GUTTER (TYPICAL). REFER TO DETAIL 2/A-102. SIZES BY P.E.M.B. MANUFACTURER.
4. PRE-ENGINEERED METAL BUILDING SHEET METAL DOWNSPOUT (DS) SYSTEM. SIZES BY P.E.M.B. MANUFACTURER.
5. FALL PROTECTION ANCHOR SYSTEM ATTACHED WITH ALUMINUM S-5 CLAMPS. INSTALL 2'-0" MIN FROM EDGE OF ROOF, CENTER BETWEEN METAL ROOF PANEL SEAMS AND SPACE EQUALLY. COORDINATE WITH PRE-ENGINEERED METAL ROOF SYSTEM MANUFACTURER FOR INSTALLATION.
6. PLUMBING VENT THRU ROOF (VTR). REFER TO 5/A-102 AND PLUMBING DRAWINGS FOR SIZES. CENTER BETWEEN ROOF PANEL SEAMS.
7. PRE-ENGINEERED METAL BUILDING SHEET METAL RAKE EDGE FLASHING. REFER TO DETAIL 3/A-102.
8. PRE-ENGINEERED METAL BUILDING SHEET METAL RIDGE CAP FLASHING - FIXED AT RIDGE. REFER TO DETAIL 4/A-102.
9. MECHANICAL SYSTEM HOT VENT FLUE. REFER TO DETAIL 1/A-501 AND MECHANICAL DRAWINGS FOR TYPES AND SIZES.

GENERAL NOTES

A. REFER TO PROJECT MANUAL FOR ADDITIONAL REQUIREMENTS.

B. REFER TO PRE-ENGINEERED METAL BUILDING SUBMITTALS FOR ADDITIONAL REQUIREMENTS.

C. REFER TO PLUMBING, MECHANICAL, AND ELECTRICAL DRAWINGS FOR ALL ROOF-MOUNTED EQUIPMENT SIZES AND TYPES, INCLUDING VENT PIPES, FLUES, AND EXHAUST, ALL PIPE FLASHING PENETRATIONS THROUGH ROOF SHALL BE TYPE APPROVED BY PRE-ENGINEERED METAL BUILDING MANUFACTURER WITH SHEET METAL FINISHES TO MATCH ROOF PANEL. PENETRATIONS WITH DIAMETER LESS THAN SPACING OF ROOF PANEL RIBS SHALL PENETRATE IN THE CENTER OF THE ROOF PANEL.

D. ALL SUPPORTS FOR EXPOSED ROOF MOUNTED PIPING, CONDUIT, FALL PROTECTION DEVICES, SNOW GUARDS, ETC. TO BE MOUNTED ON PRE-MANUFACTURED ALUMINUM S-5 CLAMPS ATTACHED TO TOP OF PRE-ENGINEERED METAL BUILDING ROOF SEAMS. ALL FRAMING, SUPPORTS, AND FASTENERS SHALL BE NON-CORROSIVE MATERIAL TYPES. EXPOSED FINISHES TO MATCH ROOF COLOR, UNLESS OTHERWISE INDICATED.

F. ALL ROOF PENETRATIONS TO BE 3'-6" MINIMUM FROM ROOF EDGE PERIMETERS.

G. SHEET METAL CONSTRUCTION SHALL COMPLY WITH SHEET METAL AND AIR CONDITIONING CONTRACTORS NATIONAL ASSOCIATION (SMACNA) DESIGN STANDARDS AND RECOMMENDATIONS.

H. ROOFING CONSTRUCTION SHALL COMPLY WITH NATIONAL ROOFING CONTRACTORS ASSOCIATION (NRCA) DESIGN STANDARDS AND RECOMMENDATIONS.

I. REFER TO EXTERIOR FINISH SCHEDULE FOR ADDITIONAL REQUIREMENTS.

SYMBOLS LEGEND

- GAS — EXPOSED ROOF TOP MECHANICAL GAS PIPING WITH FLOATING SUPPORTS
- HW — EXPOSED ROOF TOP MECHANICAL CONDENSATE PIPING WITH SUPPORTS
- V — VENT THROUGH ROOF
- H — HOT VENT
- E — MECHANICAL EXHAUST UNIT
- MAU# — ROOF TOP UNIT WITH CRICKET
- FALL PROTECTION SYSTEM
- SNOW GUARD SYSTEM
- DS — LOCATION OF DOWNSPOUTS

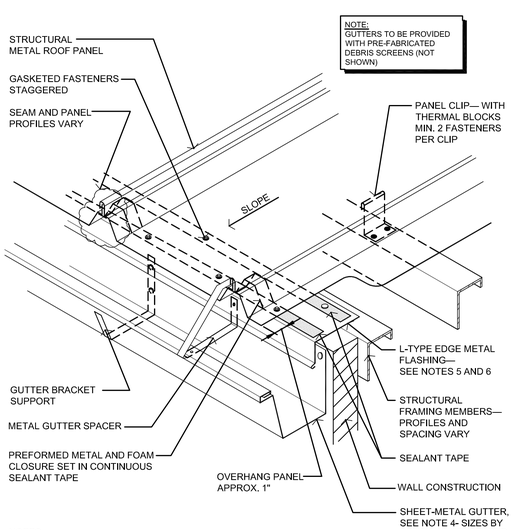

NOTES:

1. SPECIFIC FASTENING AND STRUCTURAL REQUIREMENTS ARE NOT INDICATED AS THEY VARY FROM SYSTEM TO SYSTEM DEPENDING ON PANEL MANUFACTURER'S REQUIREMENTS, WIND ZONE, BUILDING CODE AND WALL CONSTRUCTION.
2. INSULATION, VAPOR RETARDER AND THERMAL BLOCKS FOR ROOF SYSTEM ARE NOT SHOWN FOR CLARITY.
3. REFER TO THE ARCHITECTURAL METAL FLASHING SECTION OF THE NRCA ROOFING MANUAL; ARCHITECTURAL METAL FLASHING, CONDENSATION CONTROL AND REROOFING FOR MORE INFORMATION ON GUTTERS.
4. REFER TO THE ARCHITECTURAL METAL FLASHING SECTION OF THE NRCA ROOFING MANUAL; ARCHITECTURAL METAL FLASHING, CONDENSATION CONTROL AND REROOFING FOR PERIMETER EDGE-METAL THICKNESS AND CLEAT RECOMMENDATIONS.
5. REFER TO THE NRCA INTRODUCTION IN CHAPTER 10—CONSTRUCTION DETAILS FOR ADDITIONAL INFORMATION.

EAVE FLASHING WITH GUTTER—FIXED AT EAVE

2 A-102 DETAIL
NOT TO SCALE

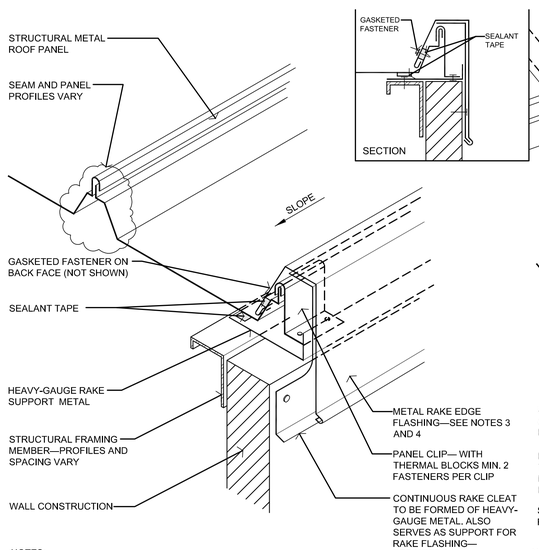

NOTES:

1. SPECIFIC FASTENING AND STRUCTURAL REQUIREMENTS ARE NOT INDICATED AS THEY VARY FROM SYSTEM TO SYSTEM DEPENDING ON PANEL MANUFACTURER'S REQUIREMENTS, WIND ZONE, BUILDING CODE AND WALL CONSTRUCTION.
2. INSULATION, VAPOR RETARDER AND THERMAL BLOCKS FOR ROOF SYSTEM ARE NOT SHOWN FOR CLARITY.
3. REFER TO THE ARCHITECTURAL METAL FLASHING SECTION OF THE NRCA ROOFING MANUAL; ARCHITECTURAL METAL FLASHING, CONDENSATION CONTROL AND REROOFING FOR PERIMETER EDGE-METAL THICKNESS AND CLEAT RECOMMENDATIONS.
4. REFER TO THE NRCA INTRODUCTION IN CHAPTER 10—CONSTRUCTION DETAILS FOR ADDITIONAL INFORMATION.

RAKE EDGE FLASHING - STARTER PANEL

3 A-102 DETAIL
NOT TO SCALE

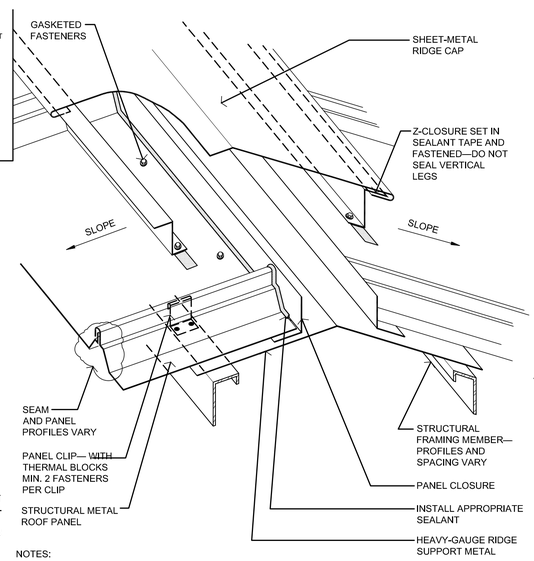

NOTES:

1. SPECIFIC FASTENING AND STRUCTURAL REQUIREMENTS ARE NOT INDICATED AS THEY VARY FROM SYSTEM TO SYSTEM DEPENDING ON PANEL MANUFACTURER'S REQUIREMENTS, WIND ZONE, BUILDING CODE AND WALL CONSTRUCTION.
2. INSULATION, VAPOR RETARDER AND THERMAL BLOCKS FOR ROOF SYSTEM ARE NOT SHOWN FOR CLARITY.
3. THIS FIXES THE PANEL ALONG THE RIDGE.
4. REFER TO THE NRCA INTRODUCTION IN CHAPTER 10—CONSTRUCTION DETAILS FOR ADDITIONAL INFORMATION.

RIDGE CAP FLASHING - FIXED AT RIDGE

4 A-102 DETAIL
NOT TO SCALE

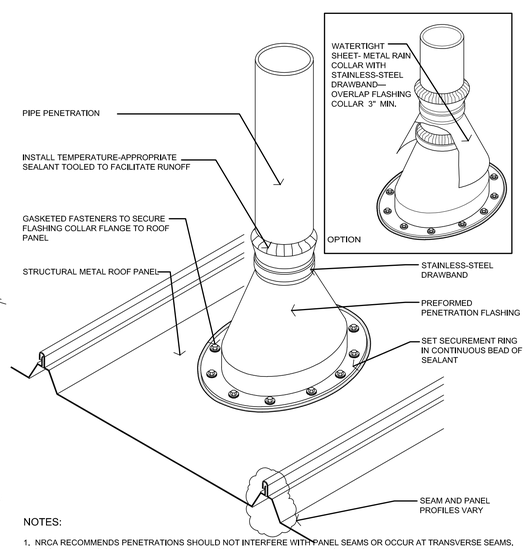

NOTES:

1. NRCA RECOMMENDS PENETRATIONS SHOULD NOT INTERFERE WITH PANEL SEAMS OR OCCUR AT TRANSVERSE SEAMS.
2. IF FIELD PANELS OVERLAP AT THE PENETRATION, ATTACHMENT OF THE DOWNSLOPE PANEL ALONG ITS UPSLOPE END MAY BE NECESSARY.
3. VENT STACKS AND OTHER PIPES SHOULD HAVE ADEQUATE CLEARANCE ON ALL SIDES FROM WALLS AND OTHER PROJECTIONS TO FACILITATE PROPER FLASHING AND PANEL DRAINAGE.
4. FOR HOT PIPES, SPECIFIC HIGH-TEMPERATURE BOOTS SHOULD BE USED.
5. INSULATION, VAPOR RETARDER AND THERMAL BLOCKS FOR ROOF SYSTEM ARE NOT SHOWN FOR CLARITY.
6. REFER TO THE NRCA INTRODUCTION IN CHAPTER 10—CONSTRUCTION DETAILS FOR ADDITIONAL INFORMATION.

PIPE PENETRATION FLASHING

5 A-102 DETAIL
NOT TO SCALE

STATE OF MISSOURI
MICHAEL L. KEHOE,
GOVERNOR

MISSOURI
DAVID MICHAEL FROHLING
NUMBER A-2010011354
ARCHITECT
2025 06 11

David Michael Frohling
A-2010011354

GASKIN HILL NORCROSS OF MISSOURI, INC.
300 South Jefferson Avenue, Suite 301, Springfield, MO 65806
417.869.0719
www.ghnae.com

OFFICE OF ADMINISTRATION
DIVISION OF FACILITIES MANAGEMENT, DESIGN AND CONSTRUCTION

DEPT. OF PUBLIC SAFETY
MISSOURI NATIONAL GUARD
DEPT. OF ADJUTANT GENERAL

CONSTRUCT NEW
44 SOLDIER BARRACKS
BUILDING 757

CAMP CROWDER
TRAINING SITE
890 RAY A CARVER DRIVE
NEOSHO, MISSOURI

PROJECT # T2234-01
SITE # 6260
ASSET # 8136260012

REVISION:
DATE:
REVISION:
DATE:
REVISION:
DATE:
ISSUE DATE: 06/11/2025

CAD DWG FILE: T2234-01-6260-8136260012-A-102
DRAWN BY: DMF
CHECKED BY: XXX
DESIGNED BY: DMF

SHEET TITLE:
ROOF PLAN

SHEET NUMBER:
A-102

10 OF 32 SHEETS
JUNE 11, 2025

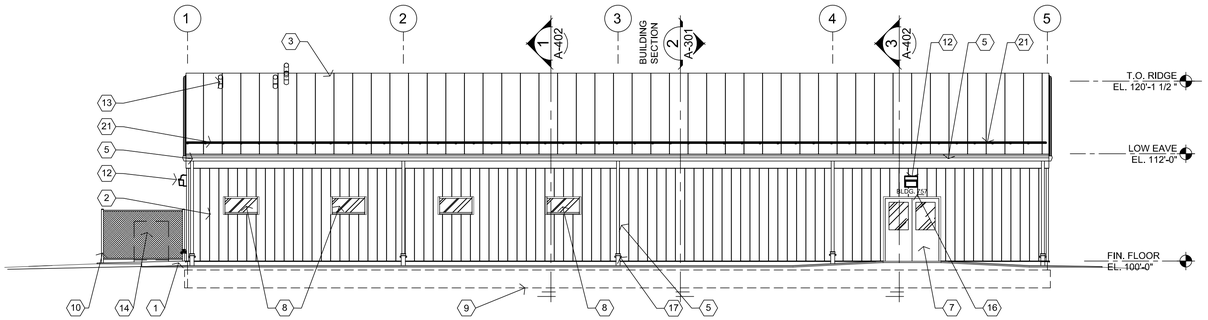

1 A-201 NORTHEAST ELEVATION
1/8" = 1'-0"

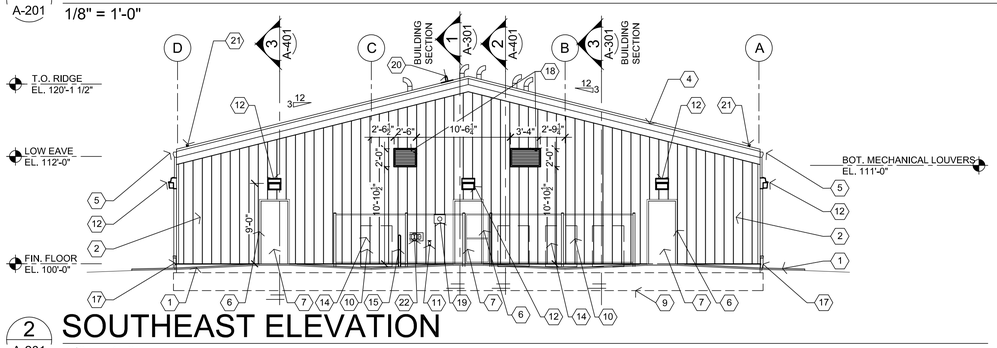

2 A-201 SOUTHEAST ELEVATION
1/8" = 1'-0"

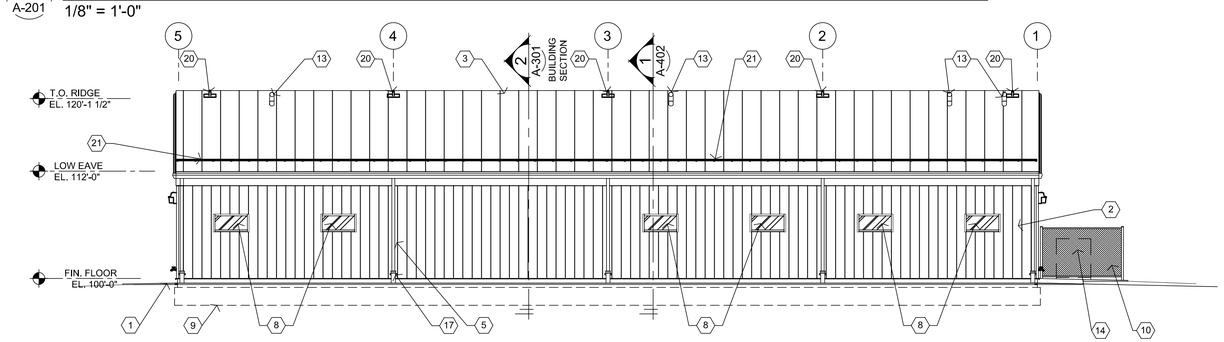

3 A-201 SOUTHWEST ELEVATION
1/8" = 1'-0"

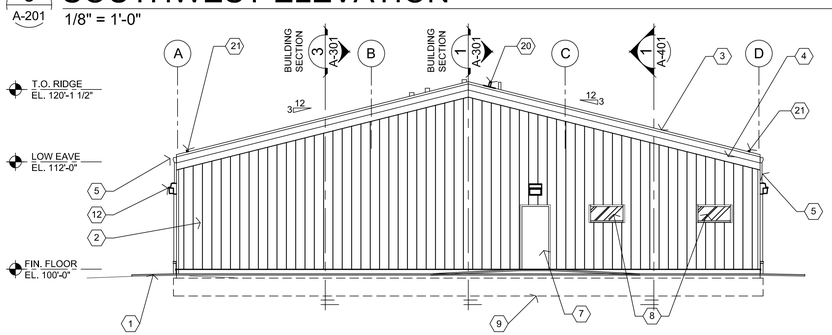

4 A-201 NORTHWEST ELEVATION
1/8" = 1'-0"

EXTERIOR FINISH SCHEDULE

PRE-ENGINEERED METAL BUILDING SYSTEMS
KEY NOTE NO. 2:
TYPE: EXTERIOR EXPOSED FASTENER WALL PANEL
MANUFACTURER: MBCI OR EQUAL (BASIS FOR DESIGN)
SERIES: PBR WALL PANEL
FINISH: PRE-FINISHED
COLOR: (MATCH EXISTING FACILITY FINISHES)

KEY NOTE NO. 3:
TYPE: STANDING SEAM, TRAPEZOIDAL RIB
MANUFACTURER: MBCI OR EQUAL (BASIS FOR DESIGN)
SERIES: ULTRA-DEK
FINISH: PRE-FINISHED
COLOR: (MATCH EXISTING FACILITY FINISHES)

KEY NOTE NO. 4:
TYPE: SHEET METAL FLASHING, FASCIA, OR TRIM
MANUFACTURER: REFER TO PROJECT MANUAL
FINISH: PRE-FINISHED
COLOR: (MATCH EXISTING FACILITY FINISHES)

KEY NOTE NO. 5:
TYPE: SHEET METAL GUTTER AND DOWNSPOUT SYSTEM
MANUFACTURER: REFER TO PROJECT MANUAL
FINISH: PRE-FINISHED
COLOR: (MATCH EXISTING FACILITY FINISHES)

KEY NOTE NO. 6:
TYPE: DOOR TRIM
MANUFACTURER: REFER TO PROJECT MANUAL
FINISH: PRE-FINISHED
COLOR: (MATCH EXISTING FACILITY FINISHES)

OPENINGS
KEY NOTE NO. 7:
TYPE: HOLLOW METAL DOORS AND FRAMES
MANUFACTURER: REFER TO PROJECT MANUAL
FINISH: FACTORY PRIMED AND FIELD PAINTED
COLOR: MATCH ADJACENT METAL PANEL FIELD COLOR

KEY NOTE NO. 8:
TYPE: ALUMINUM WINDOWS
MANUFACTURER: REFER TO PROJECT MANUAL
FINISH: TO BE SELECTED BY ARCHITECT
GLAZING: (REFER TO GLAZING SCHEDULE)

PAINTING
KEY NOTE NO. 10:
TYPE: STEEL BOLLARD (REFER TO CIVIL DRAWINGS)
FINISH: FIELD PRIMED AND PAINTED
COLOR: TO BE SELECTED BY ARCHITECT

ELECTRICAL LIGHTING
KEY NOTE NO. 12:
MFG: (REFER ELECTRICAL DRAWINGS)
FINISH: TO BE SELECTED BY ARCHITECT

MECHANICAL WALL PENETRATIONS
KEY NOTE NO. 18:
MFG: (REFER TO MECHANICAL DRAWINGS)
FINISH: TO BE SELECTED BY ARCHITECT

GENERAL NOTES

(A) REFER TO PROJECT MANUAL FOR ADDITIONAL REQUIREMENTS.

(B) REFER TO PRE-ENGINEERED METAL BUILDING SUBMITTALS FOR ADDITIONAL REQUIREMENTS.

(C) FOR DOOR AND WINDOW TYPES, REFER TO FLOOR PLANS AND SCHEDULES.

(D) REFER TO EXTERIOR FINISH SCHEDULE FOR ADDITIONAL REQUIREMENTS FINAL MATERIAL COLORS, PATTERNS AND FINISHES TO BE SELECTED FROM MANUFACTURER'S FULL RANGE OF CUSTOM COLORS.

(E) REFER TO CIVIL DRAWINGS FOR ADJACENT SITE DEVELOPMENT CONSTRUCTION.

(F) REFER TO PLUMBING, MECHANICAL AND ELECTRICAL DRAWINGS FOR SYSTEM TYPES.

(G) REFER TO WALL SECTIONS AND DETAILS FOR ADDITIONAL REQUIREMENTS.

(H) PAINT ALL EXPOSED METAL SURFACES TO MATCH ADJACENT MATERIAL COLORS, UNLESS OTHERWISE INDICATED.

KEY NOTES

(1) CAST IN PLACE CONCRETE SLABS OR SIDEWALKS, REFER TO CIVIL DRAWINGS.

(2) PRE-ENGINEERED METAL BUILDING EXTERIOR WALL PANEL SYSTEM.

(3) PRE-ENGINEERED BUILDING SHEET METAL ROOFING SYSTEM.

(4) PRE-ENGINEERED METAL BUILDINGS SHEET METAL FLASHING, FASCIA, CLOSURE, OR TRIM.

(5) PRE-ENGINEERED METAL BUILDING SHEET METAL GUTTER AND DOWNSPOUT SYSTEM. REFER TO ROOF PLAN

(6) PRE-ENGINEERED METAL BUILDING SHEET METAL OPENING TRIM.

(7) EXTERIOR DOOR AND FRAME SYSTEM, REFER TO FLOOR PLAN AND DOOR SCHEDULE FOR TYPE.

(8) EXTERIOR WINDOW SYSTEM, REFER TO FLOOR PLAN AND WINDOW SCHEDULE FOR TYPES.

(9) APPROXIMATE LINE OF FOUNDATION, REFER TO STRUCTURAL DRAWINGS.

(10) 6' CHAINLINK FENCE, REFER TO CIVIL DRAWINGS.

(11) HOSE BIB, REFER TO PLUMBING DRAWINGS.

(12) LIGHT FIXTURE (CENTER OF FIXTURE AT 9'-0" A.F.F.), REFER TO ELECTRICAL DRAWINGS.

(13) MECHANICAL/PLUMBING ROOF MOUNTED EQUIPMENT OR ROOF PENETRATIONS, REFER TO ROOF PLAN.

(14) MECHANICAL CONDENSING UNITS, REFER TO MECHANICAL DRAWINGS.

(15) GAS PIPING (NATURAL GAS) - REFER TO PLUMBING DRAWINGS.

(16) BUILDING ADDRESS IDENTIFICATION NUMBER "BUILDING 757" SIGN IN 6" HIGH HELVETICA BOLD CHARACTERS ATTACHED TO THE BUILDING.

(17) DOWNSPOUT COLLECTION SYSTEM, REFER TO CIVIL DRAWINGS.

(18) MECHANICAL WALL PENETRATION, REFER TO MECHANICAL DRAWINGS. PROVIDE FRAMING, FLASHING, ANCHORS AND SEALANT AS REQUIRED FOR COMPLETE INSTALLATION.

(19) ELECTRICAL METER, REFER TO ELECTRICAL DRAWINGS.

(20) FALL PROTECTION ANCHORS. REFER TO ROOF PLAN.

(21) CONTINUOUS ICE GUARD, REFER TO PROJECT MANUAL.

(22) FIRE DEPARTMENT CONNECTION (FDC), REFER TO PLUMBING DRAWINGS.

STATE OF MISSOURI
MICHAEL L. KEHOE,
GOVERNOR

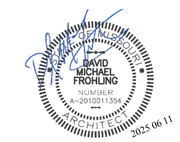

David Michael Frohling
A-2010011354

GASKIN HILL NORCROSS OF MISSOURI, INC.
300 South Jefferson Avenue, Suite 301, Springfield, MO 65806
417.869.0719
www.ghnae.com

OFFICE OF ADMINISTRATION
DIVISION OF FACILITIES MANAGEMENT, DESIGN AND CONSTRUCTION

DEPT. OF PUBLIC SAFETY
MISSOURI NATIONAL GUARD
DEPT. OF ADJUTANT GENERAL

CONSTRUCT NEW
44 SOLDIER BARRACKS
BUILDING 757

CAMP CROWDER
TRAINING SITE
890 RAY A CARVER DRIVE
NEOSHO, MISSOURI

PROJECT # T2234-01
SITE # 6260
ASSET # 8136260012

REVISION:
DATE:
REVISION:
DATE:
REVISION:
DATE:
ISSUE DATE: 06/11/2025

CAD DWG FILE: T2234-01-6260-8136260012-A-201
DRAWN BY: DMF
CHECKED BY: XXX
DESIGNED BY: DMF

SHEET TITLE:
EXTERIOR ELEVATIONS

SHEET NUMBER:
A-201

11 OF 32 SHEETS
JUNE 11, 2025

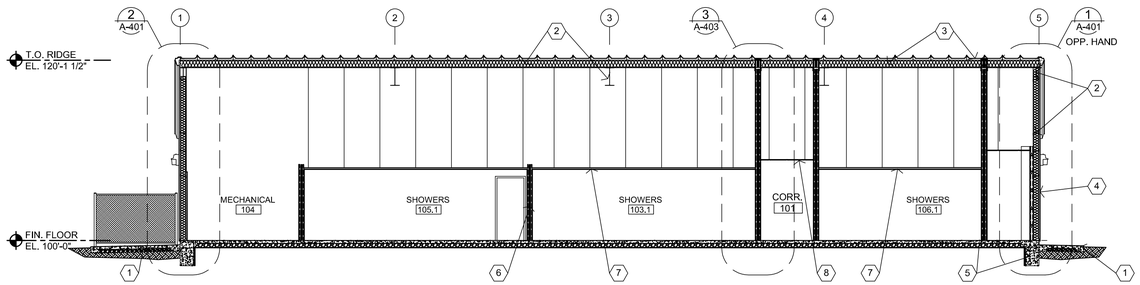

1 A-301 BUILDING SECTION

1/8" = 1'-0"

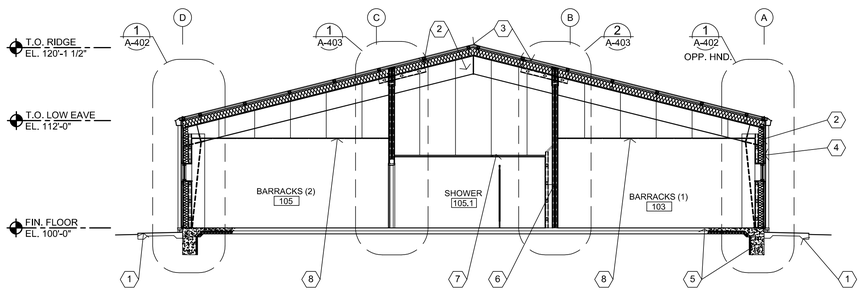

2 A-301 BUILDING SECTION

1/8" = 1'-0"

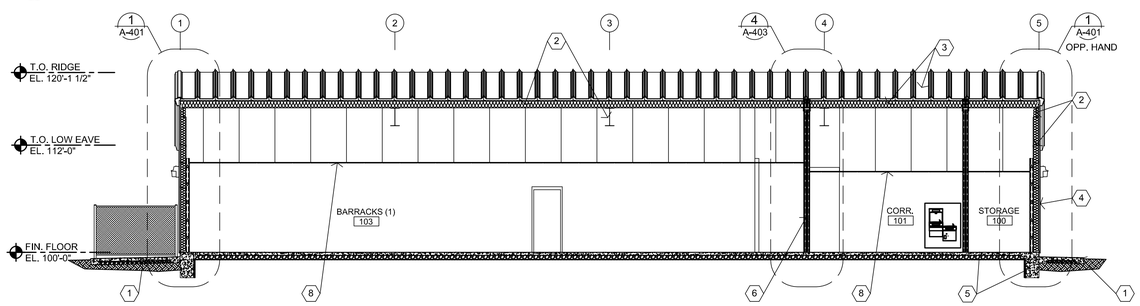

3 A-301 BUILDING SECTION

1/8" = 1'-0"

GENERAL NOTES

- A REFER TO PROJECT MANUAL FOR ADDITIONAL REQUIREMENTS.
- B REFER TO CIVIL, STRUCTURAL, MECHANICAL, ELECTRICAL AND PLUMBING DRAWINGS FOR ADDITIONAL REQUIREMENTS.
- C REFER TO PRE-ENGINEERED METAL BUILDING SUBMITTALS FOR ADDITIONAL REQUIREMENTS.
- D REFER TO EXTERIOR AND INTERIOR FINISH SCHEDULES FOR FINISH TYPES AND LOCATIONS.

KEY NOTES

1. CAST IN PLACE CONCRETE SLAB OR SIDEWALK, REFER TO CIVIL DRAWINGS.
2. PRE-ENGINEERED METAL BUILDING PRIMARY AND SECONDARY STRUCTURAL, REFER TO WALL SECTIONS AND SUBMITTALS.
3. PRE-ENGINEERED ROOF SYSTEM, REFER TO ROOF PLAN AND SUBMITTALS.
4. PRE-ENGINEERED METAL BUILDING WALL PANEL SYSTEM. REFER TO WALL SECTIONS AND SUBMITTALS.
5. CONCRETE SLAB ON GRADE AND FOOTINGS, REFER TO STRUCTURAL DRAWINGS.
6. INTERIOR PARTITIONS, REFER TO FLOOR PLANS.
7. SUSPENDED DRYWALL GRID AND GYPSUM BOARD CEILING SYSTEM, REFER TO REFLECTED CEILING PLAN FOR ADDITIONAL INFORMATION. PROVIDE OPEN FACED R-11 SOUND ATTENUATING INSULATION ABOVE CEILING (NOT SHOWN FOR CLARITY).
8. SUSPENDED ACOUSTICAL CEILING SYSTEM, REFER TO REFLECTED CEILING PLAN.

STATE OF MISSOURI
MICHAEL L. KEHOE,
GOVERNOR

David Michael Frohling
A-2010011354

GASKIN HILL NORCROSS OF MISSOURI, INC.
300 South Jefferson Avenue, Suite 301, Springfield, MO 65806
417.869.0719
www.ghnae.com

OFFICE OF ADMINISTRATION
DIVISION OF FACILITIES MANAGEMENT, DESIGN AND CONSTRUCTION

DEPT. OF PUBLIC SAFETY
MISSOURI NATIONAL GUARD
DEPT. OF ADJUTANT GENERAL

CONSTRUCT NEW
44 SOLDIER BARRACKS
BUILDING 757

CAMP CROWDER
TRAINING SITE
890 RAY A CARVER DRIVE
NEOSHO, MISSOURI

PROJECT # T2234-01
SITE # 6260
ASSET # 8136260012

REVISION:
DATE:
REVISION:
DATE:
REVISION:
DATE:
ISSUE DATE: 06/11/2025

CAD DWG FILE: T2234-01-6260-8136260012-A-301
DRAWN BY: DMF
CHECKED BY: XXX
DESIGNED BY: DMF

SHEET TITLE:
BUILDING SECTIONS

SHEET NUMBER:
A-301

11 OF 32 SHEETS
JUNE 11, 2025

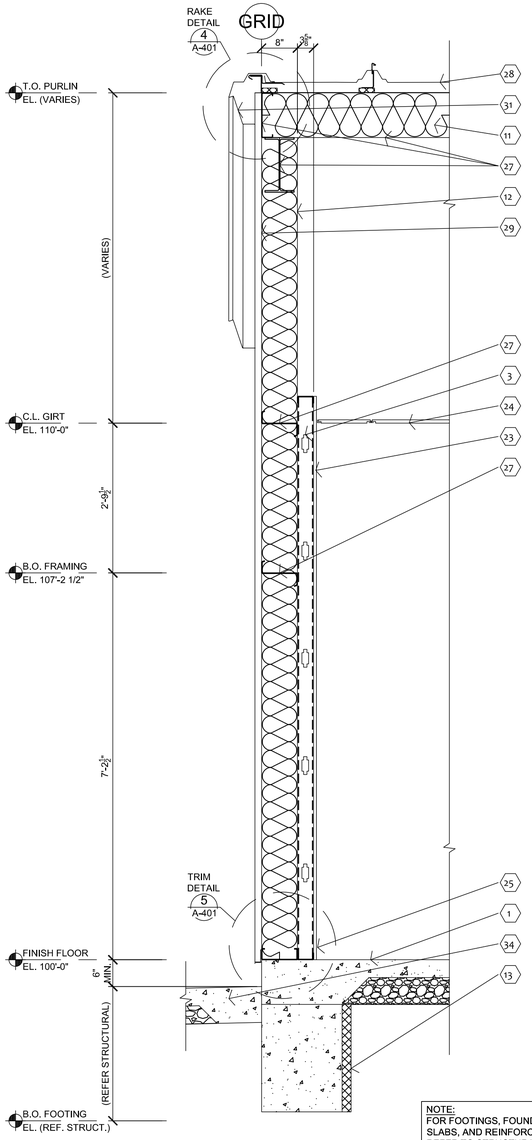

NOTE:
FOR FOOTINGS, FOUNDATIONS, SLABS, AND REINFORCEMENT, REFER TO STRUCTURAL DRAWINGS.

1 A-401 WALL SECTION
3/4" = 1'-0"

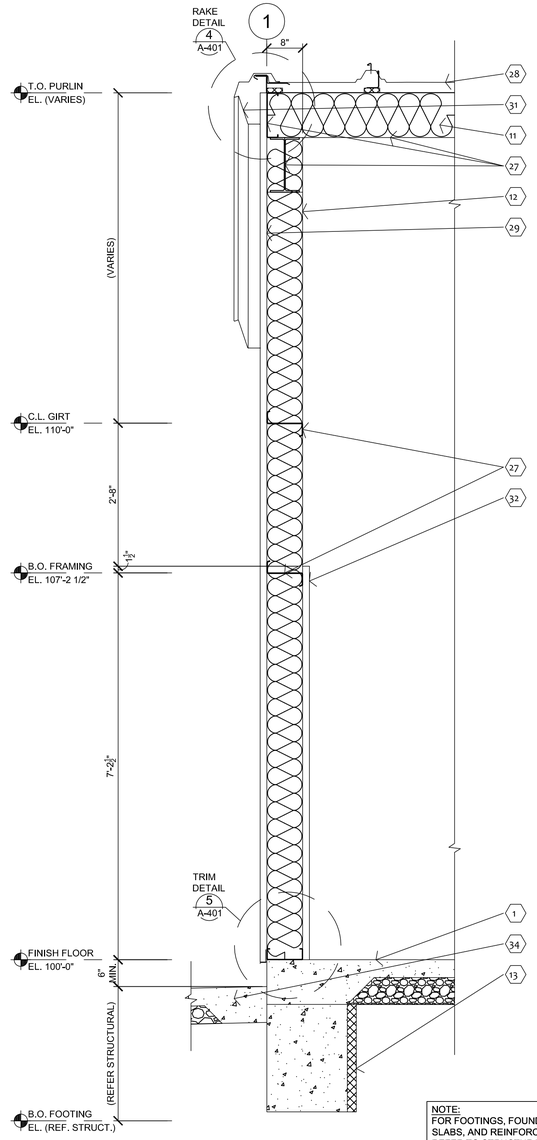

NOTE:
FOR FOOTINGS, FOUNDATIONS, SLABS, AND REINFORCEMENT, REFER TO STRUCTURAL DRAWINGS.

2 A-401 WALL SECTION
3/4" = 1'-0"

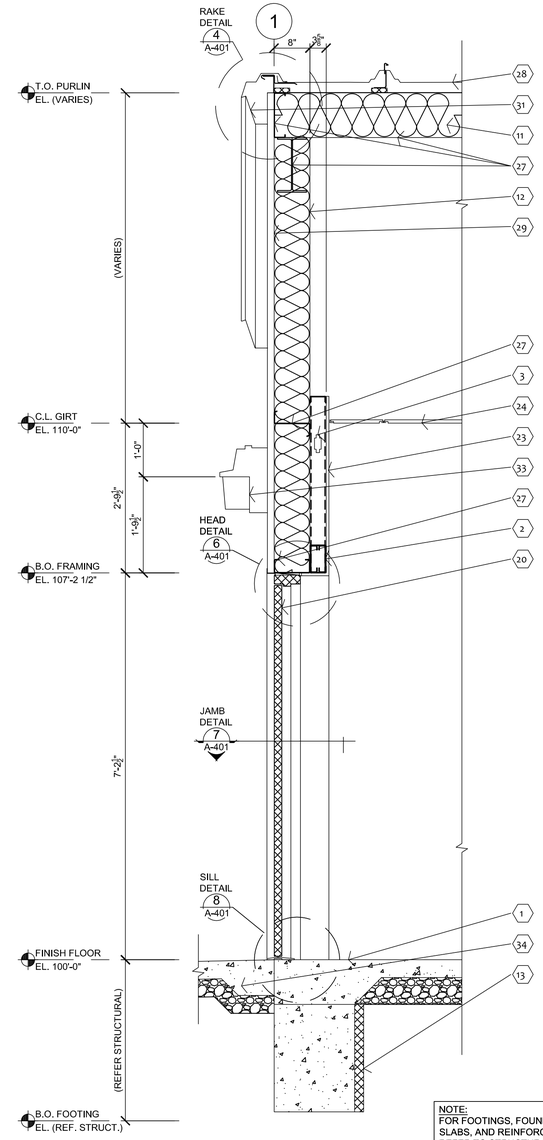

NOTE:
FOR FOOTINGS, FOUNDATIONS, SLABS, AND REINFORCEMENT, REFER TO STRUCTURAL DRAWINGS.

3 A-401 WALL SECTION
3/4" = 1'-0"

NOTE:
FOR ADDITIONAL REQUIREMENTS, REFER: 3 A-102

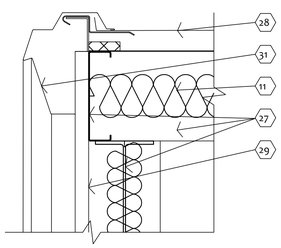

4 A-401 DETAIL
1 1/2" = 1'-0"

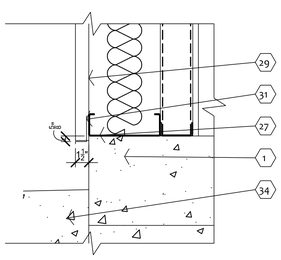

5 A-401 DETAIL
1 1/2" = 1'-0"

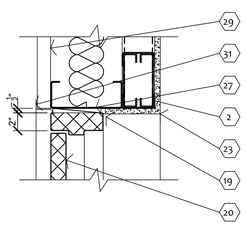

NOTE:
SHIM AND ANCHOR PER STEEL DOOR MANUFACTURER'S RECOMMENDATIONS AND PROVIDE FOAM IN PLACE INSULATION AT FRAME CAVITY AND JOINTS.

6 A-401 HEAD
1 1/2" = 1'-0"

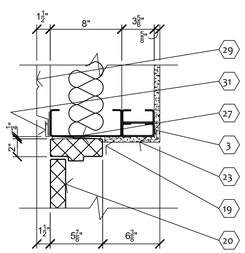

NOTE:
SHIM AND ANCHOR PER STEEL DOOR MANUFACTURER'S RECOMMENDATIONS AND PROVIDE FOAM IN PLACE INSULATION AT FRAME CAVITY AND JOINTS.

7 A-401 JAMB
1 1/2" = 1'-0"

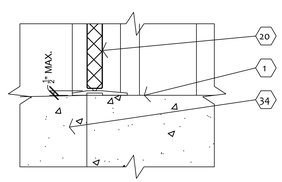

NOTE:
THRESHOLD SET IN SEALANT BED. REFER TO HARDWARE SCHEDULE. CHANGES IN LEVEL GREATER THAN 1/4" VERTICAL TO BE PROVIDED WITH BEVELS SLOPED 1:2 MAXIMUM.

8 A-401 SILL
1 1/2" = 1'-0"

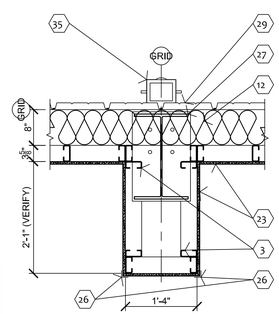

9 A-401 PLAN SECTION
3/4" = 1'-0"

KEY NOTES

REFER TO SHEET A-301 FOR GENERAL NOTES.

1. CONCRETE FLOOR SLAB. REFER TO STRUCTURAL DRAWINGS AND INTERIOR FINISH PLAN FOR ADDITIONAL REQUIREMENTS.
2. COLD FORM METAL BOX HEADER. REFER TO STRUCTURAL DRAWINGS FOR ADDITIONAL REQUIREMENTS.
3. 362S162-33 COLD FORM METAL FRAMING AT 24" O.C.. REFER TO INTERIOR WALL TYPE FOR ADDITIONAL REQUIREMENTS.
4. 600S162-33 COLD FORM METAL FRAMING AT 24" O.C.. REFER TO INTERIOR WALL TYPE FOR ADDITIONAL REQUIREMENTS.
5. 800S162 COLD FORM METAL FRAMING AT 24" O.C.. REFER TO STRUCTURAL DRAWINGS FOR ADDITIONAL REQUIREMENTS.
6. 50F125-18 COLD FORM RESILIENT CHANNELS HORIZONTAL AT 24" O.C. ON ONE SIDE WITH OUTSIDE LEG UP.
7. COLD FORM METAL DEFLECTION CHANNEL.
8. COLD FORM METAL TOP AND BOTTOM TRACK CONTINUOUS.
9. 3/4" FIRE TREATED PLYWOOD DECKING. REFER TO STRUCTURAL DRAWINGS FOR ADDITIONAL REQUIREMENTS.
10. SOLID SURFACE FABRICATION. REFER TO INTERIOR FINISHES SCHEDULE.
11. PRE-ENGINEERED METAL BUILDING ROOF BATT INSULATION (R-36) LINEAR SYSTEM. VAPOR BARRIER SUPPORTED BY HIGH STRENGTH STEEL STRAPS ATTACHED TO BOTTOM OF PRE-ENGINEERED METAL BUILDING ROOF PURLINS WITH (1) LAYER 8" (R-25) UN-FACED BATT INSULATION PARALLEL WITH PURLIN CAVITY AND (1) LAYER 3 1/2" (R-11) UN-FACED BATT INSULATION PERPENDICULAR OVER TOP OF ROOF PURLINS. SEAL ALL JOINTS WITH TAPE.
12. PRE-ENGINEERED METAL BUILDING CAVITY WALL UNFACED BATT INSULATION (R-25) SYSTEM (UNCOMPRESSED) WITH VAPOR BARRIER SUPPORTED WITH HIGH STRENGTH STEEL STRAPS ATTACHED TO GIRTS. SEAL ALL JOINTS WITH TAPE.
13. 2" RIGID INSULATION BOARD (R-10).
14. 6" UNFACED SOUND ATTENUATION BATT INSULATION. REFER TO FLOOR PLAN AND WALL TYPES.
15. REMOVABLE GUTTER DEBRIS SCREENS.
16. SNOW GUARDS. REFER TO ROOF PLAN.
17. FIRE STOPPING COMPRESSIBLE MINERAL WOOL.
18. FIRE STOPPING SEALANT CONTINUOUS AT PENETRATIONS.
19. SEALANT WITH BACKER ROD BOTH SIDES OF OPENING JOINTS. COLOR TO MATCH ADJACENT MATERIAL FINISH, UNLESS OTHERWISE NOTED.
20. STEEL DOOR AND FRAME SYSTEM. REFER TO FLOOR PLAN AND DOOR SCHEDULE FOR TYPES AND LOCATIONS.
21. NOT USED.
22. STEEL DOOR AND FRAME ENTRANCE SUBSILL EXTENSION WITH DRIP. SET IN SEALANT BED.
23. 5/8" TYPE "X" GYPSUM BOARD. REFER TO INTERIOR WALL TYPES FOR ADDITIONAL REQUIREMENTS.
24. SUSPENDED ACOUSTICAL LAY-IN CEILING SYSTEM. REFER TO REFLECTIVE CEILING PLAN AND INTERIOR FINISH SCHEDULE.
25. RESILIENT BASE. REFER TO INTERIOR FINISH SCHEDULE.
26. WALL AND DOOR PROTECTION CORNER GUARD. REFER TO INTERIOR FINISH PLAN.
27. PRE-ENGINEERED METAL BUILDING PRIMARY AND SECONDARY STRUCTURAL FRAMING. REFER TO SUBMITTALS FOR ADDITIONAL REQUIREMENTS.
28. PRE- ENGINEERED METAL BUILDING SHEET METAL STANDING SEAM (STRUCTURAL TRAPEZOIDAL PROFILE) ROOFING PANEL SYSTEM OVER THERMAL BLOCKS (R-5).
29. PRE-ENGINEERED METAL BUILDING EXTERIOR WALL PANEL SYSTEM OVER THERMAL BREAK TAPE.
30. PRE-ENGINEERED METAL BUILDING SHEET METAL GUTTERING AND DOWNSPOUT SYSTEM.
31. PRE-ENGINEERED METAL BUILDING SHEET METAL TRIM, FLASHING, COUNTER- FLASHING, DRIP CLOSURES, TRANSITIONS, CLADDING, FLUTE CLOSURES AND ACCESSORIES.
32. PRE-ENGINEERED METAL BUILDING INTERIOR WALL PANEL SYSTEM.
33. EXTERIOR LIGHT FIXTURE SYSTEM, REFER TO ELECTRICAL DRAWINGS.
34. CONCRETE SIDEWALK SLOPING 1/4:12 AWAY FROM BUILDING. REFER TO CIVIL DRAWINGS.
35. DOWNSPOUT COLLECTION SYSTEM, REFER TO CIVIL DRAWINGS.

STATE OF MISSOURI
MICHAEL L. KEHOE,
GOVERNOR

David Michael Frohling
A-2010011354

GASKIN HILL NORCROSS OF MISSOURI, INC.
300 South Jefferson Avenue, Suite 301, Springfield, MO 65806
417.869.0719
www.ghnae.com

OFFICE OF ADMINISTRATION
DIVISION OF FACILITIES MANAGEMENT, DESIGN AND CONSTRUCTION

DEPT. OF PUBLIC SAFETY
MISSOURI NATIONAL GUARD
DEPT. OF ADJUTANT GENERAL

CONSTRUCT NEW
44 SOLDIER BARRACKS
BUILDING 757

CAMP CROWDER
TRAINING SITE
890 RAY A CARVER DRIVE
NEOSHO, MISSOURI

PROJECT # T2234-01
SITE # 6260
ASSET # 8136260012

REVISION:
DATE:
REVISION:
DATE:
REVISION:
DATE:
ISSUE DATE: 06/11/2025

CAD DWG FILE: T2234-01-6260-8136260012-A-401
DRAWN BY: DMF
CHECKED BY: XXX
DESIGNED BY: DMF

SHEET TITLE:
WALL SECTIONS

SHEET NUMBER:
A-401

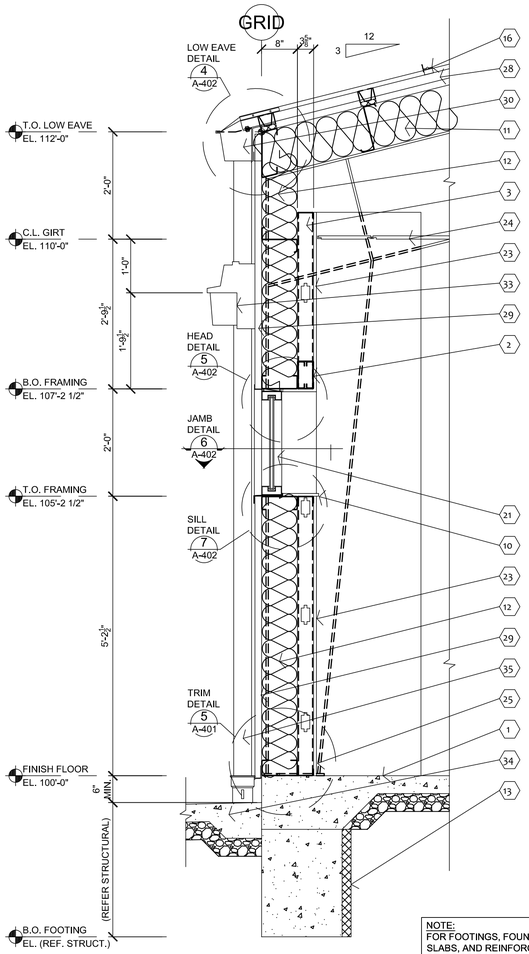

NOTE:
FOR FOOTINGS, FOUNDATIONS, SLABS, AND REINFORCEMENT, REFER TO STRUCTURAL DRAWINGS.

1 A-402 WALL SECTION
3/4" = 1'-0"

2 A-402 NOT USED
NO SCALE

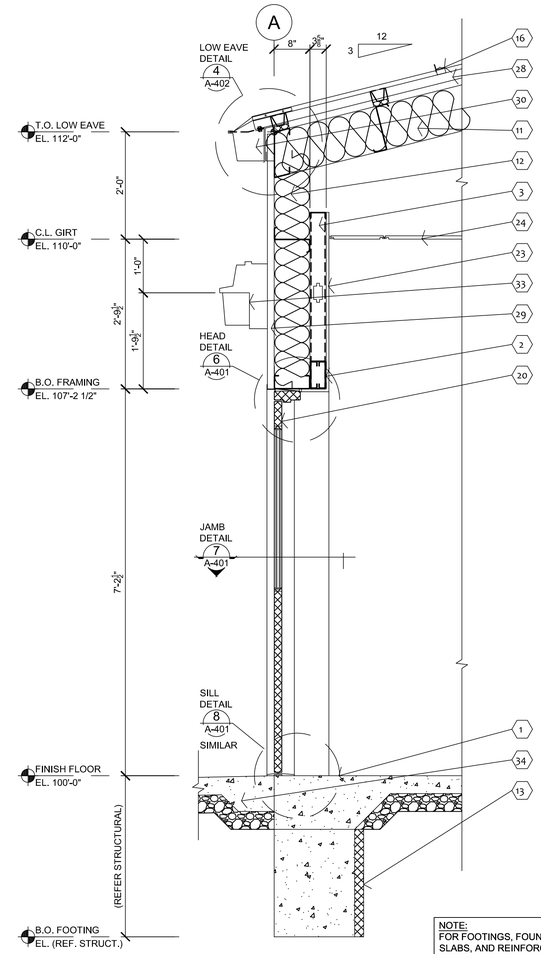

NOTE:
FOR FOOTINGS, FOUNDATIONS, SLABS, AND REINFORCEMENT, REFER TO STRUCTURAL DRAWINGS.

3 A-402 WALL SECTION
3/4" = 1'-0"

NOTE:
FOR ADDITIONAL REQUIREMENTS, REFER: 2 A-102

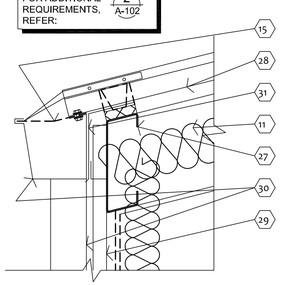

4 A-402 DETAIL
1 1/2" = 1'-0"

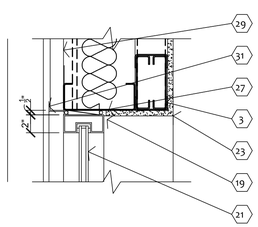

NOTE:
SHIM AND ANCHOR PER WINDOW MANUFACTURER'S RECOMMENDATIONS AND PROVIDE FOAM IN PLACE INSULATION AT FRAME JOINTS.

5 A-402 HEAD
1 1/2" = 1'-0"

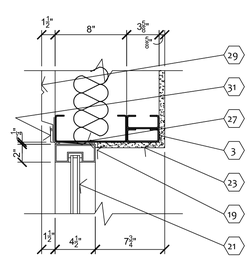

NOTE:
SHIM AND ANCHOR PER WINDOW MANUFACTURER'S RECOMMENDATIONS AND PROVIDE FOAM IN PLACE INSULATION AT FRAME JOINTS.

6 A-402 JAMB
1 1/2" = 1'-0"

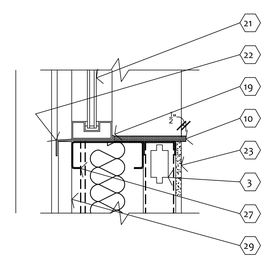

NOTE:
SHIM AND ANCHOR PER WINDOW MANUFACTURER'S RECOMMENDATIONS AND PROVIDE FOAM IN PLACE INSULATION AT FRAME JOINTS.

7 A-402 SILL
1 1/2" = 1'-0"

KEY NOTES

REFER TO SHEET A-301 FOR GENERAL NOTES.

1. CONCRETE FLOOR SLAB. REFER TO STRUCTURAL DRAWINGS AND INTERIOR FINISH PLAN FOR ADDITIONAL REQUIREMENTS.
2. COLD FORM METAL BOX HEADER. REFER TO STRUCTURAL DRAWINGS FOR ADDITIONAL REQUIREMENTS.
3. 362S162-33 COLD FORM METAL FRAMING AT 24" O.C.. REFER TO INTERIOR WALL TYPE FOR ADDITIONAL REQUIREMENTS.
4. 600S162-33 COLD FORM METAL FRAMING AT 24" O.C.. REFER TO INTERIOR WALL TYPE FOR ADDITIONAL REQUIREMENTS.
5. 800S162 COLD FORM METAL FRAMING AT 24" O.C.. REFER TO STRUCTURAL DRAWINGS FOR ADDITIONAL REQUIREMENTS.
6. 50F125-18 COLD FORM RESILIENT CHANNELS HORIZONTAL AT 24" O.C. ON ONE SIDE WITH OUTSIDE LEG UP.
7. COLD FORM METAL DEFLECTION CHANNEL.
8. COLD FORM METAL TOP AND BOTTOM TRACK CONTINUOUS.
9. 3/4" FIRE TREATED PLYWOOD DECKING. REFER TO STRUCTURAL DRAWINGS FOR ADDITIONAL REQUIREMENTS.
10. SOLID SURFACE FABRICATION. REFER TO INTERIOR FINISHES SCHEDULE.
11. PRE-ENGINEERED METAL BUILDING ROOF BATT INSULATION (R-36) LINEAR SYSTEM. VAPOR BARRIER SUPPORTED BY HIGH STRENGTH STEEL STRAPS ATTACHED TO BOTTOM OF PRE-ENGINEERED METAL BUILDING ROOF PURLINS WITH (1) LAYER 8" (R-25) UN-FACED BATT INSULATION PARALLEL WITH PURLIN CAVITY AND (1) LAYER 3 1/2" (R-11) UN-FACED BATT INSULATION PERPENDICULAR OVER TOP OF ROOF PURLINS. SEAL ALL JOINTS WITH TAPE.
12. PRE-ENGINEERED METAL BUILDING CAVITY WALL UNFACED BATT INSULATION (R-25) SYSTEM (UNCOMPRESSED) WITH VAPOR BARRIER SUPPORTED WITH HIGH STRENGTH STEEL STRAPS ATTACHED TO GIRTS. SEAL ALL JOINTS WITH TAPE.
13. 2" RIGID INSULATION BOARD (R-10).
14. 6" UNFACED SOUND ATTENUATION BATT INSULATION. REFER TO FLOOR PLAN AND WALL TYPES.
15. REMOVABLE GUTTER DEBRIS SCREENS.
16. SNOW GUARDS. REFER TO ROOF PLAN.
17. FIRE STOPPING COMPRESSIBLE MINERAL WOOL.
18. FIRE STOPPING SEALANT CONTINUOUS AT PENETRATIONS.
19. SEALANT WITH BACKER ROD BOTH SIDES OF OPENING JOINTS. COLOR TO MATCH ADJACENT MATERIAL FINISH, UNLESS OTHERWISE NOTED.
20. STEEL DOOR AND FRAME SYSTEM. REFER TO FLOOR PLAN AND DOOR SCHEDULE FOR TYPES AND LOCATIONS.
21. ALUMINUM ENTRANCE AND STOREFRONT WINDOW SYSTEM, REFER TO FLOOR PLANS AND SCHEDULES FOR TYPES AND LOCATIONS.
22. ALUMINUM ENTRANCE AND STOREFRONT SUBSILL EXTENSION WITH DRIP. SET IN SEALANT BED.
23. 5/8" TYPE "X" GYPSUM BOARD. REFER TO INTERIOR WALL TYPES FOR ADDITIONAL REQUIREMENTS.
24. SUSPENDED ACOUSTICAL LAY-IN CEILING SYSTEM. REFER TO REFLECTIVE CEILING PLAN AND INTERIOR FINISH SCHEDULE.
25. RESILIENT BASE. REFER TO INTERIOR FINISH SCHEDULE.
26. WALL AND DOOR PROTECTION CORNER GUARD. REFER TO INTERIOR FINISH PLAN.
27. PRE-ENGINEERED METAL BUILDING PRIMARY AND SECONDARY STRUCTURAL FRAMING. REFER TO SUBMITTALS FOR ADDITIONAL REQUIREMENTS.
28. PRE- ENGINEERED METAL BUILDING SHEET METAL STANDING SEAM (STRUCTURAL TRAPEZOIDAL PROFILE) ROOFING PANEL SYSTEM OVER THERMAL BLOCKS (R-5).
29. PRE-ENGINEERED METAL BUILDING EXTERIOR WALL PANEL SYSTEM OVER THERMAL BREAK TAPE.
30. PRE-ENGINEERED METAL BUILDING SHEET METAL GUTTERING AND DOWNSPOUT SYSTEM.
31. PRE-ENGINEERED METAL BUILDING SHEET METAL TRIM, FLASHING, COUNTER- FLASHING, DRIP CLOSURES, TRANSITIONS, CLADDING, FLUTE CLOSURES AND ACCESSORIES.
32. PRE-ENGINEERED METAL BUILDING INTERIOR WALL PANEL SYSTEM.
33. EXTERIOR LIGHT FIXTURE SYSTEM, REFER TO ELECTRICAL DRAWINGS.
34. CONCRETE SIDEWALK SLOPING 1/4:12 AWAY FROM BUILDING. REFER TO CIVIL DRAWINGS.
35. DOWNSPOUT COLLECTION SYSTEM, REFER TO CIVIL DRAWINGS.

STATE OF MISSOURI
MICHAEL L. KEHOE,
GOVERNOR

David Michael Frohling
A-2010011354

GASKIN HILL NORCROSS OF MISSOURI, INC.
300 South Jefferson Avenue, Suite 301, Springfield, MO 65806
417.869.0719
www.ghnae.com

OFFICE OF ADMINISTRATION
DIVISION OF FACILITIES MANAGEMENT, DESIGN AND CONSTRUCTION

DEPT. OF PUBLIC SAFETY
MISSOURI NATIONAL GUARD
DEPT. OF ADJUTANT GENERAL

CONSTRUCT NEW
44 SOLDIER BARRACKS
BUILDING 757

CAMP CROWDER
TRAINING SITE
890 RAY A CARVER DRIVE
NEOSHO, MISSOURI

PROJECT # T2234-01
SITE # 6260
ASSET # 8136260012

REVISION:
DATE:
REVISION:
DATE:
REVISION:
DATE:
ISSUE DATE: 06/11/2025

CAD DWG FILE: T2234-01-6260-8136260012-A-402
DRAWN BY: DMF
CHECKED BY: XXX
DESIGNED BY: DMF

SHEET TITLE:
WALL SECTIONS

SHEET NUMBER:
A-402

JUNE 11, 2025

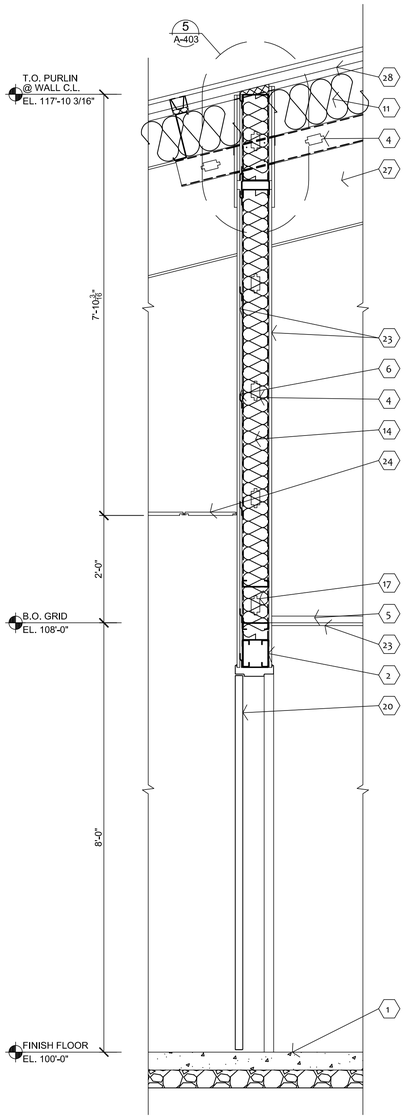

1 WALL SECTION
A-403 3/4" = 1'-0"

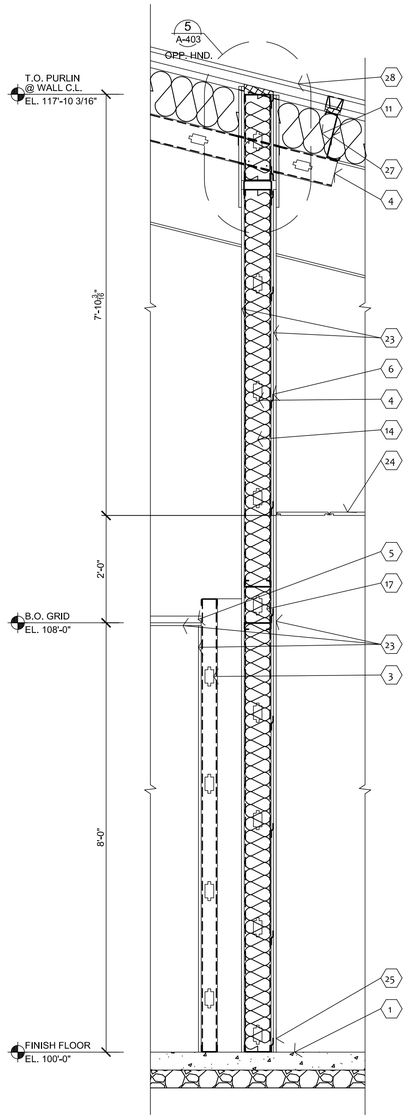

2 WALL SECTION
A-403 3/4" = 1'-0"

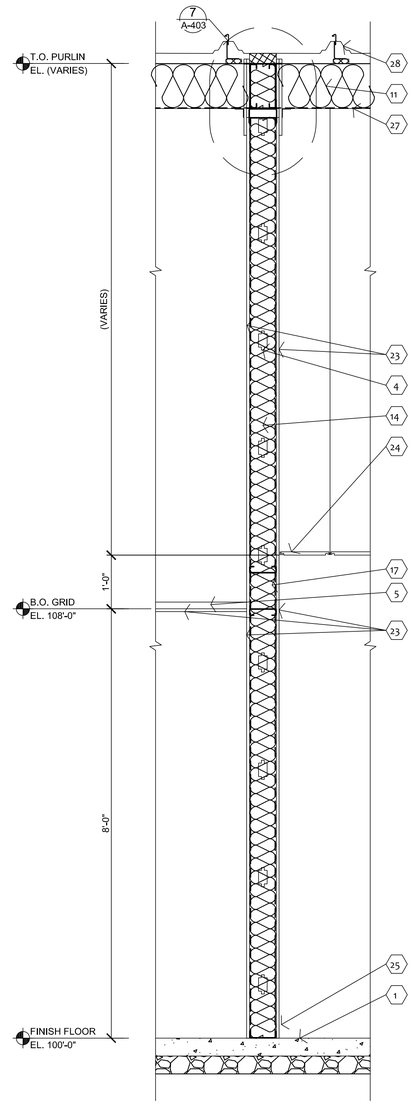

3 WALL SECTION
A-403 3/4" = 1'-0"

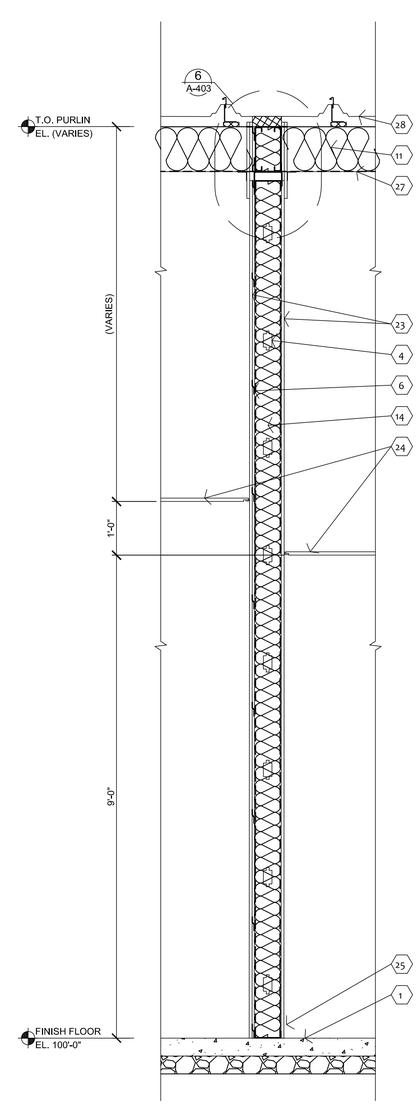

4 WALL SECTION
A-403 3/4" = 1'-0"

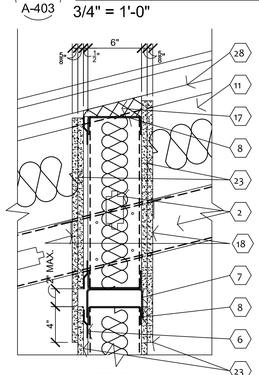

SPECIAL NOTE:
(1) HOUR FIRE RATED PARTITION EQUAL TO UL DESIGN NO. U419 ASSEMBLY. REFER TO INTERIOR WALL TYPES FOR ADDITIONAL REQUIREMENTS.

HEAD OF WALL JOINT SYSTEM (PARALLEL TO PURLINS) EQUAL TO UL DESIGN NO. XHBO.CJ-D-0030.

REFER TO UL LISTED ASSEMBLY NUMBERS FOR ADDITIONAL REQUIREMENTS.

NOTE:
ROOF INSULATION AND VAPOR BARRIER TO BE CUT. PROVIDE ADDITIONAL STEEL SUPPORT BANDING AS REQUIRED. PROVIDE DOUBLE SIDED TAPE FOR ATTACHMENT OF VAPOR BARRIER TO WALL. SEAL VAPOR BARRIER JOINTS.

5 DETAIL
A-403 1 1/2" = 1'-0"
FIRE-RATED WALL TERMINATION (PARALLEL TO ROOF PURLINS)

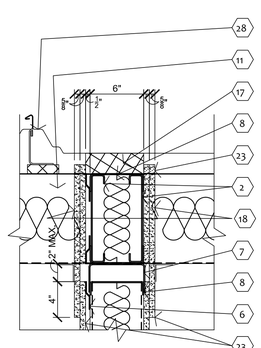

SPECIAL NOTE:
(1) HOUR FIRE RATED PARTITION EQUAL TO UL DESIGN NO. U419 ASSEMBLY. REFER TO INTERIOR WALL TYPES FOR ADDITIONAL REQUIREMENTS.

HEAD OF WALL JOINT SYSTEM (PERPENDICULAR TO PURLINS) EQUAL TO UL DESIGN NO. XHBO.CJ-D-0031.

REFER TO UL LISTED ASSEMBLY NUMBERS FOR ADDITIONAL REQUIREMENTS.

NOTE:
ROOF INSULATION AND VAPOR BARRIER TO BE CUT. PROVIDE ADDITIONAL STEEL SUPPORT BANDING AS REQUIRED. PROVIDE DOUBLE SIDED TAPE FOR ATTACHMENT OF VAPOR BARRIER TO WALL. SEAL VAPOR BARRIER JOINTS.

6 DETAIL
A-403 1 1/2" = 1'-0"
FIRE-RATED WALL TERMINATION (PARALLEL TO ROOF PURLINS)

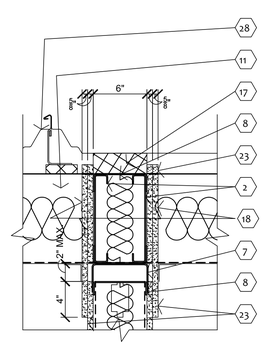

SPECIAL NOTE:
(1) HOUR FIRE RATED PARTITION EQUAL TO UL DESIGN NO. U419 ASSEMBLY. REFER TO INTERIOR WALL TYPES FOR ADDITIONAL REQUIREMENTS.

HEAD OF WALL JOINT SYSTEM (PERPENDICULAR TO PURLINS) EQUAL TO UL DESIGN NO. XHBO.CJ-D-0031.

REFER TO UL LISTED ASSEMBLY NUMBERS FOR ADDITIONAL REQUIREMENTS.

NOTE:
ROOF INSULATION AND VAPOR BARRIER TO BE CUT. PROVIDE ADDITIONAL STEEL SUPPORT BANDING AS REQUIRED. PROVIDE DOUBLE SIDED TAPE FOR ATTACHMENT OF VAPOR BARRIER TO WALL. SEAL VAPOR BARRIER JOINTS.

7 DETAIL
A-403 1 1/2" = 1'-0"
FIRE-RATED WALL TERMINATION (PARALLEL TO ROOF PURLINS)

KEY NOTES

REFER TO SHEET A-301 FOR GENERAL NOTES.

1. CONCRETE FLOOR SLAB. REFER TO STRUCTURAL DRAWINGS AND INTERIOR FINISH PLAN FOR ADDITIONAL REQUIREMENTS.
2. COLD FORM METAL BOX HEADER. REFER TO STRUCTURAL DRAWINGS FOR ADDITIONAL REQUIREMENTS.
3. 362S162-33 COLD FORM METAL FRAMING AT 24" O.C.. REFER TO INTERIOR WALL TYPE FOR ADDITIONAL REQUIREMENTS.
4. 600S162-33 COLD FORM METAL FRAMING AT 24" O.C.. REFER TO INTERIOR WALL TYPE FOR ADDITIONAL REQUIREMENTS.
5. SUSPENDED GYPSUM BOARD GRID, SUPPORT AT 48" O.C. MIN. EACH WAY.
6. 50F125-18 COLD FORM RESILIENT CHANNELS HORIZONTAL AT 24" O.C. ON ONE SIDE WITH OUTSIDE LEG UP.
7. COLD FORM METAL DEFLECTION CHANNEL.
8. COLD FORM METAL TOP AND BOTTOM TRACK CONTINUOUS.
9. NOT USED.
10. SOLID SURFACE FABRICATION. REFER TO INTERIOR FINISHES SCHEDULE.
11. PRE-ENGINEERED METAL BUILDING ROOF BATT INSULATION (R-36) LINEAR SYSTEM. VAPOR BARRIER SUPPORTED BY HIGH STRENGTH STEEL STRAPS ATTACHED TO BOTTOM OF PRE-ENGINEERED METAL BUILDING ROOF PURLINS WITH (1) LAYER 8" (R-25) UN-FACED BATT INSULATION PARALLEL WITH PURLIN CAVITY AND (1) LAYER 3 1/2" (R-11) UN-FACED BATT INSULATION PERPENDICULAR OVER TOP OF ROOF PURLINS. SEAL ALL JOINTS WITH TAPE.
12. PRE-ENGINEERED METAL BUILDING CAVITY WALL UNFACED BATT INSULATION (R-25) SYSTEM (UNCOMPRESSED) WITH VAPOR BARRIER SUPPORTED WITH HIGH STRENGTH STEEL STRAPS ATTACHED TO GIRTS. SEAL ALL JOINTS WITH TAPE.
13. 2" RIGID INSULATION BOARD (R-10).
14. 6" UNFACED SOUND ATTENUATION BATT INSULATION. REFER TO FLOOR PLAN AND WALL TYPES.
15. REMOVABLE GUTTER DEBRIS SCREENS.
16. SNOW GUARDS. REFER TO ROOF PLAN.
17. FIRE STOPPING COMPRESSIBLE MINERAL WOOL.
18. FIRE STOPPING SEALANT CONTINUOUS AT PENETRATIONS.
19. SEALANT WITH BACKER ROD BOTH SIDES OF OPENING JOINTS. COLOR TO MATCH ADJACENT MATERIAL FINISH, UNLESS OTHERWISE NOTED.
20. STEEL DOOR AND FRAME SYSTEM. REFER TO FLOOR PLAN AND DOOR SCHEDULE FOR TYPES AND LOCATIONS.
21. NOT USED.
22. ALUMINUM ENTRANCE AND STOREFRONT SUBSILL EXTENSION WITH DRIP. SET IN SEALANT BED.
23. 5/8" TYPE "X" GYPSUM BOARD. REFER TO INTERIOR WALL TYPES FOR ADDITIONAL REQUIREMENTS.
24. SUSPENDED ACOUSTICAL LAY-IN CEILING SYSTEM. REFER TO REFLECTIVE CEILING PLAN AND INTERIOR FINISH SCHEDULE.
25. RESILIENT BASE. REFER TO INTERIOR FINISH SCHEDULE.
26. WALL AND DOOR PROTECTION CORNER GUARD. REFER TO INTERIOR FINISH PLAN.
27. PRE-ENGINEERED METAL BUILDING PRIMARY AND SECONDARY STRUCTURAL FRAMING. REFER TO SUBMITTALS FOR ADDITIONAL REQUIREMENTS.
28. PRE- ENGINEERED METAL BUILDING SHEET METAL STANDING SEAM (STRUCTURAL TRAPEZOIDAL PROFILE) ROOFING PANEL SYSTEM OVER THERMAL BLOCKS (R-5).
29. PRE-ENGINEERED METAL BUILDING EXTERIOR WALL PANEL SYSTEM OVER THERMAL BREAK TAPE.
30. PRE-ENGINEERED METAL BUILDING SHEET METAL GUTTERING AND DOWNSPOUT SYSTEM.
31. PRE-ENGINEERED METAL BUILDING SHEET METAL TRIM, FLASHING, COUNTER- FLASHING, DRIP CLOSURES, TRANSITIONS, CLADDING, FLUTE CLOSURES AND ACCESSORIES.
32. PRE-ENGINEERED METAL BUILDING INTERIOR WALL PANEL SYSTEM.
33. EXTERIOR LIGHT FIXTURE SYSTEM. REFER TO ELECTRICAL DRAWINGS.
34. CONCRETE SIDEWALK SLOPING 1/4:12 AWAY FROM BUILDING. REFER TO CIVIL DRAWINGS.
35. DOWNSPOUT COLLECTION SYSTEM. REFER TO CIVIL DRAWINGS.

STATE OF MISSOURI
MICHAEL L. KEHOE,
GOVERNOR

David Michael Frohling
A-2010011354

GASKIN HILL NORCROSS OF MISSOURI, INC.
300 South Jefferson Avenue, Suite 301, Springfield, MO 65806
417.869.0719
www.ghnae.com

OFFICE OF ADMINISTRATION
DIVISION OF FACILITIES MANAGEMENT, DESIGN AND CONSTRUCTION

DEPT. OF PUBLIC SAFETY
MISSOURI NATIONAL GUARD
DEPT. OF ADJUTANT GENERAL

CONSTRUCT NEW
44 SOLDIER BARRACKS
BUILDING 757

CAMP CROWDER
TRAINING SITE
890 RAY A CARVER DRIVE
NEOSHO, MISSOURI

PROJECT # T2234-01
SITE # 6260
ASSET # 8136260012

REVISION:
DATE:
REVISION:
DATE:
REVISION:
DATE:
ISSUE DATE: 06/11/2025

CAD DWG FILE: T2234-01-6260-8136260012-A-403
DRAWN BY: DMF
CHECKED BY: XXX
DESIGNED BY: DMF

SHEET TITLE:
WALL SECTIONS

SHEET NUMBER:
A-403

15 OF 32 SHEETS
JUNE 11, 2025

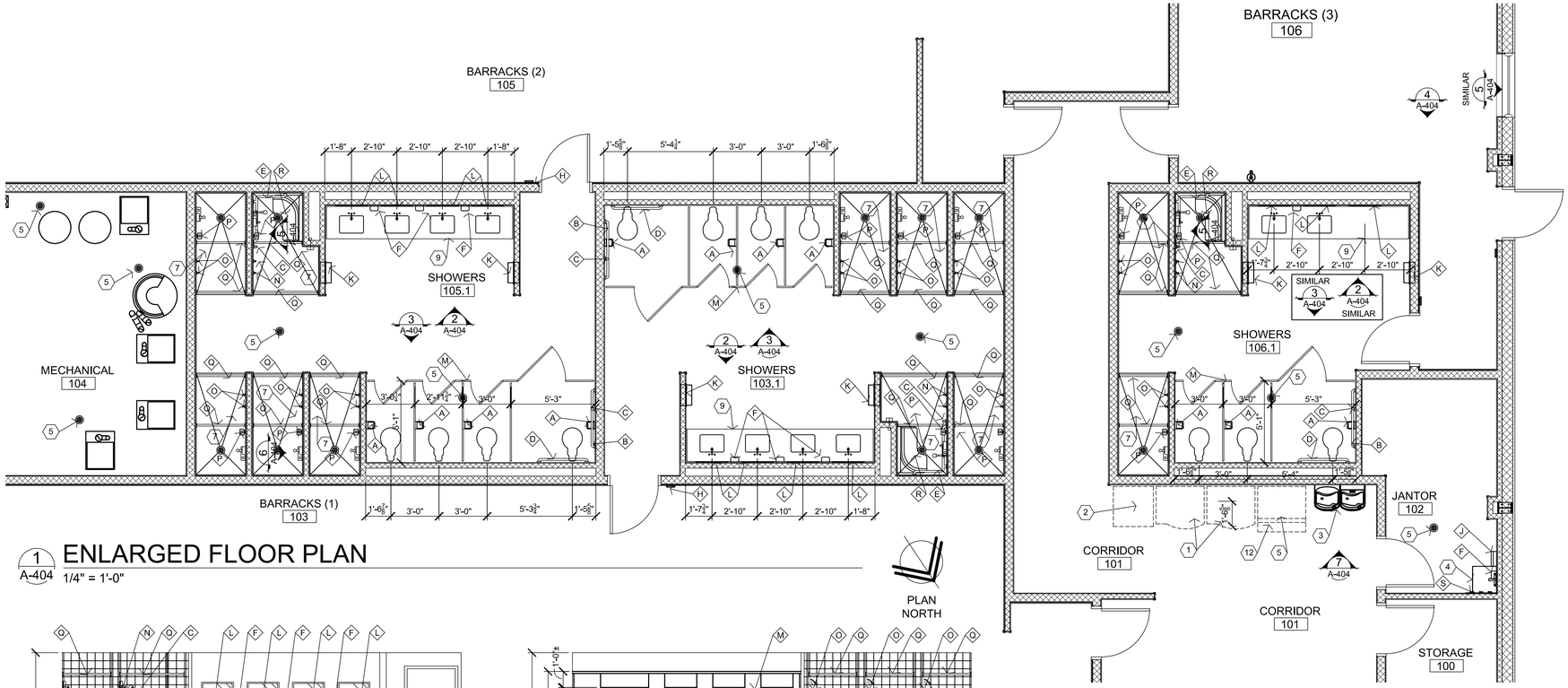

1 A-404 ENLARGED FLOOR PLAN
1/4" = 1'-0"

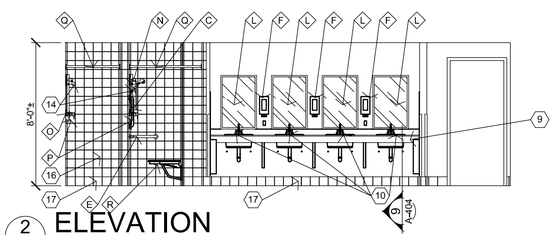

2 A-404 ELEVATION
1/4" = 1'-0"

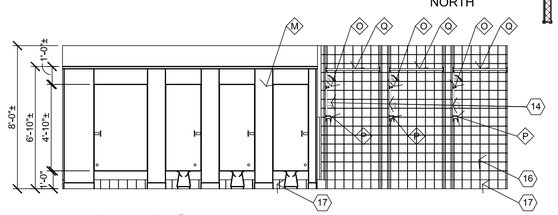

3 A-404 ELEVATION
1/4" = 1'-0"

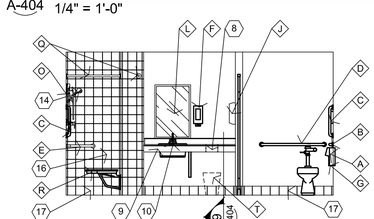

4 A-404 ELEVATION
1/4" = 1'-0"

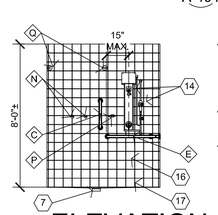

5 A-404 ELEVATION
1/4" = 1'-0"

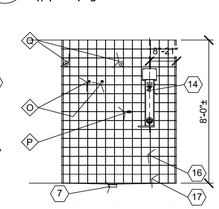

6 A-404 ELEVATION
1/4" = 1'-0"

SPECIAL NOTE:
DRINKING FOUNTAIN UNIT TO BE PROVIDED WITH CANE GUARD, REFER TO PLUMBING DRAWINGS. REFER TO ELEVATIONS FOR REQUIRED LEVEL CONFIGURATIONS.

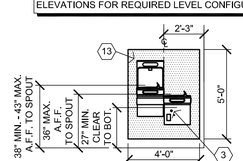

7 A-404 ELEVATION
1/4" = 1'-0"

GRAB BAR SUPPORT BAR FASTENER & MOUNTING SUPPORT SHALL BE ABLE TO WITHSTAND 250#/FT. IN BENDING, SHEAR & TENSION.

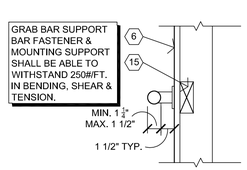

8 A-404 DETAIL
1 1/2" = 1'-0"

NOTE:
ALL EXPOSED PIPING TO BE COVERED WITH INSULATION.

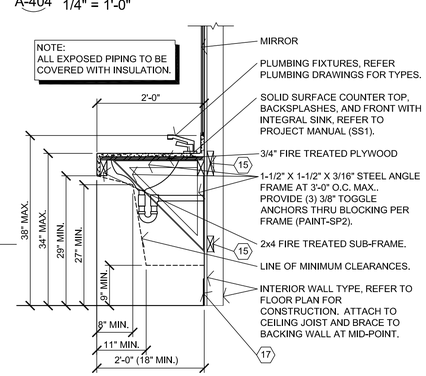

9 A-404 SECTION
3/4" = 1'-0"

GENERAL NOTES

- (A) REFER TO PROJECT MANUAL FOR ADDITIONAL REQUIREMENTS.
- (B) ALL DIMENSIONS ARE TO ROUGH FACE OF FRAMING OR CENTERLINE OF FIXTURE UNLESS OTHERWISE INDICATED. TOILET PARTITION DIMENSIONS ARE TO FACE OF GYPSUM BOARD AND CENTERLINE OF PANEL. PANEL 1" (NOMINAL) THICKNESS DIMENSIONS NOT SHOWN FOR CLARITY.
- (C) REFER TO PLUMBING PLANS FOR PLUMBING FIXTURE TYPES.
- (D) REFER TO INTERIOR FINISH PLANS FOR MATERIALS AND FINISHES.
- (E) REFER TO FLOOR PLAN FOR WALL TYPES AND ASSEMBLIES.

KEY NOTES

1. VENDING MACHINE (BY OTHERS).
2. DEDICATED RECYCLING CONTAINER (BY OTHERS).
3. HIGH / LOW DRINKING FOUNTAIN WITH CAIN GUARD, REFER TO PLUMBING DRAWINGS.
4. JANITOR'S SINK, REFER TO PLUMBING DRAWINGS.
5. FLOOR DRAIN, REFER TO DETAIL 2/A-501 AND PLUMBING DRAWINGS.
6. WALL CONSTRUCTION, REFER TO FLOOR PLAN FOR TYPES.
7. SHOWER TRENCH DRAIN, REFER TO STRUCTURAL AND PLUMBING DRAWINGS. SLOPE CONCRETE FLOOR 1/4":12" MAXIMUM TO DRAIN.
8. 8" DIAMETER COUNTER OPENING FOR BELOW COUNTER TRASH DISPOSAL.
9. SOLID SURFACE COUNTER TOP, SINK, FRONT, BACKSPLASH & SIDESPLASH.
10. FAUCET, REFER TO PLUMBING DRAWINGS.
11. (NOT USED).
12. FUTURE ICE MACHINE (BY OTHERS).
13. STAINLESS STEEL (24 GA. WITH US32D FINISH) WALL COVERING WITH EXPOSED EDGES BEVELED.
14. SHOWER UNIT, REFER TO PLUMBING DRAWINGS
15. FIRE TREATED 2X WOOD BLOCKING.
16. GLAZED WALL TILE, REFER TO FINISH SCHEDULE ON SHEET I-101.
17. GLAZED TILE BASE - REFER TO FINISH SCHEDULE ON SHEET I-101.

ACCESSORY SCHEDULE

MK	DESCRIPTION	MANUFACTURER	SERIES / MODEL	MOUNTING LOCATION	ACCESSORY NOTES
A	TISSUE PAPER DISPENSER	(REFER TO PROJECT MANUAL)	DOUBLE ROLL, STACKED	REFER PLANS, ELEVATIONS, LEGEND	—
B	GRAB BAR	(REFER TO PROJECT MANUAL)	48" LENGTH	REFER PLANS, ELEVATIONS, LEGEND	—
C	GRAB BAR	(REFER TO PROJECT MANUAL)	18" LENGTH	REFER PLANS, ELEVATIONS, LEGEND	—
D	GRAB BAR	(REFER TO PROJECT MANUAL)	42" LENGTH	REFER PLANS, ELEVATIONS, LEGEND	—
E	GRAB BAR	(REFER TO PROJECT MANUAL)	24"x36" L-SHAPED	REFER PLANS, ELEVATIONS, LEGEND	—
F	SOAP DISPENSER	(REFER TO PROJECT MANUAL)	(REFER TO PROJECT MANUAL)	REFER PLANS, ELEVATIONS, LEGEND	NOTE 5
G	SANITARY NAPKIN RECEPTACLE	(REFER TO PROJECT MANUAL)	(REFER TO PROJECT MANUAL)	REFER PLANS, ELEVATIONS, LEGEND	SHOWER 106A ONLY
H	ACCESSIBLE R.R. SIGN (MEN)	(REFER TO PROJECT MANUAL)	(REFER TO PROJECT MANUAL)	REFER PLANS, ELEVATIONS, LEGEND	NOTE 6
I	ACCESSIBLE R.R. SIGN (WOMEN)	(REFER TO PROJECT MANUAL)	(REFER TO PROJECT MANUAL)	REFER PLANS, ELEVATIONS, LEGEND	NOTE 6
J	PAPER TOWEL DISPENSER	(REFER TO PROJECT MANUAL)	(REFER TO PROJECT MANUAL)	REFER PLANS, ELEVATIONS, LEGEND	NOTE 7
K	PAPER TOWEL DISPENSER / WASTE RECEPTACLE	(REFER TO PROJECT MANUAL)	(REFER TO PROJECT MANUAL)	REFER PLANS, ELEVATIONS, LEGEND	NOTE 7
L	MIRROR	(REFER TO PROJECT MANUAL)	24" W. x 36" H.	REFER PLANS, ELEVATIONS, LEGEND	
M	TOILET PARTITIONS	(REFER TO PROJECT MANUAL)	(REFER TO PROJECT MANUAL)	REFER PLANS, ELEVATIONS, LEGEND	NOTE 1
N	ACCESSIBLE UNIT DOUBLE ROBE HOOK	(REFER TO PROJECT MANUAL)	(REFER TO PROJECT MANUAL)	48" MAX. A.F.F. TO CENTER	
O	DOUBLE ROBE HOOK	(REFER TO PROJECT MANUAL)	(REFER TO PROJECT MANUAL)	68" A.F.F. TO CENTER	
P	SOAP DISH	(REFER TO PROJECT MANUAL)	(REFER TO PROJECT MANUAL)	48" MAX. A.F.F. TOP OF DISH	
Q	SHOWER CURTAIN ROD	(REFER TO PROJECT MANUAL)	(REFER TO PROJECT MANUAL)	74 1/2" A.F.F. TO CENTER LINE	NOTES 2 & 3
R	FOLD-UP SHOWER SEAT	(REFER TO PROJECT MANUAL)	(REFER TO PROJECT MANUAL)	REFER PLANS, ELEVATIONS, LEGEND	
S	MOP HANGER	(REFER TO PROJECT MANUAL)	(REFER TO PROJECT MANUAL)	TOP OF SHELF 60" A.F.F.	—
T	TRASH CAN (UNDER COUNTER)	(REFER TO PROJECT MANUAL)	—		NOTE 5

ACCESSORY GENERAL NOTES:
1. PHENOLIC OVERHEAD BRACED TOILET PARTITIONS WITH GAP FREE PRIVACY DOORS AND STYLES. THROUGH-BOLTED STAINLESS STEEL HARDWARE IN US32D FINISH. REFER TO FINISH SCHEDULE. ACCESSIBLE STALL DOORS TO BE 32" MINIMUM CLEAR WIDTH PER ADA/ANSI STANDARDS AND NON-ACCESSIBLE STALL DOORS TO BE 24" MINIMUM CLEAR WIDTH.
2. SHOWER CURTAIN TO BE FURNISHED AND INSTALLED BY OWNER.
3. PROVIDE LENGTH REQUIRED FOR UNIT.
4. REFER TO PLUMBING DRAWINGS.
5. OWNER FURNISHED AND CONTRACTOR INSTALLED.
6. REFER TO INTERIOR FINISH PLAN SIGN SCHEDULE FOR ADDITIONAL REQUIREMENTS.
7. "C" FOLD PAPER TOWEL DISPENSER.

ACCESSORY MOUNTING LEGEND

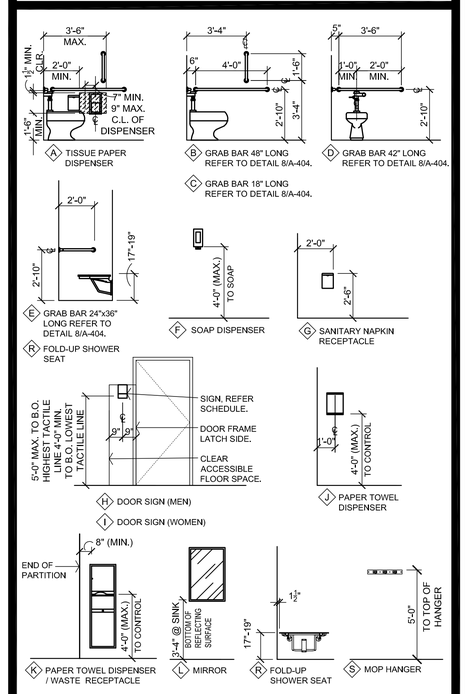

STATE OF MISSOURI
MICHAEL L. KEHOE,
GOVERNOR

David Michael Frohling
A-2010011354

GASKIN HILL NORCROSS OF MISSOURI, INC.
300 South Jefferson Avenue, Suite 301, Springfield, MO 65806
417.869.0719
www.ghnae.com

OFFICE OF
ADMINISTRATION
DIVISION OF FACILITIES
MANAGEMENT, DESIGN
AND CONSTRUCTION

DEPT. OF PUBLIC SAFETY
MISSOURI NATIONAL GUARD
DEPT. OF ADJUTANT GENERAL

CONSTRUCT NEW
44 SOLDIER BARRACKS
BUILDING 757

CAMP CROWDER
TRAINING SITE
890 RAY A CARVER DRIVE
NEOSHO, MISSOURI

PROJECT # T2234-01
SITE # 6260
ASSET # 8136260012

REVISION:
DATE:
REVISION:
DATE:
REVISION:
DATE:
ISSUE DATE: 06/11/2025

CAD DWG FILE: T2234-01-6260-8136260012-A-404
DRAWN BY: DMF
CHECKED BY: XXX
DESIGNED BY: DMF

SHEET TITLE:
ENLARGED PLAN,
INTERIOR ELEVATIONS

SHEET NUMBER:
A-404

16 OF 32 SHEETS
JUNE 11, 2025

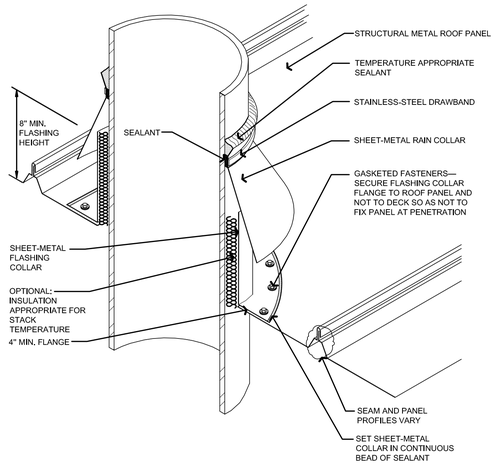

NOTES:

1. NRCA STRONGLY RECOMMENDS PENETRATIONS SHOULD NOT INTERFERE WITH PANEL SEAMS OR OCCUR AT TRANSVERSE SEAMS.
2. VENT STACKS AND OTHER PIPES SHOULD HAVE ADEQUATE CLEARANCE ON ALL SIDES FROM WALLS AND OTHER PROJECTIONS TO FACILITATE PROPER FLASHING AND PANEL DRAINAGE.
3. INSULATION, VAPOR RETARDER AND THERMAL BLOCKS FOR ROOF SYSTEM ARE NOT SHOWN FOR CLARITY.
4. REFER TO THE INTRODUCTION IN CHAPTER 10—CONSTRUCTION DETAILS FOR ADDITIONAL INFORMATION.

SHEET-METAL STACK VENT [HOT OR COLD]

1 A-501 **DETAIL**
NOT TO SCALE

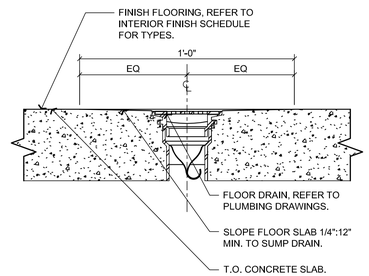

2 A-501 **TYP. FLOOR DRAIN**
3" = 1'-0"

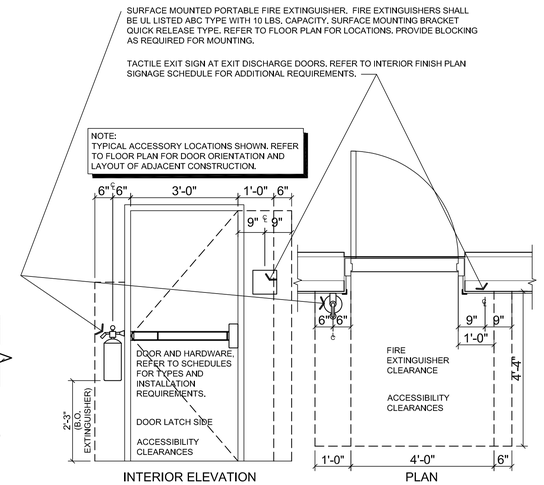

3 A-501 **FIRE EXTINGUISHER DETAIL**
1/2" = 1'-0"

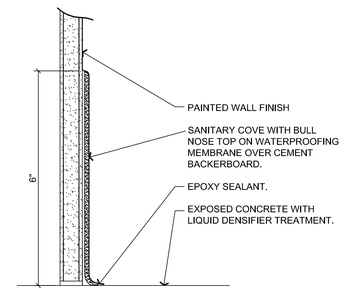

BASE BID:
CONCRETE FLOOR WITH TILE BASE.

4 A-501 **COVE BASE DETAIL**
6" = 1'-0"

STATE OF MISSOURI
MICHAEL L. KEHOE,
GOVERNOR

David Michael Frohling
A-2010011354

GASKIN HILL NORCROSS OF MISSOURI, INC.
300 South Jefferson Avenue, Suite 301, Springfield, MO 65806
417.869.0719
www.ghnae.com

OFFICE OF ADMINISTRATION
DIVISION OF FACILITIES MANAGEMENT, DESIGN AND CONSTRUCTION

DEPT. OF PUBLIC SAFETY
MISSOURI NATIONAL GUARD
DEPT. OF ADJUTANT GENERAL

CONSTRUCT NEW
44 SOLDIER BARRACKS
BUILDING 757

CAMP CROWDER
TRAINING SITE
890 RAY A CARVER DRIVE
NEOSHO, MISSOURI

PROJECT # T2234-01
SITE # 6260
ASSET # 8136260012

REVISION:
DATE:
REVISION:
DATE:
REVISION:
DATE:
ISSUE DATE: 06/11/2025

CAD DWG FILE: T2234-01-6260-8136260012-A-501
DRAWN BY: DMF
CHECKED BY: XXX
DESIGNED BY: DMF

SHEET TITLE:
MISCELLANEOUS DETAILS

SHEET NUMBER:
A-501

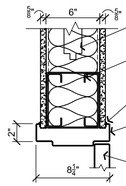

REFER TO FLOOR PLAN AND INTERIOR WALL TYPES FOR CONSTRUCTION.

COLD FORM METAL FRAMING BOX HEADER. REFER TO STRUCTURAL DRAWINGS.

SEALANT BOTH SIDES AROUND PERIMETER, (TYPICAL)

HOLLOW METAL FRAME, REFER DOOR SCHEDULE FOR TYPES. SHIM AND ANCHOR PER MANUFACTURER'S RECOMMENDATIONS.

DOOR, REFER TO DOOR SCHEDULE FOR TYPES.

1 HEAD DETAIL
A-601 1 1/2" = 1'-0"

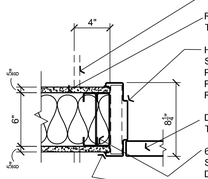

WALL (WHERE OCCURS).

REFER TO FLOOR PLAN AND INTERIOR WALL TYPES FOR CONSTRUCTION.

HOLLOW METAL FRAME, REFER DOOR SCHEDULE FOR TYPES. SHIM AND ANCHOR PER MANUFACTURER'S RECOMMENDATIONS. PROVIDE (3) ANCHORS PER JAMB MIN. WITH REINFORCEMENT AT HARDWARE LOCATIONS.

DOOR, REFER TO DOOR SCHEDULE FOR TYPES.

6" COLD FORM METAL FRAMING DOUBLE STUDS AT JAMBS. REFER TO STRUCTURAL DRAWINGS.

SEALANT BOTH SIDES AROUND PERIMETER, (TYPICAL).

2 JAMB DETAIL
A-601 1 1/2" = 1'-0"

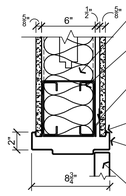

REFER TO FLOOR PLAN AND INTERIOR WALL TYPES FOR CONSTRUCTION.

COLD FORM METAL FRAMING BOX HEADER. REFER TO STRUCTURAL DRAWINGS.

50F125-18 COLD FORM RESILIENT CHANNELS HORIZONTAL AT 24" O.C. ON ONE SIDE WITH OUTSIDE LEG UP.

SEALANT BOTH SIDES AROUND PERIMETER, (TYPICAL)

HOLLOW METAL FRAME, REFER DOOR SCHEDULE FOR TYPES. SHIM AND ANCHOR PER MANUFACTURER'S RECOMMENDATIONS.

DOOR, REFER TO DOOR SCHEDULE FOR TYPES.

3 HEAD DETAIL
A-601 1 1/2" = 1'-0"

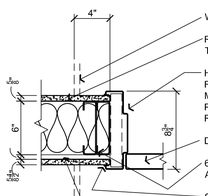

WALL (WHERE OCCURS).

REFER TO FLOOR PLAN AND INTERIOR WALL TYPES FOR CONSTRUCTION.

HOLLOW METAL FRAME, REFER DOOR SCHEDULE FOR TYPES. SHIM AND ANCHOR PER MANUFACTURER'S RECOMMENDATIONS. PROVIDE (3) ANCHORS PER JAMB MIN. WITH REINFORCEMENT AT HARDWARE LOCATIONS.

DOOR, REFER TO DOOR SCHEDULE FOR TYPES.

6" COLD FORM METAL FRAMING DOUBLE STUDS AT JAMBS. REFER TO STRUCTURAL DRAWINGS.

SEALANT BOTH SIDES AROUND PERIMETER, (TYPICAL).

50F125-18 COLD FORM RESILIENT CHANNELS HORIZONTAL AT 24" O.C. ON ONE SIDE WITH OUTSIDE LEG UP.

4 JAMB DETAIL
A-601 1 1/2" = 1'-0"

DOOR SCHEDULE

MARK	DOOR					HARDWARE		FRAME			DETAILS			FIRE RATING	REMARKS (REFER NOTES)
	SIZE (W x H x D)	TYPE	SWING	MATERIAL	GLAZ. TYPE	SET #	KEYED	TYPE	MATERIAL	HEAD WIDTH	HEAD	JAMB	SILL		
100A	3'-0" X 7'-0" X 1 3/4"	B	LHR	HOL. METAL	—	4	LEVEL 2	3	HOL. METAL	—	1/A-601	2/A-601	8/A-401 SIMILAR	20 MIN.	1, 2
101A	(PAIR) 3'-0" X 7'-0" X 1 3/4"	CC	RHR/LHR	HOL. METAL	1	1	LEVEL 1	1	HOL. METAL	—	6/A-401	7/A-401	8/A-401	—	1, 2
102A	3'-0" X 7'-0" X 1 3/4"	B	RH	HOL. METAL	—	4	LEVEL 3	3	HOL. METAL	—	1/A-601	2/A-601	-	20 MIN.	1, 2
103A	3'-0" X 7'-0" X 1 3/4"	B	LHR	HOL. METAL	—	5	—	2	HOL. METAL	—	3/A-601	4/A-601	-	20 MIN.	1, 2
103B	3'-0" X 7'-0" X 1 3/4"	A	LHR	HOL. METAL	—	2	LEVEL 1	1	HOL. METAL	—	6/A-401	7/A-401	8/A-401	—	1, 2
103C	3'-0" X 7'-0" X 1 3/4"	B	RHR	HOL. METAL	—	5	—	2	HOL. METAL	—	3/A-601	4/A-601	-	20 MIN.	1, 2
104A	3'-0" X 7'-0" X 1 3/4"	A	LHR	HOL. METAL	—	3	LEVEL 3	1	HOL. METAL	—	6/A-401 SIMILAR	7/A-401 SIMILAR	8/A-401	—	1, 2
105A	3'-0" X 7'-0" X 1 3/4"	B	LHR	HOL. METAL	—	5	—	2	HOL. METAL	—	3/A-601	4/A-601	-	20 MIN.	1, 2
105B	3'-0" X 7'-0" X 1 3/4"	A	RHR	HOL. METAL	—	2	LEVEL 1	1	HOL. METAL	—	6/A-401	7/A-401	8/A-401	—	1, 2
105C	3'-0" X 7'-0" X 1 3/4"	B	RHR	HOL. METAL	—	5	—	2	HOL. METAL	—	3/A-601	4/A-601	-	20 MIN.	1, 2
106A	3'-0" X 7'-0" X 1 3/4"	B	RHR	HOL. METAL	—	5	—	2	HOL. METAL	—	3/A-601	4/A-601	-	20 MIN.	1, 2
106B	3'-0" X 7'-0" X 1 3/4"	B	LHR	HOL. METAL	—	5	—	2	HOL. METAL	—	3/A-601	4/A-601	-	20 MIN.	1, 2
106C	3'-0" X 7'-0" X 1 3/4"	A	RHR	HOL. METAL	—	2	LEVEL 1	1	HOL. METAL	—	6/A-401	7/A-401	8/A-401	—	1, 2

NOTES:
1. ALL DOORS SHALL BE SHOP PREPARED FOR HARDWARE.
2. REFER TO HARDWARE NOTES FOR ADDITIONAL REQUIREMENTS.

DOOR TYPES

SCALE: 1/4" = 1'-0"

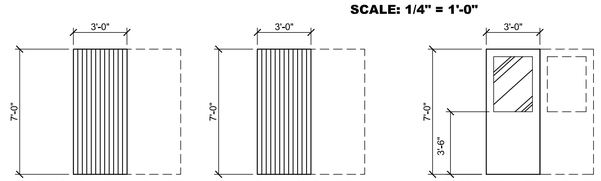

FLUSH HOLLOW METAL (INSULATED)

FLUSH HOLLOW METAL (WITHOUT INSULATION).

HALF LITE HOLLOW METAL (INSULATED) ENTRANCE W/ INSULATED SAFETY GLASS (REFER SCHEDULES FOR GLAZING TYPES).

A A

NOTE:
DASHED IN DOOR AND DOUBLE LETTER INDICATE PAIRED DOOR LOCATIONS.

B B

C C

WINDOW SCHEDULE

SCALE: 1/4" = 1'-0"

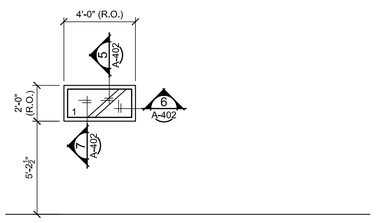

A ALUMINUM ENTRANCE AND STOREFRONT (FIXED) FRAMING SYSTEM, THERMALLY BROKEN (2" X 4 1/2") SYSTEM (FRAME TYPE 4). PROVIDE SPECIFIED BLINDS AT EACH WINDOW.

FRAME TYPES

SCALE: 3" = 1'-0"

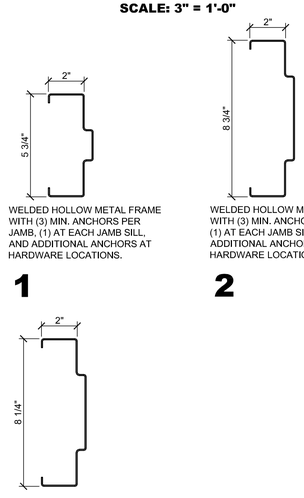

WELDED HOLLOW METAL FRAME WITH (3) MIN. ANCHORS PER JAMB, (1) AT EACH JAMB SILL, AND ADDITIONAL ANCHORS AT HARDWARE LOCATIONS.

1

WELDED HOLLOW METAL FRAME WITH (3) MIN. ANCHORS PER JAMB, (1) AT EACH JAMB SILL, AND ADDITIONAL ANCHORS AT HARDWARE LOCATIONS.

2

WELDED HOLLOW METAL FRAME WITH (3) MIN. ANCHORS PER JAMB, (1) AT EACH JAMB SILL, AND ADDITIONAL ANCHORS AT HARDWARE LOCATIONS.

3

HARDWARE SCHEDULE

SET NO. 1 (DOOR: 101A)
2 CONTINUOUS GEARED HINGES **(H1)**
2 EXTERIOR CYLINDERS WITH REMOVABLE CORES
2 (ANSI FUNCTION NO. 08) ENTRY LOCK AND EXIT PANIC WITH TWO POINT LOCKING SURFACE VERTICAL RODS, COVER GUARDS, DUST PROOF BOTTOM STRIKES, EXTERIOR LEVER HANDLES WITH ESCUTCHEON TRIM, THRU-BOLT MOUNTED **(L1 & E1)**
2 CLOSERS WITH COVER, PARALLEL ARM, HOLD OPEN WITH SPRING CUSH, ACCESSORY PLATES AND SPACERS (AS REQUIRED), THRU-BOLT MOUNTED **(C1)**
2 KICK PLATES (0.062T X 30"H X 2" L.D.W.) **(K2)**
2 SET WEATHER SEAL PERIMETER GASKETS **(W1)**
1 SET WEATHER SEAL MEETING STILE GASKETS **(W1)**
2 WEATHER SEAL DOOR BOTTOM SWEEPS **(W1)**
2 THRESHOLD (ADA / ANSI COMPLIANT) **(T1)**
1 RAIN DRIP **(D1)**

SET NO. 2 (DOORS: 103B, 105B, 106C)
1 CONTINUOUS GEARED HINGE **(H1)**
1 EXTERIOR CYLINDER REMOVABLE CORE
1 (ANSI FUNCTION NO. 03) MORTIS ENTRY LOCK AND EXIT PANIC, EXTERIOR LEVER HANDLE WITH ESCUTCHEON TRIM, THRU-BOLT MOUNTED **(L1 & E1)**
1 CLOSER WITH COVER, PARALLEL ARM, HOLD OPEN WITH SPRING CUSH, THRU-BOLT MOUNTED **(C1)**
1 KICK PLATE (0.062T X 30"H X 2" L.D.W.) **(K2)**
1 SET WEATHER SEAL PERIMETER GASKETS **(W1)**
1 WEATHER SEAL DOOR BOTTOM SWEEP **(W1)**
1 THRESHOLD (ADA / ANSI COMPLIANT) **(T1)**
1 RAIN DRIP **(D1)**

SET NO. 3 (DOOR: 104A)
1 CONTINUOUS GEARED HINGE **(H1)**
1 EXTERIOR CYLINDER REMOVABLE CORE
1 (ANSI FUNCTION NO. F04) MORTIS ENTRY LOCK WITH LEVER HANDLES AND ESCUTCHEON TRIM **(L1)**
1 CLOSER WITH COVER, PARALLEL ARM, SPRING CUSH, THRU-BOLT MOUNTED **(C1)**
1 KICK PLATE (0.062T X 12"H X 2" L.D.W.) **(K1)**
1 SET WEATHER SEAL PERIMETER GASKETS **(W1)**
1 WEATHER SEAL DOOR BOTTOM SWEEP **(W1)**
1 THRESHOLD (ADA / ANSI COMPLIANT) **(T1)**
1 RAIN DRIP **(D1)**

SET NO. 4 (DOORS: 100A AND 102A)
3 BALL BEARING HINGES **(H2)**
1 (ANSI FUNCTION NO. F86) STOREROOM LOCK WITH LEVER HANDLES **(L2)**
1 CLOSER WITH COVER, PARALLEL ARM, SPRING CUSH STOP, THRU-BOLT MOUNTED **(C1)**
1 SET SMOKE SEAL PERIMETER GASKETS **(PS1)**
1 SMOKE SEAL DOOR BOTTOM SWEEP **(W1)**

SET NO. 5 (DOORS: 103A, 103C, 105A, 105C, 106A, AND 106B)
3 BALL BEARING HINGES **(H2)**
1 (ANSI FUNCTION NO. F75) PASSAGE LATCH WITH LEVER HANDLES **(L3)**
1 CLOSER WITH COVER, PARALLEL ARM, SPRING CUSH STOP, THRU-BOLT MOUNTED **(C1)**
1 KICK PLATE (0.062T X 12"H X 2" L.D.W.) **(K1)**
1 SET SMOKE SEAL PERIMETER GASKETS **(PS1)**
1 SMOKE SEAL DOOR BOTTOM SWEEP **(W1)**

GENERAL NOTES

A REFER TO PROJECT MANUAL FOR ADDITIONAL REQUIREMENTS.

B REFER TO BUILDING CODE SUMMARY AND STRUCTURAL DRAWINGS FOR PROJECT STRUCTURAL DESIGN CRITERIA. SUBMITTALS SHALL INCLUDE MANUFACTURER'S REQUIREMENTS FOR ANCHOR TYPES, SPACING, AND LOCATIONS REQUIRED FOR PROJECT CONDITIONS.

C DIMENSIONS TO ROUGH FACE OF OPENING UNLESS OTHERWISE INDICATED. FIELD VERIFY FINAL ROUGH OPENING DIMENSIONS PRIOR TO OPENING ASSEMBLY FABRICATION.

D WINDOW TYPE ELEVATIONS SHOWN VIEWED FROM EXTERIOR SIDE.

E REFER TO EXTERIOR FINISH SCHEDULE AND INTERIOR FINISH PLAN FOR ADDITIONAL REQUIREMENTS.

HARDWARE NOTES

HARDWARE NOTES:
1. ALL HARDWARE TO BE ADA AND ANSI A117.1 COMPLIANT. CLOSURE SPEEDS SHALL BE ADJUSTED SO THAT FROM AN OPEN POSITION OF 90 DEGREES, THE TIME REQUIRED TO MOVE THE DOOR TO AN OPEN POSITION OF 12 DEGREES SHALL BE 5 SECONDS MINIMUM. DOOR OPENING FORCE FOR PUSHING OR PULLING OPEN DOORS, OTHER THAN FIRE DOORS, SHALL BE AS FOLLOWS:
- INTERIOR HINGED DOORS: 5.0 POUNDS MAXIMUM.

2. VERIFY COMPATIBILITY OF HARDWARE SPECIFIED. NOTIFY ARCHITECT OF INCOMPATIBILITY ISSUES PRIOR TO ORDERING AND INSTALLATION.

3. ALL HARDWARE TO BE GRADE 1 (HEAVY DUTY COMMERCIAL).

4. ALL KEYED HARDWARE TO BE COMPATIBLE WITH OWNER'S KEYING (BEST 7 PIN) SYSTEM. ALL EXTERIOR DOORS TO BE KEYED ALIKE. ALL HARDWARE CONTRACTOR FURNISHED AND INSTALLED. COORDINATE ORDERING AND DELIVERY REQUIREMENTS WITH OWNER. SUBMIT CORE SCHEDULE AS SPECIFIED TO:

MISSOURI NATIONAL GUARD
ATTN: JEREMY NEWTON, DESIGN PROJECT MANAGER
6819 N. BOUNDARY ROAD
JEFFERSON CITY, MO 65101
OFFICE: (573) 638-9500 ext. 37484
CELL: (573) 308-6894
EMAIL: jeremy.l.newton.nfg@army.mil

5. FILL HOLLOW METAL FRAMES WITH BATT INSULATION.

KEYING LEGEND

LEVEL 1:
UPGRADED SECURITY: PERIMETER ENTRANCE

LEVEL 2:
BASIC SECURITY: OFFICE, GENERAL STORAGE

LEVEL 3:
BASIC SECURITY: MAINTENANCE, MECHANICAL / ELECTRICAL, JANITOR

GLAZING SCHEDULE

TYPE 1:
1" INSULATED SAFETY (FULLY TEMPERED) GLAZING: (REFER TO PROJECT MANUAL SECTION 08 80 00 GLAZING FOR ADDITIONAL REQUIREMENTS).

EXTERIOR PANE: 1/4" TINTED (SOLARGRAY) (2) SURFACE (LOW-E), HEAT-TREATED (FT)
AIR CAVITY: 1/2"
INTERIOR PANE: 1/4" CLEAR, HEAT-TREATED (FT)

PERFORMANCE REQUIREMENTS:
VISIBLE LIGHT TRANSMITTANCE (VLT): 35
VISIBLE LIGHT REFLECTANCE (EXTERIOR %): 7
VISIBLE LIGHT REFLECTANCE (INTERIOR %): 10
(NFRC) U-VALUE (WINTER NIGHTTIME): 0.29
SOLAR HEAT GAIN COEFFICIENT (SHGC): 0.25
LIGHT TO SOLAR GAIN (LSG): 1.65

STATE OF MISSOURI
MICHAEL L. KEHOE,
GOVERNOR

David Michael Frohling
A-2010011354

GASKIN HILL NORCROSS OF MISSOURI, INC.
300 South Jefferson Avenue, Suite 301, Springfield, MO 65806
417.869.0719
www.ghnae.com

OFFICE OF
ADMINISTRATION
DIVISION OF FACILITIES
MANAGEMENT, DESIGN
AND CONSTRUCTION

DEPT. OF PUBLIC SAFETY
MISSOURI NATIONAL GUARD
DEPT. OF ADJUTANT GENERAL

CONSTRUCT NEW
44 SOLDIER BARRACKS
BUILDING 757

CAMP CROWDER
TRAINING SITE
890 RAY A CARVER DRIVE
NEOSHO, MISSOURI

PROJECT # T2234-01
SITE # 6260
ASSET # 8136260012

REVISION:
DATE:
REVISION:
DATE:
REVISION:
DATE:
ISSUE DATE: 06/11/2025

CAD DWG FILE: T2234-01-6260-8136260012-A-601
DRAWN BY: DMF
CHECKED BY: XXX
DESIGNED BY: DMF

SHEET TITLE:
DOOR AND WINDOW SCHEDULES

SHEET NUMBER:
A-601

JUNE 11, 2025

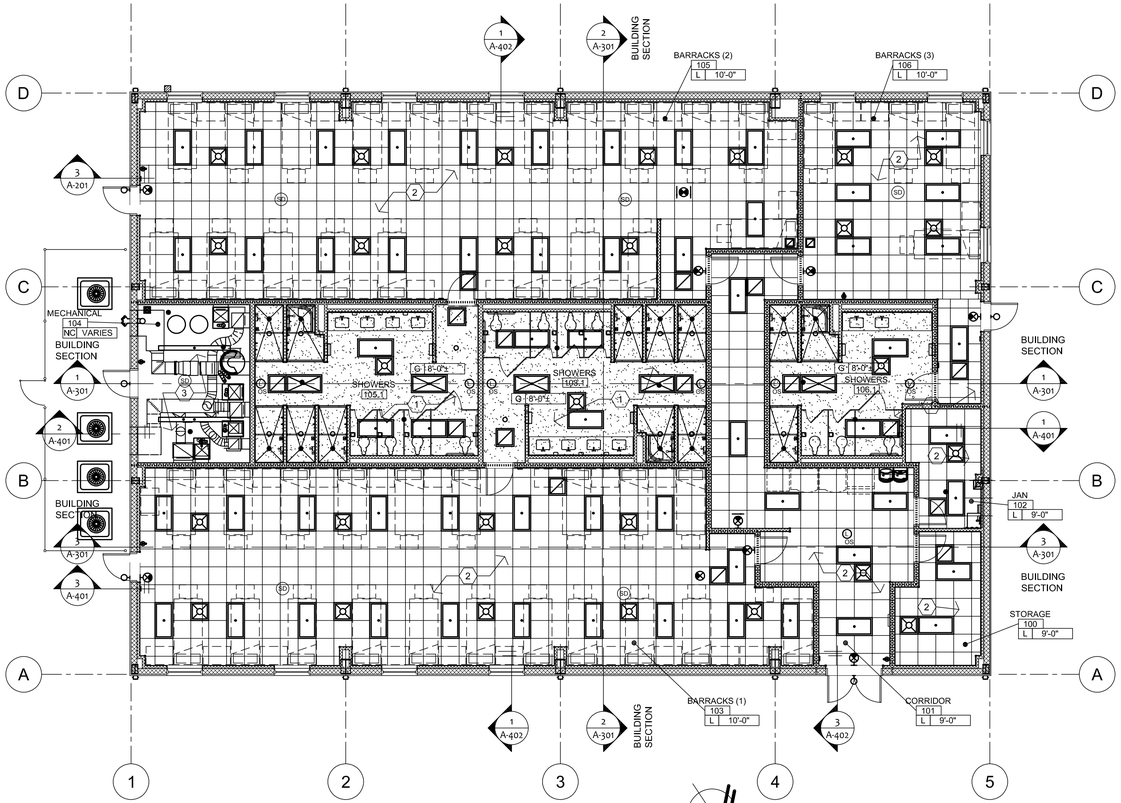

1 A-701 REFLECTED CEILING PLAN
1/8" = 1'-0"

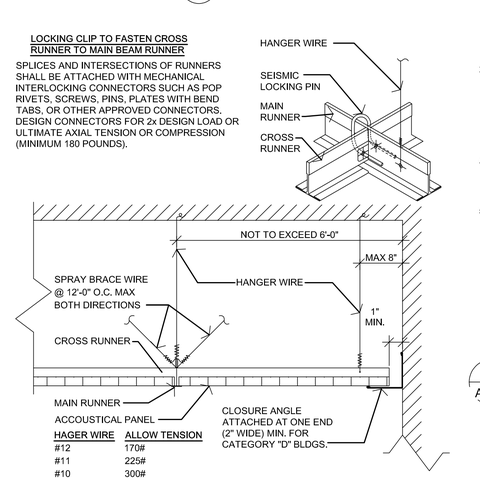

2 A-701 SUSP. CLG. SEISMIC DETAIL
NOT TO SCALE

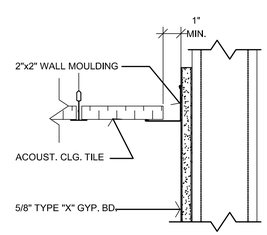

SPECIAL NOTE:
REFER TO SHEET G-101 FOR PROJECT SEISMIC DESIGN CATEGORY TO DETERMINE INSTALLATION REQUIREMENTS.

3 A-701 SUSP. CLG. PERM. DETAIL
3" = 1'-0"

GENERAL NOTES

- (A) REFER TO PROJECT MANUAL FOR ADDITIONAL REQUIREMENTS.
- (B) REFER TO INTERIOR WALL AND CEILING GENERAL NOTES FOR ADDITIONAL REQUIREMENTS.
- (C) MECHANICAL REGISTERS ARE SHOWN ON THIS DRAWING FOR THE ARCHITECTURAL LOCATIONS ONLY. REFER TO THE MECHANICAL DRAWINGS FOR TYPES, SIZES, DISTRIBUTION, CONNECTIONS, AND ALL OTHER REQUIREMENTS.
- (D) LIGHTING FIXTURES ARE SHOWN ON THIS DRAWING FOR THE ARCHITECTURAL LOCATIONS, QUANTITIES, AND GENERAL FIXTURE TYPE ONLY. SEE THE ELECTRICAL DRAWINGS FOR EXACT FIXTURE TYPE AND CIRCUITING.
- (E) CONTRACTOR SHALL COORDINATE THE INSTALLATION OF THE VARIOUS TRADE ITEMS WITHIN THE SPACE ABOVE ALL CEILINGS (INCLUDING, BUT NOT LIMITED TO: STRUCTURAL MEMBERS, MECHANICAL DUCTS AND INSULATION, CONDUITS, RACEWAYS, SPRINKLER SYSTEM, LIGHT FIXTURES, CEILING SYSTEMS, AND ANY SPECIAL STRUCTURAL SUPPORTS REQUIRED) AND SHALL BE RESPONSIBLE FOR MAINTAINING THE FINISH CEILING HEIGHT ABOVE THE FINISH FLOOR INDICATED ON THE DRAWING.
- (F) CONTRACTOR TO SUBMIT FIRE SUPPRESSION HEAD LOCATIONS SHOWING COORDINATION WITH REFLECTED CEILING MECHANICAL AND ELECTRICAL SYSTEMS. CENTER HEADS IN TILES.
- (G) REFER TO INTERIOR FINISH PLAN FOR CEILING FINISHES.
- (H) PROVIDE SUSPENDED ACOUSTICAL CEILING TILE HOLD DOWN CLIPS AT AREAS SUBJECT TO UPLIFT. EXTEND 8'-0" MINIMUM INTO INTERIOR AT EXTERIOR DOOR LOCATIONS
- (I) INDICATED CEILING ELEVATIONS TO BOTTOM OF FRAMING AT GYPSUM BOARD CONSTRUCTION AND BOTTOM OF SUSPENDED ACOUSTICAL CEILING GRID CONSTRUCTION, UNLESS OTHERWISE NOTED.
- (J) PROVIDE SUSPENDED CEILING SEISMIC BRACING, REFER TO DETAILS 2/A-701 AND 3/A-701.
- (K) COORDINATE ATTACHMENT REQUIREMENTS TO PRE-ENGINEERED METAL BUILDING STRUCTURE WITH MANUFACTURER.
- (L) EXPOSED MECHANICAL, ELECTRICAL AND FIRE SUPPRESSION SYSTEMS TO BE INSTALLED IN NEAT AND ORDERLY LAYOUT. PROVIDE FRAMING, SUPPORTS AND ATTACHMENTS AS REQUIRED FOR COMPLETE INSTALLATION.

KEY NOTES

- (1) 5/8" GYPSUM BOARD ON SUSPENDED DRYWALL GRID. REFER TO INTERIOR FINISH PLAN FOR ADDITIONAL REQUIREMENTS.
- (2) SUSPENDED ACOUSTICAL CEILING SYSTEM, REFER TO INTERIOR FINISH PLANS FOR FINISHES.
- (3) EXPOSED UNFINISHED STRUCTURE, MECHANICAL AND ELECTRICAL SYSTEMS.

SYMBOLS LEGEND

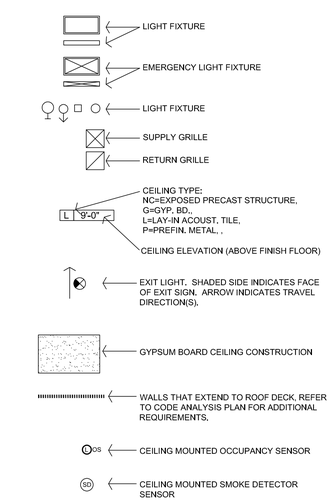

STATE OF MISSOURI
MICHAEL L. KEHOE,
GOVERNOR

David Michael Frohling
A-2010011354

GASKIN HILL NORCROSS OF MISSOURI, INC.
300 South Jefferson Avenue, Suite 301, Springfield, MO 65806
417.869.0719
www.ghnae.com

OFFICE OF ADMINISTRATION
DIVISION OF FACILITIES MANAGEMENT, DESIGN AND CONSTRUCTION

DEPT. OF PUBLIC SAFETY
MISSOURI NATIONAL GUARD
DEPT. OF ADJUTANT GENERAL

CONSTRUCT NEW
44 SOLDIER BARRACKS
BUILDING 757

CAMP CROWDER
TRAINING SITE
890 RAY A CARVER DRIVE
NEOSHO, MISSOURI

PROJECT # T2234-01
SITE # 6260
ASSET # 8136260012

REVISION:
DATE:
REVISION:
DATE:
REVISION:
DATE:
ISSUE DATE: 06/11/2025

CAD DWG FILE: T2234-01-6260-8136260012-A-701
DRAWN BY: DMF
CHECKED BY: XXX
DESIGNED BY: DMF

SHEET TITLE:
REFLECTED CEILING PLAN

SHEET NUMBER:
A-701

19 OF 32 SHEETS
JUNE 11, 2025

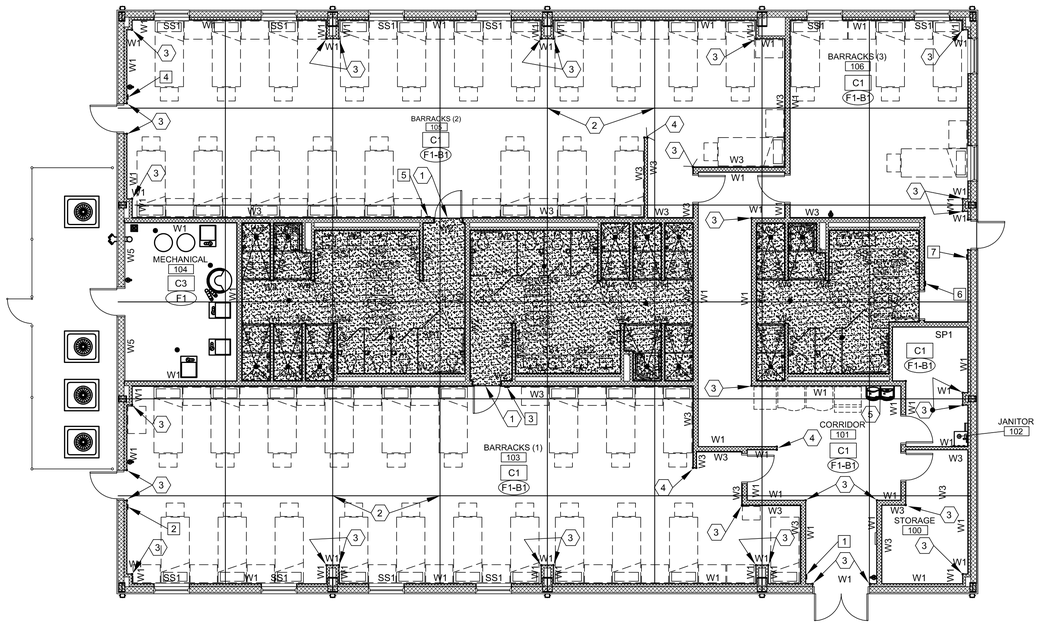

1 I-101 INTERIOR FINISH PLAN
1/8" = 1'-0"

NORTH

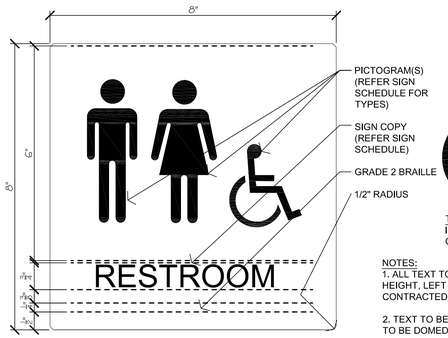

NOTES:
1. ALL TEXT TO BE UPPERCASE HELVETICA BOLD, 5/8" CAPITAL LETTER HEIGHT, LEFT ALIGNED WITH ACCOMPANYING BRAILLE (GRADE 2 CONTRACTED).

2. TEXT TO BE RAISED 1/32" BRAILLE (GRADE 2 CONTRACTED). TO BE DOMED.

3. PICTOGRAMS ILLUSTRATED FOR GRAPHIC PROPORTIONS ONLY. REFER TO SIGN TYPE FOR PICTOGRAM HEIGHTS REQUIRED.

2 I-101 PICTOGRAM SIGNS
6" = 1'-0"

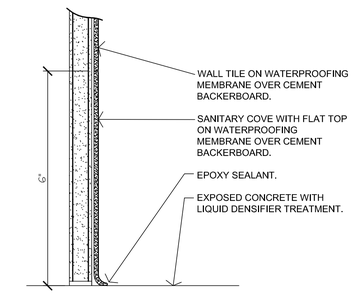

BASE BID:
CONCRETE FLOOR WITH TILE BASE.

3 I-101 COVE BASE DETAIL
6" = 1'-0"

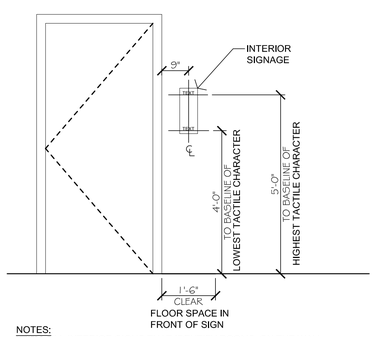

NOTES:
1. INSTALL INTERIOR SIGNS THAT IDENTIFY ROOMS ON THE WALL ADJACENT TO THE LATCH SIDE OF THE DOOR. IF THERE IS NOT ADEQUATE SPACE ADJACENT TO THE LATCH SIDE OF THE DOOR ON THE WALL, MOUNT THE SIGN ON THE DOOR. CENTER THE SIGN ALONG THE WIDTH OF THE DOOR AND MOUNT AS THE SAME HEIGHTS AS INDICATED ABOVE.

2. MOUNT WITH CONCEALED ANCHORS, PER MANUFACTURER'S STANDARD METHOD FOR SUBSTRATE, SIGN PANEL SHALL REMAIN FLAT UNDER INSTALLED CONDITIONS AS INDICATED AND WITHIN A TOLERANCE OF +/- 1/16" MEASURED DIAGONALLY FROM CORNER TO CORNER.

4 I-101 TYP. SIGN MOUNTING
1/2" = 1'-0"

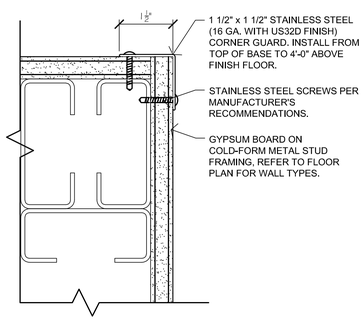

5 I-101 CORNER GUARD
6" = 1'-0"

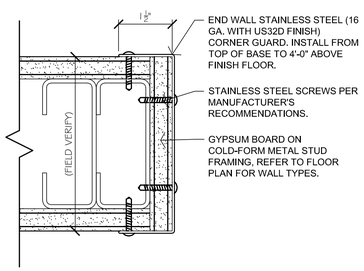

6 I-101 CORNER GUARD
6" = 1'-0"

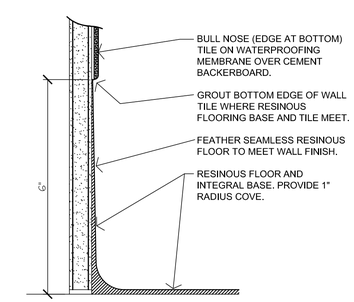

ALTERNATE NO. 2:
RESINOUS FLOORING AND BASE.

7 I-101 COVE BASE DETAIL
6" = 1'-0"

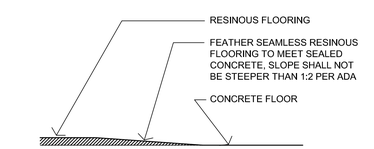

ALTERNATE NO. 2:
RESINOUS FLOORING AND BASE.

8 I-101 FLOOR TRANSITION
6" = 1'-0"

INTERIOR FINISH TYPES

FLOORS

F1
TYPE: EXPOSED CONCRETE WITH LIQUID DENSIFIER TREATMENT
MFG: (REFER PROJECT MANUAL)
COLOR: CLEAR

AF2
BASE BID: PROVIDE FLOOR FINISH TYPE "F1".
ALTERNATE NO. 2:
TYPE: RESINOUS FLOORING (SEAMLESS)
MFG: "DUR-A-FLEX" - DUR-A-CHIP (BASIS FOR DESIGN)
COLOR: COBBLESTONE (GRAY WITH BLACK, GRAY, BEIGE AND WHITE FLAKES)
FINISH: MACRO / COURSE (NON-SLIP)

BASE

B1
TYPE: RESILIENT BASE
MFG: JOHNSONITE OR EQUAL (BASIS FOR DESIGN)
MATERIAL: RUBBER
COLOR: 40 BLACK
SIZE: 6" (TYPE TS)

B2
TYPE: TILE BASE
MFG: DAL-TILE OR EQUAL (BASIS FOR DESIGN)
SERIES: COLOR WHEEL COLLECTION - CLASSIC
COLOR: MATTE DESERT GRAY X714 (OR EQUAL)
SIZE: 6" X 6" SANITARY COVE WITH BULLNOSE TOP OR FLAT TOP, REFER TO DETAILS 4/A-501 & 3/I-101.
NOTE: PROVIDE SPECIAL SHAPES FOR INSIDE CORNER, OUTSIDE CORNER, AND FINISH TYPE TRANSITIONS.

BASE BID: PROVIDE BASE FINISH TYPE "B2".
ALTERNATE NO. 2:
TYPE: RESINOUS FLOORING (SEAMLESS)
AB3
MFG: "DUR-A-FLEX" - DUR-A-CHIP (BASIS FOR DESIGN)
COLOR: COBBLESTONE (GRAY WITH BLACK, GRAY, BEIGE AND WHITE FLAKES)
FINISH: MACRO / COURSE (NON-SLIP)
SIZE: EXTEND UP WALL INTEGRAL WITH FLOORING 6", REFER TO DETAIL 7/I-101.

WALLS

W1
TYPE: GYPSUM BOARD
FINISH: PAINT (FIELD)
MFG: SHERWIN WILLIAMS OR EQUAL (BASIS FOR DESIGN)
COLOR: SW 7029 (AGREEABLE GRAY)
SHEEN: SEMI-GLOSS

W2
TYPE: GYPSUM BOARD
FINISH: PAINT (FIELD)
MFG: SHERWIN WILLIAMS OR EQUAL (BASIS FOR DESIGN)
COLOR: SW 7029 (AGREEABLE GRAY) (MOLD AND MILDEW RESISTANT)
SHEEN: SEMI-GLOSS

W3
TYPE: GYPSUM BOARD
FINISH: PAINT (ACCENT)
MFG: SHERWIN WILLIAMS OR EQUAL (BASIS FOR DESIGN)
COLOR: SW 6425 (RELENTLESS OLIVE)
SHEEN: SEMI-GLOSS

W4
TYPE: GLAZED CERAMIC TILE
MFG: DAL-TILE OR EQUAL (BASIS FOR DESIGN)
SERIES: COLOR WHEEL COLLECTION - CLASSIC
SIZE: 6" X 6"
COLOR: MATTE ARCTIC WHITE 0790 (1) (OR EQUAL)
PATTERN: STACKED
MFG: MAPEI (BASIS FOR DESIGN)
GROUT: KERAPOXY CQ (BASIS FOR DESIGN)
COLOR: 38 AVALANCHE (OR EQUAL)
NOTE: PROVIDE SPECIAL SHAPES FOR INSIDE CORNERS, OUTSIDE CORNERS, AND EDGE FINISH TRANSITIONS.

W5
TYPE: PRE-ENGINEERED METAL BUILDING LINER PANEL
MFG: CHIEF BUILDINGS OR EQUAL (BASIS FOR DESIGN)
STYLE: CHIEF CS/AP PANEL WALL SYSTEM
COLOR: FROST WHITE (FW)

CEILINGS

C1
TYPE: SUSPENDED ACOUSTICAL CEILING
MFG: ARMSTRONG OR EQUAL (BASIS FOR DESIGN)
STYLE: DUNE
ITEM NO.: 1774
SIZE: 24"X24"X5/8"
EDGE: ANGLED TEGULAR
COLOR: WHITE
GRID: ALUMINUM 15/16" EXPOSED TEE
COLOR: WHITE

C2
TYPE: GYPSUM BOARD ON SUSPENDED GRID
TEXTURE: LEVEL 5 SMOOTH DRYWALL SURFACE
FINISH: PAINT
MFG: SHERWIN WILLIAMS OR EQUAL (BASIS FOR DESIGN)
COLOR: SW 7029 (AGREEABLE GRAY) (MOLD AND MILDEW RESISTANT)
SHEEN: SEMI-GLOSS

C3
TYPE: EXPOSED STRUCTURE
FINISH: UNFINISHED

DOORS AND FRAMES

D1
TYPE: INTERIOR SURFACES HOLLOW METAL DOORS & FRAMES
FINISH: PAINT
MFG: SHERWIN WILLIAMS OR EQUAL (BASIS FOR DESIGN)
COLOR: SW 6991 (BLACK MAGIC)
SHEEN: SEMI-GLOSS

D2
TYPE: EXTERIOR SURFACES DOORS & FRAMES
MFG: SHERWIN WILLIAMS OR EQUAL (BASIS FOR DESIGN)
COLOR: (MATCH EXTERIOR SHEET METAL COLOR)
SHEEN: GLOSS

SOLID SURFACE FABRICATIONS

SS1
TYPE: SOLID SURFACE MILLWORK AND WINDOW SILLS
MFG: WILSONART OR EQUAL (BASIS FOR DESIGN)
COLOR: MIDNIGHT FROST 9244SS
LAVATORY: WILSONART "AV1812" OR EQUAL (BASIS FOR DESIGN)

SPECIALTIES

SP1
TYPE: TOILET COMPARTMENTS
MFG: ASI - ACCURATE PARTITIONS OR EQUAL (BASIS FOR DESIGN)
COLOR: GRAPHITE GRAFIX 3020 (BLACK CORE)

SP2
TYPE: METAL SUPPORT BRACKETS AT LAVATORY LOCATIONS
FINISH: PAINT
MFG: SHERWIN WILLIAMS OR EQUAL (BASIS FOR DESIGN)
COLOR: SW 6991 (BLACK MAGIC) (MATCH "D1")
SHEEN: SEMI-GLOSS

GENERAL NOTES

A. REFER TO PROJECT MANUAL FOR ADDITIONAL REQUIREMENTS.

B. FINAL COLORS AND TEXTURES TO BE SELECTED BY OWNER FROM MANUFACTURER'S SPECIFIED SAMPLES.

C. PROVIDE FLOORING TRANSITIONS, REDUCERS AND EDGING AS REQUIRED FOR SPECIFIC CONDITIONS.

D. REFER TO EXTERIOR FINISH SCHEDULE FOR ADDITIONAL REQUIREMENTS.

E. REFER TO ELEVATIONS, SECTIONS, AND DETAILS FOR ADDITIONAL REQUIREMENTS.

F. REFER TO REFLECTED CEILING PLAN FOR ADDITIONAL REQUIREMENTS.

G. GYPSUM BOARD FINISH TEXTURE TO BE SMOOTH FINISH ON "LEVEL 5" SURFACE. FINAL TEXTURES TO BE SELECTED BY OWNER FROM SPECIFIED SAMPLES.

H. ALL GYPSUM BOARD EXPOSED WALLS TO BE FINISH TYPE "W1" UNLESS OTHERWISE INDICATED.

I. ALL GYPSUM BOARD EXPOSED WALLS TO BE PROVIDED WITH BASE FINISH TYPE "B1" UNLESS OTHERWISE INDICATED.

J. ALL SHOWER ENCLOSURE WALLS TO BE FINISH TYPE "W4" UNLESS OTHERWISE INDICATED.

K. ALL INTERIOR STEEL DOORS AND FRAMES TO BE FINISH TYPE "D1" UNLESS OTHERWISE INDICATED. ALL EXTERIOR STEEL DOORS AND FRAMES TO BE FINISH TYPE "D1" ON INTERIOR SIDE AND FINISH TYPE "D2" ON EXTERIOR SIDE OF DOOR.

L. ALL TOILET COMPARTMENTS TO BE FINISH TYPE "SP1".

M. ALL MILLWORK AND WINDOW SILL SOLID SURFACE FABRICATIONS TO BE FINISH TYPE "SS1", UNLESS OTHERWISE INDICATED.

N. PROVIDE SEALANT AT ALL EXPOSED CONCRETE FLOOR JOINTS. COLOR TO MATCH NATURAL CONCRETE GRAY.

O. ALL ELECTRICAL DEVICES TO BE BLACK FINISH AND COVER PLATES TO BE STAINLESS STEEL FINISH, UNLESS OTHERWISE INDICATED.

P. ALL WINDOW OPENINGS TO BE PROVIDED WITH WINDOW BLINDS. COLOR TO MATCH WINDOW FRAME.

Q. ALL METAL SUPPORT BRACKETS FOR MILLWORK TO BE PAINTED "SP2", UNLESS OTHERWISE INDICATED.

KEY NOTES

1. RESIN FLOORING TO CONCRETE FLOOR FINISH TRANSITION, REFER TO DETAIL 8/I-101 (ALTERNATE NO. 3).
2. CONCRETE FLOOR JOINTS, REFER TO STRUCTURAL. PROVIDE SEALANT AT ALL EXPOSED LOCATIONS.
3. CORNER GUARD, REFER TO DETAIL 5/I-101.
4. WALL END CORNER GUARD, REFER TO DETAIL 6/I-101.
5. DRINKING FOUNTAIN STAINLESS STEEL (24 GA. WITH US32D FINISH) WALL COVERING WITH EXPOSED EDGES BEVELED, REFER TO INTERIOR ELEVATIONS.
6. TILE TO PAINT WALL FINISH TRANSITION.

SIGNAGE GENERAL NOTES

A. CONFIRM ALL ROOM SIGNAGE COPY WITH OWNER.

B. FOR TYPICAL SIGN MOUNTING HEIGHT REFER TO DETAIL 4/I-101.

C. SIGN DIMENSIONS SHOWN REFLECT FACE PLATE ONLY.

D. THE MOUNTING LOCATION OF INTERIOR SIGNS SHOULD BE ARRANGED SO THAT A PERSON CAN APPROACH WITHIN 3" OF SIGN WITHOUT ENCOUNTERING PROTRUDING OBJECTS OR A DOOR SWING.

E. SIGNAGE COLORS TO BE WHITE TEXT AND SYMBOLS ON BLUE (NO. 15090 IN FEDERAL STANDARD 595B) BACKGROUND. COPY AND GRAPHICS TO BE A CONTRASTING COLOR. ARCHITECT TO SELECT FINAL COLORS FROM MANUFACTURER'S FULL RANGE OF COLORS.

F. SIGN MATERIAL TO LAMINATED-SHEET; SANDBLASTED POLYMER FACE SHEET WITH RAISED GRAPHICS LAMINATED TO ACRYLIC OR PHENOLIC BACKING TO PRODUCE COMPOSITE SHEET. COMPOSITE SHEET THICKNESS TO BE 1/4". SURFACE FINISH AND APPLIED GRAPHICS TO BE MANUFACTURER'S STANDARD FACTORY APPLIED EXTERIOR GRADE SIGN PAINT.

SIGNAGE SCHEDULE

SIGN NO.	ROOM NO.	SIGN TYPE	SIGN COPY	PICTOGRAMS TYPE(S)
1	101	2/I-101	EXIT	A
2	103	2/I-101	EXIT	A
3	103	2/I-101	MEN	A & B
4	105	2/I-101	EXIT	A
5	105	2/I-101	MEN	A & B
6	106	2/I-101	WOMEN	A & C
7	106	2/I-101	EXIT	A

SYMBOLS LEGEND

FX-BX FLOOR OR BASE FINISH TYPE
CX CEILING FINISH TYPE
WX WALL FINISH TYPE(S) AND TRIM TYPE(S)
FLOOR FINISH PATTERN
X SIGN TYPE NUMBER, REFER SIGN SCHEDULE

STATE OF MISSOURI
MICHAEL L. KEHOE,
GOVERNOR

MISSOURI ARCHITECT
DAVID MICHAEL FROHLING
NUMBER A-2010011354
2025 06 11
David Michael Frohling
A-2010011354

GASKIN HILL NORCROSS OF MISSOURI, INC.
300 South Jefferson Avenue, Suite 301, Springfield, MO 65806
417.869.0719
www.ghnae.com

OFFICE OF ADMINISTRATION
DIVISION OF FACILITIES MANAGEMENT, DESIGN AND CONSTRUCTION

DEPT. OF PUBLIC SAFETY
MISSOURI NATIONAL GUARD
DEPT. OF ADJUTANT GENERAL

CONSTRUCT NEW
44 SOLDIER BARRACKS
BUILDING 757

CAMP CROWDER
TRAINING SITE
890 RAY A CARVER DRIVE
NEOSHO, MISSOURI

PROJECT # T2234-01
SITE # 6260
ASSET # 8136260012

REVISION:
DATE:
REVISION:
DATE:
REVISION:
DATE:
ISSUE DATE: 06/11/2025

CAD DWG FILE: T2234-01-6260-8136260012-I-101
DRAWN BY: DMF
CHECKED BY: XXX
DESIGNED BY: DMF

SHEET TITLE:
INTERIOR FINISH PLAN

SHEET NUMBER:
I-101

JUNE 11, 2025

LOADING TABLE AND CODE INFORMATION

1.	DESIGN CODE		IBC 2018
	RISK CATEGORY		II
2.	DEAD LOADS		
	A.	TYPICAL ROOF DEAD LOAD	SELF WT
	B.	TYPICAL COLLATERAL LOAD	7 PSF
3.	LIVE LOADS		
	A.	TYPICAL ROOF LIVE LOAD	20 PSF
4.	SNOW LOAD		
	A.	FLAT ROOF SNOW LOAD w/ RAIN-ON-SNOW (pf)	16 PSF
	B.	GROUND SNOW LOAD (pg)	15 PSF
	C.	EXPOSURE FACTOR (Ce)	1.0
	D.	THERMAL FACTOR (Ct)	1.0
	E.	IMPORTANCE FACTOR (Is)	1.0
	F.	DRIFT	PER CODE
5.	WIND LOAD DESIGN CRITERIA		
	A.	ULTIMATE DESIGN WIND SPEED (Vult)	108 MPH
	B.	EXPOSURE CATEGORY	C
	C.	DIRECTIONALITY FACTOR (Kd)	0.85
	D.	TOPOGRAPHIC FACTOR (Kzt)	1.0
	E.	INTERNAL PRESSURE COEFFICIENT (GCpi)	+/- 0.18
	F.	INTERIOR WALLS AND PARTITIONS	5 PSF
6.	SEISMIC LOAD DESIGN CRITERIA		
	A.	SHORT PERIOD ACCELERATION (SS)	0.137
	B.	LONG PERIOD ACCELERATION (S1)	0.084
	C.	SITE CLASS	D
	D.	SHORT PERIOD RESPONSE (SDS)	0.146
	E.	LONG PERIOR RESPONSE (SD1)	0.134
	F.	SEISMIC DESIGN CATEGORY	C
	G.	IMPORTANCE FACTOR (Ie)	1.0

SYMBOL LEGEND

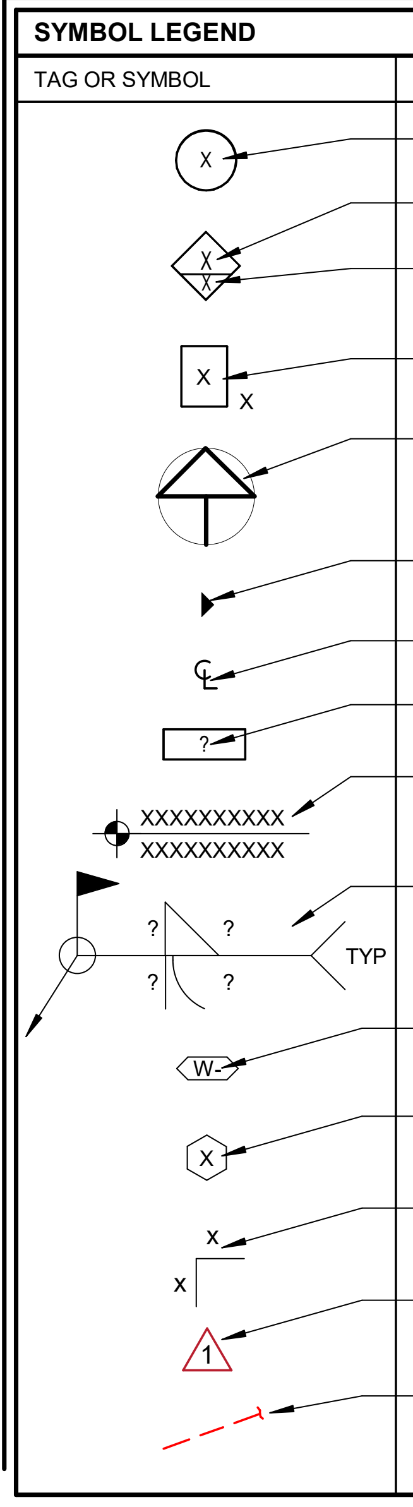

TAG OR SYMBOL	DESCRIPTION
X	FOOTING TYPE (SEE SCHEDULE)
X	COLUMN TYPE (SEE SCHEDULE)
X	BASEPLATE TYPE (SEE COLUMN SCHEDULE AND PLAN)
X X	SHEARWALL TYPE (SEE SCHEDULE)
	NORTH ARROW (COORDINATE EXACT DIRECTION w/ ARCH AND CIVIL DWGS)
	MOMENT CONNECTION (SEE PLAN AND NOTES)
℄	CENTERLINE
?	KEYNOTE
XXXXXXXXXX XXXXXXXXXX	ELEVATION MARKER
? ? ? ? TYP	WELD SYMBOL
W-	CMU WALL TAG
X	PEDESTAL TAG
X X	REINFORCING BAR
1	REVISION TAG
	BRACE MEMBER SYMBOL

A.	STRUCTURAL ELEMENT	MINIMUM COVER (INCHES)
	FOOTINGS	3" ALL SURFACES
	SLAB ON GRADE	1.5" TOP & 3" BOTTOM
	RETAINING WALLS & ELEVATOR PITS	2" EXTERIOR, 3/4" INTERIOR
	PEDESTALS	1.5"
	ELEVATED SLAB	3/4" BOTTOM, 3/4" TOP (U.N.O.)
	SHEAR WALLS	3/4" (ABOVE LEVEL 1)
PORTLAND CEMENT SHALL CONFORM TO ASTM C150, TYPE 1.		

ABBREVIATIONS

1.	A.R.=	ANCHOR ROD
2.	ACI=	AMERICAN CONCRETE INSTITUTE
3.	AISC=	AMERICAN INSTITUTE OF STEEL CONSTRUCTION
4.	AISI=	AMERICAN IRON AND STEEL INSTITUTE
5.	ARCH=	ARCHITECTURE/ARCHITECT
6.	ASTM=	AMERICAN SOCIETY FOR TESTING AND MATERIALS
7.	A.W.=	AFTER WELDING
8.	AWS=	AMERICAN WELDING SOCIETY
9.	BAR=	REBAR
10.	B.O.=	BOTTOM OF
11.	B.O.A.=	BACK OF ANGLE
12.	B.O.F.=	BOTTOM OF FOOTING
13.	B.O.S.=	BOTTOM OF STEEL
14.	BRG=	BEARING
15.	BTM=	BOTTOM
16.	CANT=	CANTILEVERED
17.	C.I.P.=	CAST-IN-PLACE
18.	C.J.P.=	COMPLETE JOINT PENETRATION WELD
19.	CL=	CENTERLINE
20.	CLR=	CLEAR
21.	CMU=	CONCRETE MASONRY UNIT
22.	COL=	COLUMN
23.	CONC=	CONCRETE
24.	CONN=	CONNECTION
25.	CONT=	CONTINUOUS
26.	D.B.=	DECK BEARING
27.	D.B.A.=	DEFORMED BAR ANCHOR
28.	D.E.=	DECK EDGE
29.	DIA=	DIAMETER
30.	DL=	DEAD LOAD
31.	DTL=	DETAIL
32.	DWG=	DRAWING
33.	E=	EXISTING
34.	EA=	EACH
35.	E.F.=	EACH FACE
36.	EL=	ELEVATION
37.	EPS=	EXPANDED POLYSTYRENE
38.	EQ=	EQUAL
39.	E.W.=	EACH WAY
40.	EXT=	EXTERIOR
41.	f'c=	CONCRETE COMPRESSIVE STRENGTH
42.	F.F.=	FINISHED FLOOR
43.	FND=	FOUNDATION
44.	F.O.W.=	FACE OF WALL
45.	F.S.=	FAR SIDE
46.	FTG=	FOOTING
47.	F.V.=	FIELD VERIFY
48.	GA=	GAGE / GAUGE
49.	GALV=	GALVANIZED
50.	G.B.=	GRADE BEAM
51.	G.C.=	GENERAL CONTRACTOR
52.	(H)=	HIGH
53.	H&L=	HIGH & LOW
54.	H.A.S.=	HEADED ANCHOR STUD
55.	HORIZ=	HORIZONTAL
56.	IBC=	INTERNATIONAL BUILDING CODE
57.	I.D.=	INSIDE DIAMETER
58.	INFO=	INFORMATION
59.	INT=	INTERIOR
60.	J.B.=	JOIST BEARING
61.	J.B.E.=	JOIST BEARING ELEVATION
62.	KIP=	1000 POUNDS
63.	KSI=	KIPS PER SQUARE INCH
64.	(L)=	LOW
65.	L=	LENGTH
66.	LB=	POUND
67.	LGSF=	LIGHT-GAGE STEEL FRAMING
68.	LL=	LIVE LOAD
69.	LLH=	LONG LEG HORIZONTAL
70.	LLV=	LONG LEG VERTICAL
71.	LONG=	LONGITUDINAL
72.	L.P.=	LAYOUT POINT
73.	LVL=	LAMINATED VENEER LUMBER
74.	LW=	LIGHTWEIGHT
75.	MAX=	MAXIMUM
76.	MECH=	MECHANICAL
77.	MEP=	MECHANICAL, ELECTRICAL, PLUMBING
78.	MFR=	MANUFACTURER
79.	MIL=	THOUSANDS OF AN INCH
80.	MIN=	MINIMUM
81.	MISC=	MISCELLANEOUS
82.	MTL=	METAL
83.	N.I.C.=	NOT IN CONTRACT
84.	N.S.=	NEAR SIDE
85.	N.T.S.=	NOT TO SCALE
86.	N.W.=	NORMAL WEIGHT
87.	O.C.=	ON CENTER
88.	O.D.=	OUTSIDE DIAMETER
89.	OPP=	OPPOSITE / OPPOSITE HAND
90.	PAF=	POWDER ACTUATED FASTENER
91.	P.C.F.=	POUNDS PER CUBIC FOOT
92.	PEMB=	PRE-ENGINEERED METAL BUILDING
93.	PLF=	POUNDS PER LINEAR FOOT
94.	PPT=	PRESERVATIVE PRESSURE TREATED
95.	PSF=	POUNDS PER SQUARE FOOT
96.	PSI=	POUNDS PER SQUARE INCH
97.	PT=	POST TENSIONED
98.	REINF=	REINFORCING
99.	REQ=	REQUIRE
100.	RTU=	ROOF TOP UNIT
101.	S.C.=	SLIP CRITICAL
102.	SCH=	SCHEDULE
103.	SDI=	STEEL DECK INSTITUTE
104.	SIM=	SIMILAR
105.	SJI=	STEEL JOIST INSTITUTE
106.	SL=	SNOW LOAD
107.	S.O.G.=	SLAB ON GRADE
108.	SPECS=	SPECIFICATIONS
109.	STD=	STANDARD
110.	STL=	STEEL
111.	T=	THICKNESS
112.	T&B=	TOP AND BOTTOM
113.	T.O.=	TOP OF
114.	T.O.F.=	TOP OF FOOTING
115.	T.O.P.=	TOP OF PEDESTAL
116.	T.O.S.=	TOP OF STEEL
117.	T.O.W.=	TOP OF WALL
118.	TYP=	TYPICAL
119.	UL=	ULTIMATE LOAD
120.	U.N.O.=	UNLESS NOTED OTHERWISE
121.	VERT=	VERTICAL
122.	VLD=	VERTICAL LEG DOWN
123.	W=	WIDTH
124.	WL=	WIND LOAD
125.	W.P.=	WORK POINT
126.	WWF=	WELDED WIRE FABRIC
127.	(#)=	QUANTITY

CONCRETE NOTES

1. CONCRETE FOR FOUNDATIONS, FOOTINGS AND INTERIOR SLABS ON GRADE SHALL BE AS FOLLOWS:
   - 28-DAY COMPRESSIVE STRENGTH: 3000 PSI
   - MAXIMUM WATER TO CEMENT RATIO: 0.52
   - SLUMP: 4" ±1"
2. CONCRETE FOR EXTERIOR USES, SIDEWALKS, RETAINING WALLS, BASEMENT WALLS, AND EXTERIOR SLABS ON GRADE SHALL BE AS FOLLOWS:
   - 28-DAY COMPRESSIVE STRENGTH: 4000 PSI
   - MAXIMUM WATER TO CEMENT RATIO: 0.45
   - SLUMP: 4" ±1"
   - AIR-ENTRAINMENT: 6% ±1%
     AIR-ENTRAINING ADMIXTURE SHALL CONFORM TO ASTM C260.
3. NO LIME SAND FINE AGGREGATE MAY BE USED IN CONCRETE EXPOSED TO WEATHER, VIEW, OR IN HORIZONTAL APPLICATIONS.
4. ALL REINFORCING STEEL SHALL CONFORM TO ASTM A615 GRADE 60.
5. WELDED WIRE FABRIC SHALL CONFORM TO ASTM A185. LAP FABRIC 9" ON SIDES AND ENDS. MAINTAIN WIRE 1" TO 2" BELOW TOP SURFACE OF SLABS ON GRADE. PROVIDE CHAIRS, BOLSTERS OR OTHER APPROVED MEANS TO PROPERLY LOCATE REINFORCING.
6. IF ADDITIONAL FLOWABILITY IS REQUIRED FOR PLACEMENT OF ANY CONCRETE MIX, A WATER-REDUCING ADDITIVE CONFORMING TO ASTM C494, TYPE A, D, E OR F SHALL BE USED. NO ADDITIONAL WATER MAY BE ADDED TO THE MIX AT THE SITE. SLUMP FOR CONCRETE CONTAINING WATER-REDUCING OR HIGH-RANGE WATER-REDUCING ADMIXTURE SHALL NOT EXCEED 8" AFTER ADMIXTURE IS ADDED TO CONCRETE WITH A 2"-4" SLUMP.
7. INTERIOR SLABS SHALL HAVE SMOOTH TROWELED FINISH AND EXTERIOR SLABS SHALL HAVE LIGHT BROOM FINISH, UNO. ALL SLABS SHALL HAVE A CURING COMPOUND COMPLYING WITH ASTM C309 APPLIED TO SURFACE. EXCEPTIONS ARE WHERE FLOOR FINISHES REQUIRE SCRATCH FINISH AND WHERE CURING COMPOUNDS ARE NOT COMPATIBLE WITH ADHESIVES, ETC.
8. CONTRACTOR SHALL COORDINATE ALL CONCRETE SEALERS, CURING COMPOUNDS, ETC TO ENSURE COMPATIBILITY WITH FLOORING ADHESIVES FOR FLOORING INDICATED IN THE FLOOR PLANS AND FLOOR FINISH PLANS AS APPLICABLE.
9. TESTING OF FRESH CONCRETE SHALL BE DONE BY A QUALIFIED TESTING LABORATORY RETAINED BY THE OWNER AND APPROVED BY THE ENGINEER. TESTING SHALL INCLUDE:
   - SLUMP
   - AIR CONTENT
   - CONCRETE TEMPERATURE
   - 28 DAY COMPRESSIVE STRENGTH
   - NOTE ANY WATER OR ADMIXTURES ADDED ON-SITE
10. REFER TO ASTM C172 AND C94. PERFORM ONE SLUMP AND ONE AIR CONTENT TEST FOR EACH DAYS POUR AND ADDITIONAL TESTS WHEN THE CONCRETE CONSISTENCY SEEMS TO HAVE CHANGED IN THE OPINION OF THE INSPECTOR. REFER TO ASTM C143, C173 AND C231. PERFORM TEMPERATURE TESTS HOURLY WHEN THE AMBIENT AIR TEMPERATURE IS BELOW 40 DEGREES F OR ABOVE 80 DEGREES F AND ONE TEMPERATURE TEST FOR EACH SET OF COMPRESSIVE-STRENGTH SPECIMENS. REFER TO ASTM C1064. PERFORM ONE COMPRESSIVE-STRENGTH TEST FOR EACH DAYS POUR AND AN ADDITIONAL TEST FOR EACH 50 CUBIC YARD MORE THAN THE FIRST 25 CUBIC YARD. TEST ONE SPECIMEN AT 7 DAYS AND 2 SPECIMENS AT 28 DAYS. REFER TO ASTM C31 AND C39.
11. CONCRETE FOR GROUTING MASONRY UNITS IS SPECIFIED IN CONCRETE MASONRY UNIT NOTES.
12. WHERE FOOTINGS, WALLS, OR OTHER STRUCTURAL ELEMENTS INTERSECT, CORNER OR TEE, PROVIDE CORNER BARS WITH REQUIRED LAP LENGTHS TO PROVIDE CONTINUITY OF HORIZONTAL STEEL REINFORCING UNO.
13. PROVIDE A MINIMUM OF 3" COVER FOR ANCHOR BOLTS AND LOCATE HORIZONTAL REINFORCEMENT TO THE OUTSIDE FOR ANCHOR BOLT CONTAINMENT, UNO.
14. PROVIDE TEMPORARY SHORING AND BRACING OF ALL STRUCTURAL AND MISCELLANEOUS ELEMENTS UNTIL CONCRETE HAS OBTAINED 80% OF DESIGN STRENGTH AND ALL PERMANENT BRACING ELEMENTS ARE INSTALLED.
15. UNLESS NOTED OTHERWISE, PROVIDE CONSTRUCTION JOINTS IN SLABS ON GRADE AT APPROXIMATELY 50 FEET IN EACH DIRECTION. PROVIDE CONTROL JOINTS IN SLABS ON GRADE AT APPROXIMATELY 10 FEET ON CENTER IN EACH DIRECTION. JOINTS SHALL FORM NEARLY SQUARE SHAPES. CONTRACTOR SHALL COORDINATE JOINT LOCATIONS WITH TILE LAYOUT AS SHOWN IN THE FLOOR PLANS AND FLOOR FINISH PLANS AS APPLICABLE.
16. WHERE DOWELS, BOLTS OR INSERTS ARE CALLED TO BE ANCHORED TO CAST IN PLACE OR PRECAST CONCRETE ELEMENTS USING EPOXY ADHESIVES, USE ANCHORAGE SYSTEM EQUAL TO "HILTI" HIT RE 500 INJECTION ADHESIVE. FOLLOW ALL MANUFACTURERS RECOMMENDATIONS. ALTERNATE ANCHORAGE SYSTEMS MAY BE USED WITH ENGINEER'S PRIOR APPROVAL.
17. SAWN CONTROL JOINTS SHALL BE PLACED AS SOON AS CONCRETE IS ABLE TO BE SAWN WITHOUT PULLING OUT AGGREGATE FROM FLOOR. SLABS SHALL NOT BE LEFT OVERNIGHT, OR ANY REASONABLE AMOUNT OF TIME, WITHOUT SAWING JOINTS. WEATHER IS CRITICAL TO SCHEDULE OF SAWN JOINTS. IF LARGE AREAS OF SLAB ARE POURED AT ONE TIME, SEVERAL SAWS MAY BE REQUIRED TO PROVIDE JOINTS IN TIME TO PREVENT SHRINKAGE CRACKING. PROPER JOINTING OF SLAB IS CRITICAL. REFER TO ACI MANUAL OF CONCRETE PRACTICE FOR PROPER JOINTING TECHNIQUES.
18. DETAILING, MATERIALS AND INSTALLATION OF CONCRETE REINFORCING STEEL SHALL MEET REQ. AS SET FORTH BY CRSI AND THE AMERICAN CONCRETE INSTITUTE AND THE APPLICABLE BUILDING CODE.
19. SHOP DRAWINGS SHALL BE SUBMITTED INDICATING COMPLETE INFORMATION REQUIRED FOR CONSTRUCTION OF THE REINFORCED CONCRETE ELEMENTS. SHOP DRAWINGS SHALL INCLUDE LAYOUT AND DIMENSIONS OF REINFORCING INCLUDING ANY OPENINGS, CONVENTIONAL REINFORCEMENT DETAILS, CONNECTION DETAILS, PROCEDURES AND SEQUENCES ETC.
20. WHEN PLACING CONCRETE IN HOT WEATHER, REFER TO ACI 301, WHEN PLACING CONCRETE IN COLD WEATHER, REFER TO ACI 306.1.
21. CONCRETE ACCESSORIES SHALL BE PLASTIC TIPPED.
22. FLY ASH MAY BE USED AT CONTRACTOR'S OPTION, 25% MAXIMUM.

GENERAL FOUNDATION & SLAB ON GRADE NOTES

1. A SOIL INVESTIGATION HAS BEEN DONE FOR THIS SITE. REFER TO ANDERSON ENGINEERING PROJECT # 22SP10269 DATED 11/15/2022. THIS REPORT SHALL BE CONSIDERED A PART OF THESE FOUNDATION NOTES. IT IS THE CONTRACTOR'S RESPONSIBILITY TO OBTAIN, BE FAMILIAR WITH, AND ADHERE TO THE RECOMMENDATIONS IN THE REPORT. IF ANY RECOMMENDATION IN THE REPORT CONFLICTS WITH OTHER REQUIREMENTS IN THE CONTRACT DOCUMENTS NOTIFY THE ENGINEER FOR CLARIFICATION (FOR BIDDING PURPOSES UTILIZE THE MORE STRINGENT REQUIREMENT UNTIL FORMAL CLARIFICATION IS ISSUED).
2. REMOVE ALL UNDOCUMENTED FILL IN ACCORDANCE WITH THE GEOTECHNICAL REPORT.
3. FOOTINGS SHALL BEAR ON COMPACTED GRANULAR STONE, LEAN CONCRETE OR STIFF NATURAL SOILS PER THE GEOTECHNICAL REPORT. SUITABLE FILL OR SOILS SHALL EXTEND A MINIMUM OF TWO FOOTING WIDTHS DEEP BELOW THE FOOTINGS.
4. PERIMETER FOOTINGS SHALL BE OVER EXCAVATED AND FILLED WITH COMPACTED GRANULAR STONE OR LEAN CONCRETE TO 60 INCHES BELOW FINISH GRADE.
5. REMOVE UNSUITABLE SOILS, FILL & CLAYS BELOW SLABS IN ACCORDANCE WITH THE GEOTECHNICAL REPORT.
6. IN THE AREA OF THE STRUCTURE, EXISTING ORGANIC MATERIAL, UNSUITABLE SOIL, ABANDONED FOOTINGS, UTILITIES AND ANY OTHER EXISTING UNSUITABLE MATERIALS SHALL BE REMOVED IN ACCORDANCE WITH THE GEOTECHNICAL REPORT. ALL FILL AND COMPACTION SHALL BE AS RECOMMENDED BY THE GEOTECHNICAL REPORT. ADEQUATE FIELD DENSITY AND MOISTURE CONTENT TESTS SHALL BE PERFORMED TO ENSURE COMPLIANCE WITH REQUIREMENTS.
7. TESTING OF CONTROLLED STRUCTURAL FILL SHALL BE DONE BY A QUALIFIED TESTING LABORATORY RETAINED BY THE OWNER. SEE STRUCTURAL DRAWINGS FOR REQUIRED SPECIAL INSPECTIONS AND TESTING. CONTRACTOR IS RESPONSIBLE FOR COORDINATING WORK WITH INSPECTOR.
   - AFTER STRIPPING SITE AND PRIOR TO PLACEMENT OF ANY FILL, NOTIFY SPECIAL INSPECTOR/TESTING AGENCY FOR INSPECTION OF SOIL CONDITIONS. INSPECTION SHALL INCLUDE PROOF ROLLING SITE WITH HEAVY EQUIPMENT PROVIDED BY THE CONTRACTOR.
   - AFTER EXCAVATION FOR FOUNDATIONS AND PRIOR TO PLACEMENT OF STEEL REINFORCEMENT OR CONCRETE, NOTIFY SPECIAL INSPECTOR/TESTING AGENCY FOR INSPECTION OF SOIL CONDITIONS. WHEN SOIL OF INADEQUATE STRENGTH IS NOTED, CONTRACTOR SHALL FURTHER DEEPEN EXCAVATIONS UNTIL SUITABLE BEARING CONDITIONS ARE VERIFIED BY TESTING. OVEREXCAVATIONS MAY BE BACKFILLED WITH SUITABLE COMPACTED ENGINEERED FILL, SUITABLE GRANULAR BASE, OR STRUCTURAL CONCRETE BACKFILL (SEE GEOTECHNICAL REPORT FOR RECOMMENDATIONS).
8. EXTERIOR FOOTINGS SHALL BEAR AT MIN. DEPTHS AS NOTED IN FOUNDATION DETAILS AND PLANS, 24" MINIMUM BELOW EXTERIOR FINISH GRADE, OR INTO APPROVED BEARING STRATA, WHICHEVER DEPTH IS GREATER. NOTE THAT FOOTING BEARING ELEVATIONS GIVEN ON THE PLANS ARE ESTIMATED DEPTHS ONLY. WHERE UNSUITABLE SOIL IS ENCOUNTERED, FOOTING DEPTHS MAY VARY.
9. EXCAVATION FOR FOOTINGS SHALL BE CUT TO ACCURATE SIZE AND DIMENSIONS AS SHOWN ON PLANS. ALL SOIL BELOW SLABS AND FOOTINGS SHALL BE PROPERLY COMPACTED AND SUBGRADE BROUGHT TO A REASONABLE TRUE AND LEVEL PLANE BEFORE PLACING CONCRETE.
10. CONTINUOUS FOOTINGS AND INDIVIDUAL FOOTINGS ARE DESIGNED FOR A NET ALLOWABLE SOIL BEARING OF:
    - CONTINUOUS FOOTINGS: 2000 PSF
    - INDIVIDUAL FOOTINGS: 2000 PSF
    - FOR EITHER NATURALLY OCCURRING SOIL OR COMPACTED ENGINEERED FILL.
11. TYPICAL SLABS ON GRADE
    - THICKNESS: 4" THICK NORMAL WEIGHT CONCRETE
    - REINFORCING: 6x6-W1.4xW1.4 WELDED WIRE FABRIC (WWF)
    - VAPOR BARRIER: 15 MIL., (ASTM E1745 CLASS A)
    - SUBGRADE: A MINIMUM OF 6" OF FREE-DRAINING GRANULAR BASE, COMPACTED PER RECOMMENDATIONS OF GEOTECHNICAL ENGINEER.
    - MAINTAIN REINFORCING 1"-2" BELOW TOP SURFACE OF SLABS ON GRADE. PROVIDE BOLSTERS, CHAIRS OR OTHER MEANS APPROVED IN WRITING BY THE ENGINEER TO PROPERLY LOCATE REINFORCING. GRANULAR BASE SHALL BE #57 STONE OR APPROVED EQUAL UNLESS OTHERWISE INDICATED IN GEOTECHNICAL REPORT. REFER TO ASTM D448 FOR GRADATION.
    - IN SOME CASES 1.5 POUNDS (MIN) OF POLYPROPYLENE FIBRILLATED FIBERS PER CUBIC YARD REINFORCING MAY BE SUBSTITUTED FOR THE WWF REINFORCING. ANY VISIBLE FIBERS REMAINING AFTER CONCRETE HAS CURED SHALL BE TORCHED OFF. THIS SUBSTITUTION IS NOT ALWAYS APPROPRIATE AND SHALL NOT BE MADE WITHOUT WRITTEN APPROVAL OF THE ENGINEER.
    - FINISH SLAB TO THE FOLLOWING TOLERANCES IN ACCORDANCE WITH ASTM E1155 FOR A RANDOMLY TRAFFICKED FLOOR SURFACE:
      - OVERALL FLATNESS, F_F=45
      - OVERALL LEVELNESS F_L=35
      - MIN. LOCAL FLATNESS F_F=30
      - MIN. LOCAL LEVELNESS F_L=24
      - MEASURE WITHIN 24 HOURS OF COMPLETION OF FLOOR FINISHING.
12. DRAINAGE FILL: SEE GEOTECHNICAL REPORT.
13. CONTRACTOR IS RESPONSIBLE TO MAINTAIN EXCAVATIONS AND BACKFILL MATERIALS AT AN APPROPRIATE MOISTURE CONTENT FOR PROPER SOIL BEARING CAPACITY AND COMPACTION OF BACKFILL MATERIALS WITH REGARD TO THE REQUIREMENTS OF THE SOILS REPORT.
14. CONTRACTOR SHALL COORDINATE WITH THE CIVIL / SITE DRAWINGS TO DETERMINE WHETHER FOUNDATION DRAINS AROUND PERIMETER OF BUILDING AND/OR UNDER THE SLAB-ON-GRADE SHALL BE REQUIRED AND, IF SO, SHALL RUN TO DAYLIGHT OR EXTENDED TO THE STORM SEWER.
15. AT RETAINING WALLS FILTER FABRIC SHALL BE PLACED AT THE INTERFACE BETWEEN THE DRAINAGE FILL AND EITHER NATURAL OR COMPACTED SUBGRADE. PERFORATED DRAINS SHALL ALSO BE WRAPPED WITH FILTER FABRIC.

DEFERRED SUBMITTAL NOTES

1. THE FOLLOWING SUBMITTALS SHALL BE SUBMITTED FOR REVIEW AT A LATER DATE:
   - EXTERIOR LIGHT GAUGE FRAMING
   - PRE-ENGINEERED METAL BUILDING PACKAGE
2. SUBMITTALS SHALL INCLUDE PLANS, DETAILS AND CALCULATIONS SEALED BY AN ENGINEER LICENSED IN THE STATE WHERE THE PROJECT IS LOCATED.

MEANS AND METHODS

1. DESIGN LOADINGS AND STRUCTURAL ANALYSIS IS BASED ON CODE PRESCRIBED LOADS FOR THE COMPLETED STRUCTURE.
2. CONTRACTOR SHALL BE RESPONSIBLE FOR ALL MEANS AND METHODS OF CONSTRUCTION.
3. THIS STRUCTURE IS DESIGNED TO BE STABLE AS A COMPLETE WHOLE. ANY AND ALL TEMPORARY BRACES AND SHORING REQUIRED TO RESIST ALL LOADS DURING CONSTRUCTION SHALL BE DESIGNED AND SUPPLIED BY THE CONTRACTOR.
4. HEAVY LOADS THAT EXCEED 75% OF ALLOWABLE LIVE LOADS SHOWN ON THE PLANS, FOR TEMPORARY EQUIPMENT, CONSTRUCTION MATERIALS, OR OTHER LOADS NOT SHOWN IN THE CONTRACT DOCUMENTS, SHALL NOT BE PLACED OR SUPPORTED FROM ELEVATED STRUCTURE WITHOUT PRIOR WRITTEN APPROVAL OF THE STRUCTURAL ENGINEER.

POST-INSTALLED ANCHOR NOTES

1. CONTINUOUS INSPECTIONS ARE REQUIRED FOR POST INSTALLED ANCHOR BOLTS INCLUDING TYPE, SIZE, LENGTH, DRILLING METHOD, HOLE CLEANING PROCEDURES, AND ANCHOR INSTALLATION AND SETTING PROCEDURES.
2. ADHESIVE ANCHORS SHALL BE INSTALLED BY AN ADHESIVE ANCHOR INSTALLER WHO HAS BEEN CERTIFIED BY ACI AND TRAINED BY THE MANUFACTURER.
3. ANCHORS SHALL BE INSTALLED IN ACCORDANCE WITH THE MANUFACTURER'S PRINTED INSTALLATION INSTRUCTIONS.

PRE-ENGINEERED METAL BUILDING NOTES

1. COMPONENT ROOFING, BRACING, FRAMING, HAT CHANNELS, PURLINS AND GIRTS SHALL BE ENGINEERED, DESIGNED AND FABRICATED PER METAL BUILDING INDUSTRY STANDARDS. SUBMIT COMPONENT INFORMATION INCLUDING SIZE, LAYOUT, DETAILS AND INSTALLATION PROCEDURES. ACCOMMODATIONS SHALL BE MADE FOR SUPPORT OF CONCENTRATED LOADS AS SHOWN ON DRAWINGS.
2. METAL BUILDING COMPONENTS SHALL CONFORM TO LOCATION, SIZE, CONFIGURATIONS AND CONTROLLING HEIGHTS AS SHOWN IN THE DRAWINGS. VARIATIONS MAY BE ALLOWED ONLY BY WRITTEN APPROVAL OF THE ENGINEER.
3. THE FOUNDATIONS ARE DESIGNED TO SUPPORT ASSUMED MAXIMUM VERTICAL AND HORIZONTAL LOADS AT BUILDING FRAMES AND ENDWALL COLUMNS. NOTIFY ENGINEER OF THE ACTUAL BUILDING DESIGN LOADS FOR VERIFICATION OF FOUNDATION DESIGN.
4. PEDESTAL SIZES FOR METAL BUILDING COLUMNS ARE SHOWN IN DETAILS. REQUIRED DIMENSIONS MAY VARY FOR DIFFERENT METAL BUILDING MANUFACTURERS. THE CONTRACTOR SHALL VERIFY ALL DIMENSIONS AND PROVIDE PEDESTALS PER MANUFACTURER REQUIREMENTS. SUBMIT ANY VARIATIONS FOR APPROVAL.
5. METAL BUILDING SUPPLIER SHALL PROVIDE TEMPLATES TO THE CONTRACTOR FOR ANCHOR BOLT PLACEMENT.
6. THE METAL BUILDING SUPPLIER SHALL DESIGN THE METAL BUILDING SYSTEM ASSEMBLIES TO WITHSTAND DESIGN LOADS INDICATED WITH LIVE LOAD DEFLECTIONS NO GREATER THAN THE FOLLOWING:
   - SECONDARY MEMBERS AND COMPONENTS SUPPORTING BRICK OR MASONRY:
     A. L/600
   - ALL OTHER MEMBERS AND COMPONENTS:
     A. L/360
   - LATERAL DRIFT(w/o BRICK VENEER):
     A. H/180 (WIND)
     B. H/120 (SEISMIC)
   - LATERAL DRIFT (w/ BRICK VENEER):
     A. H/300 (WIND)
     B. H/240 (SEISMIC)

HOOKED DOWEL DEVELOPMENT LENGTHS IN TENSION (INCHES)

BAR SIZE	EMBEDMENT			EXTENSION		MINIMUM RADIUS OF BEND (INCHES)
	3000 PSI CONCRETE	4000 PSI CONCRETE	5000 PSI CONCRETE	90 DEG HOOK	180 DEG HOOK	
#3	8	7	6	4.5	2.5	1.50
#4	11	9	8	6.0	2.5	2.00
#5	14	12	11	7.5	2.5	2.50
#6	16	14	13	9.0	3.0	3.00
#7	19	17	15	10.5	3.5	3.50
#8	22	19	17	12.0	4.0	4.00
#9	25	21	19	13.5	4.5	5.64
#10	28	24	22	15.2	5.1	6.35
#11	31	27	24	16.9	5.6	7.05

NOTES:

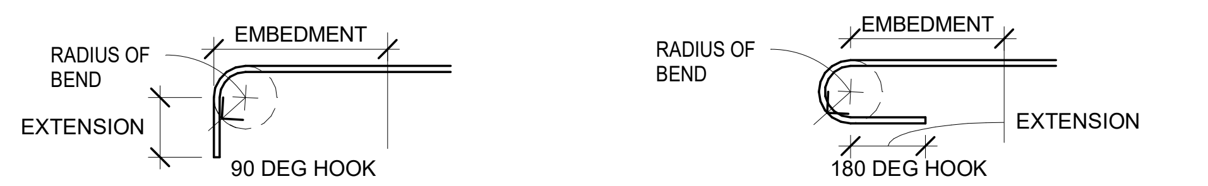

LAP SPLICE LENGTHS (INCHES)

BAR SIZE	TENSION (CLASS B SPLICE)						COMPRESSION
	OTHER BARS			TOP BARS			3000 PSI 4000 PSI 5000 PSI CONCRETE
	3000 PSI CONCRETE	4000 PSI CONCRETE	5000 PSI CONCRETE	3000 PSI CONCRETE	4000 PSI CONCRETE	5000 PSI CONCRETE	
#3	22	19	17	28	24	22	12
#4	29	25	22	37	32	29	15
#5	36	31	28	47	40	36	19
#6	43	37	33	56	48	43	23
#7	63	54	49	81	70	63	27
#8	72	62	55	93	80	72	30
#9	81	70	63	105	91	81	34
#10	91	79	70	118	102	91	38
#11	101	87	78	131	113	101	43

NOTES:
1. TOP BARS ARE HORIZONTAL REINFORCEMENT PLACED SO THAT MORE THAN 12" OF FRESH CONCRETE IS CAST IN THE MEMBER BELOW THE REINFORCEMENT.
2. LAP SPLICE LENGTHS ARE BASED ON BARS SPACED AT (2) BAR DIAMETERS OR MORE ON CENTER W/ (1) BAR DIAMETER MINIMUM OF CONCRETE COVER. NOTIFY ENGINEER IF SPACING IS LESS THAN (2) BAR DIAMETERS.

STRAIGHT DOWEL DEVELOPMENT LENGTHS (INCHES)

BAR SIZE	TENSION						COMPRESSION		
	OTHER BARS			TOP BARS					
	3000 PSI CONCRETE	4000 PSI CONCRETE	5000 PSI CONCRETE	3000 PSI CONCRETE	4000 PSI CONCRETE	5000 PSI CONCRETE	3000 PSI CONCRETE	4000 PSI CONCRETE	5000 PSI CONCRETE
#3	17	15	13	22	19	17	9	8	8
#4	22	19	17	29	25	22	11	10	9
#5	28	24	22	36	31	28	14	12	12
#6	33	29	26	43	37	33	17	15	14
#7	48	42	37	63	54	49	20	17	16
#8	55	48	43	72	62	55	22	19	18
#9	62	54	48	81	70	63	25	22	21
#10	70	61	54	91	79	70	28	25	23
#11	78	67	60	101	87	78	31	27	25

NOTES:
1. TOP BARS ARE HORIZONTAL REINFORCEMENT PLACED SO THAT MORE THAN 12" OF FRESH CONCRETE IS CAST IN THE MEMBER BELOW THE REINFORCEMENT.
2. LAP SPLICE LENGTHS ARE BASED ON BARS SPACED AT (2) BAR DIAMETERS OR MORE ON CENTER W/ (1) BARS DIAMATER MINIMUM ON CONCRETE COVER. NOTIFY ENGINEER IF SPACING IS LESS THAN (2) BAR DIAMETERS.

RTM ENGINEERING CONSULTANTS, LLC
3045 S. KANSAS EXPRESSWAY
SPRINGFIELD, MO 65807
PHONE: 417.708.9315
rtm engineering consultants
MO C of A 2014035826

STATE OF MISSOURI
MICHAEL L. KEHOE,
GOVERNOR

CHARLES M. TAYLOR
NUMBER PE-2017014241
6/11/2025
Charles M. Taylor, PE
Lic. No. PE 2017014241
PROFESSIONAL SEAL

GHN
ARCHITECTS + ENGINEERS
300 South Jefferson Avenue, Suite 301, Springfield, MO 65806
P: 417.869.0719 | F: 417.869.3044 | W: www.ghnae.com

OFFICE OF
ADMINSTRATION
DIVISION OF FACILITIES
MANAGEMENT, DESIGN
AND CONSTRUCTION

DEPT. OF PUBLIC SAFETY
MISSOURI NATIONAL GUARD
DEPT. OF ADJUTANT GENERAL

CONSTRUCT NEW
44 SOLDIER BARRACKS
BUILDING 757

CAMP CROWDER
TRAINING SITE
890 RAY A CARVER DRIVE
NEOSHO, MISSOURI

PROJECT # T2234-01
SITE # 6260
ASSET # 8136260012

REVISION:
DATE:
REVISION:
DATE:
REVISION:
DATE:
ISSUE DATE: 6/11/2025

CAD DWG FILE:
DRAWN BY: CAW
CHECKED BY: CMT
DESIGNED BY:

SHEET TITLE:

GENERAL NOTES

SHEET NUMBER:

S-000

21 OF 32 SHEETS
JUNE 11, 2025

P:\GHN Architects\Crowder Barracks\Revit-R23\S-Crowder Barracks_R23.rvt
6/11/2025 3:59:39 PM

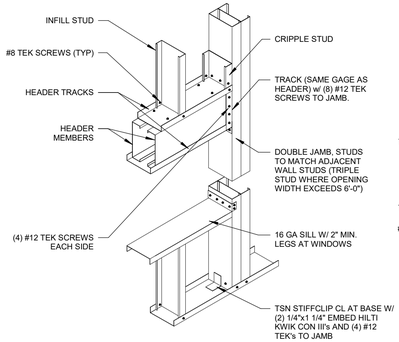

HEADER/SILL DETAIL AT EXTERIOR NON-LOAD BEARING WALL

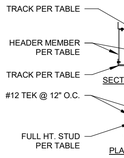

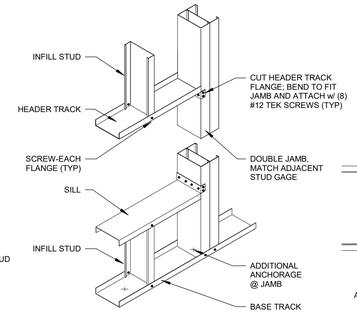

HEADER/SILL DETAIL AT INTERIOR NON-LOAD BEARING WALL

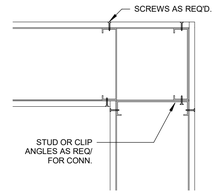

TYPICAL CORNER DETAIL

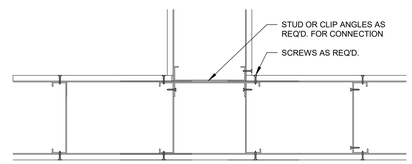

WALL INTERSECTION FRAMING

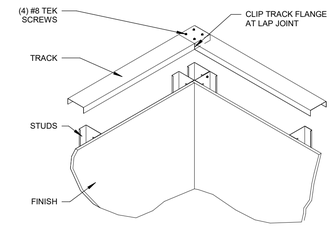

TYPICAL TRACK AT CORNER

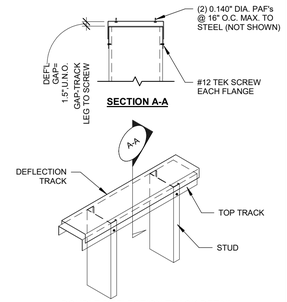

DOUBLE DEFLECTION TRACK DETAIL

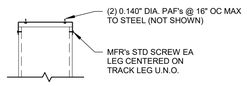

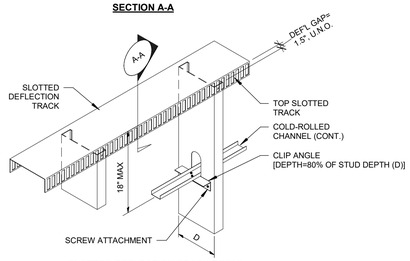

SLOTTED DEFLECTION TRACK DETAIL

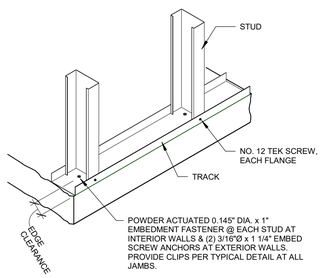

TYPICAL NON-LOAD BEARING TRACK ANCHORAGE

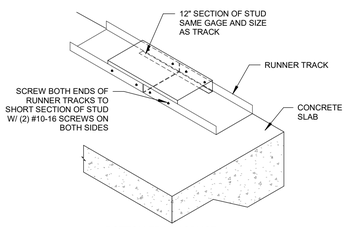

BOTTOM TRACK SPLICE

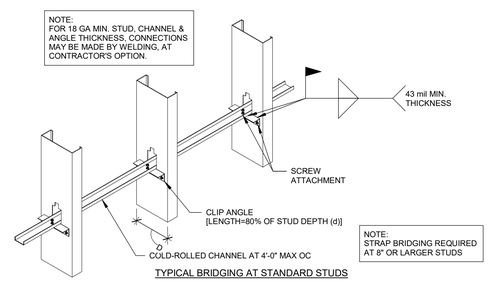

TYPICAL BRIDGING AT STANDARD STUDS

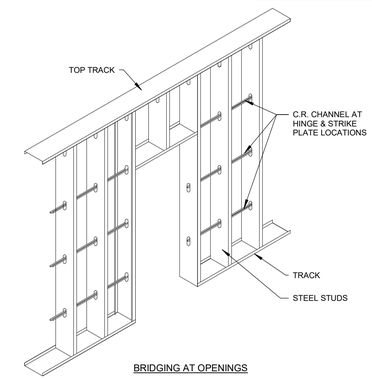

BRIDGING AT OPENINGS

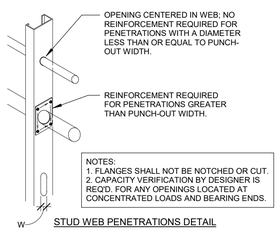

NOTES:
1. FLANGES SHALL NOT BE NOTCHED OR CUT.
2. CAPACITY VERIFICATION BY DESIGNER IS REQ'D. FOR ANY OPENINGS LOCATED AT CONCENTRATED LOADS AND BEARING ENDS.

STUD WEB PENETRATIONS DETAIL

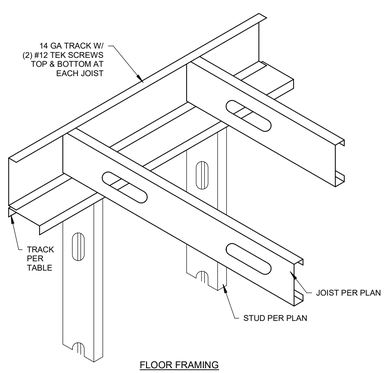

FLOOR FRAMING

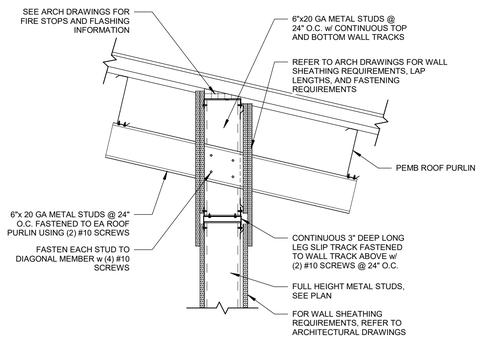

TOP OF WALL ATTACHMENT DETAIL PARALLEL TO PURLINS

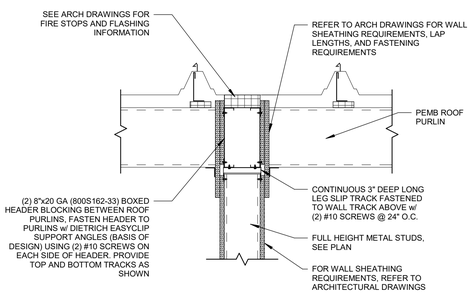

TOP OF WALL ATTACHMENT DETAIL PERPENDICULAR TO PURLINS

BOX HEADERS/SILLS IN NON-LOAD BEARING WALLS (UNO)

OPENING WIDTH	MINIMUM HEADER SIZE	
INTERIOR	HEADER MEMBER	TRACK
4' OR LESS	SINGLE 600S200-43	-
4'-1" TO 7'-0"	BOXED 600S162-43	362/600T125-33
7'-0" TO 11'-0"	BOXED 600S200-54	362/600T125-43

NOTES:
1. WHERE HEADERS CAN BE BRACED BY KICKERS @ 4'-0" O.C. AND ARE NOT SUPPORTING VERTICAL LOADS, A BOX HEADER IS NOT REQUIRED. PROVIDE TRACK MATCHING STUD SIZE AND GAGE (MIN. TO BE 18GA).
2. HEADERS SHALL NOT SUPPORT BRICK LOAD.
3. STUD AND TRACK SIZES SHOWN ARE MINIMUMS. DEPTHS SHALL BE COORDINATED W/ ARCH.
4. TRACKS AT BOXED HEADERS SHALL MATCH ADJACENT WALL STUD THICKNESS, U.N.O.

COLD-FORMED STEEL NOTES

PRODUCT IDENTIFICATION

THE AMERICAN IRON AND STEEL INSTITUTE STANDARDS ARE USED IN THIS PACKAGE. ANY MANUFACTURER WHOSE PRODUCT GEOMETRIES MEETS OR EXCEED AISI STANDARDS ARE ACCEPTABLE.

362 S 162 33
WEB SIZE — THICKNESS (MILS)
MEMBER TYPE — FLANGE SIZE

THE LAST TWO NUMBERS INDICATE THE STEEL THICKNESS

1. COLD-FORMED STEEL FABRICATION AND INSTALLATION SHALL BE IN ACCORDANCE WITH AISI "STANDARD FOR COLD-FORMED STEEL FRAMING - GENERAL PROVISIONS."
2. WELDING OF COLD-FORMED STEEL SHALL BE IN ACCORDANCE WITH THE STANDARD CODE OF ARC AND GAS WELDING IN BUILDING CONSTRUCTION.
3. AXIALLY LOADED STUDS SHALL BE POSITIONED DIRECTLY UNDER JOIST BEARING POINTS WHENEVER POSSIBLE.
4. STUDS SHALL NOT BE SPLICED.
5. PROVIDE MANUFACTURER'S STANDARD BRIDGING AS NOTED ON STUD TABLES (4' MAX U.N.O.).
6. PROVIDE DOUBLE STUDS, MINIMUM, AT ALL PARTITION ENDS, EACH SIDE OF OPENINGS, AND WHERE INDICATED ON DRAWINGS.
7. PROVIDE DEFLECTION TRACK OR CLIPS AT HEADS OF ALL NON-LOAD-BEARING WALLS.
8. MINIMUM TRACK SIZE SHALL MATCH STUD SIZE U.N.O.
9. SEE STANDARD LIGHT GAGE DETAILS AND STUD CHARTS FOR ADDITIONAL INFORMATION.
10. ALIGN WEB PUNCHOUTS IN STUD WALLS. WEB PUNCHOUTS MUST BE LOCATED A MINIMUM OF 10" AWAY FROM THE STUD END.
11. MINIMUM YIELD STRENGTH FOR 18 AND 20 GA COLD-FORMED MEMBERS SHALL BE 33 KSI. MINIMUM YIELD STRENGTH FOR 16 GA AND HEAVIER COLD-FORMED MEMBERS SHALL BE 50 KSI.
12. HEADERS AND BUILT-UP BEAMS SHALL BE FORMED FROM UNPUNCHED MEMBERS.
13. STUDS SHALL NOT BE NOTCHED, SPLICED, OR COPED WITHOUT WRITTEN APPROVAL OF ENGINEER.
14. CUTTING OF STUDS SHALL BE DONE BY SAWING, SHEARING, OR PLASMA CUTTING. OTHER METHODS OF CUTTING ARE NOT PERMITTED WITHOUT APPROVAL OF ENGINEER.
15. ALL MATERIALS AND WORK SHALL CONFORM TO THE CODE LISTED IN THESE DRAWINGS. THESE NOTES GIVE MINIMUM REQUIREMENTS. WHERE CONFLICTS ARISE BETWEEN THE CODE, THE DRAWINGS, AND THE STRUCTURAL NOTES, THE MORE STRINGENT REQUIREMENT SHALL CONTROL.
16. INTERIOR STUD DEPTHS SHALL BE PER THE ARCHITECTURAL DRAWINGS. SIZE STUDS IN ACCORDANCE WITH THE MANUFACTURER'S STANDARD NON-COMPOSITE NON-LOAD BEARING STUD TABLES FOR 5 PSF LATERAL LOAD AND L/360 DEFLECTION.

1 TYPICAL LIGHT GAGE FRAMING DETAILS

RTM ENGINEERING CONSULTANTS, LLC
3045 S. KANSAS EXPRESSWAY
SPRINGFIELD, MO 65807
PHONE 417.708.9315
engineering consultants MO C of A 2014035826

STATE OF MISSOURI
MICHAEL L. KEHOE, GOVERNOR

STATE OF MISSOURI — CHARLES M. TAYLOR — NUMBER PE-2017014241 — PROFESSIONAL ENGINEER — 6/11/2025

Charles M. Taylor, PE
Lic. No. PE 2017014241
PROFESSIONAL SEAL

GHN ARCHITECTS + ENGINEERS
300 South Jefferson Avenue, Suite 301, Springfield, MO 65806
P: 417.869.0719 | F: 417.869.3044 | W: www.ghnae.com

OFFICE OF ADMINSTRATION
DIVISION OF FACILITIES MANAGEMENT, DESIGN AND CONSTRUCTION

DEPT. OF PUBLIC SAFETY
MISSOURI NATIONAL GUARD
DEPT. OF ADJUTANT GENERAL

CONSTRUCT NEW
44 SOLDIER BARRACKS
BUILDING 757

CAMP CROWDER
TRAINING SITE
890 RAY A CARVER DRIVE
NEOSHO, MISSOURI

PROJECT # T2234-01
SITE # 6260
ASSET # 8136260012

REVISION:
DATE:
REVISION:
DATE:
REVISION:
DATE:
ISSUE DATE: 6/11/2025

CAD DWG FILE:
DRAWN BY: CAW
CHECKED BY: CMT
DESIGNED BY:

SHEET TITLE:

GENERAL NOTES & DETAILS - LGMF

SHEET NUMBER:

S-001

22 OF 32 SHEETS
JUNE 11, 2025

STATEMENT OF SPECIAL INSPECTIONS

1. SPECIAL INSPECTIONS ARE REQUIRED FOR THIS STRUCTURE IN ACCORDANCE WITH CHAPTER 17 OF THE INTERNATIONAL BUILDING CODE FOR THE ITEMS NOTED IN THE TABLE ON THIS SHEET.
2. TESTING SHALL BE PERFORMED BY A QUALIFIED TESTING LABORATORY RETAINED BY THE OWNER AND APPROVED BY THE ENGINEER.
3. A LETTER OF SUBSTANTIAL COMPLETION SHALL BE SUBMITTED TO THE BUILDING DEPARTMENT BY THE SPECIAL INSPECTION PROVIDER PRIOR TO THE FINAL INSPECTION.

IBC TABLE 1705.6 REQUIRED VERIFICATION AND INSPECTION OF SOILS

VERIFICATION AND INSPECTION TASK	CONTINUOUS	PERIODIC
1. VERIFY MATERIALS BELOW SHALLOW FOUNDATIONS ARE ADEQUATE TO ACHIEVE THE DESIGN BEARING CAPACITY.	—	X
2. VERIFY EXCAVATIONS ARE EXTENDED TO PROPER DEPTH AND HAVE REACHED PROPER MATERIAL.	—	X
3. PERFORM CLASSIFICATION AND TESTING OF COMPACTED FILL MATERIALS.	—	X
4. VERIFY USE OF PROPER MATERIALS, DENSITIES AND LIFT THICKNESSES DURING PLACEMENT AND COMPACTION OF COMPACTED FILL.	X	—
5. PRIOR TO PLACEMENT OF COMPACTED FILL, INSPECT SUBGRADE AND VERIFY THAT SITE HAS BEEN PREPARED PROPERLY.	—	X

IBC TABLE 1705.3 REQUIRED VERIFICATION AND INSPECTION OF CONCRETE CONSTRUCTION

VERIFICATION AND INSPECTION	CONTINUOUS	PERIODIC	REFERENCED STANDARD	IBC REFERENCE
1. INSPECT REINFORCEMENT, INCLUDING PRESTRESSING TENDONS, AND VERIFY PLACEMENT.	—	X	ACI 318 CH. 20, 25.2,25.3, 26.6.1-26.6.3	1908.4
2. REINFORCING BAR WELDING: A. VERIFY WELDABILITY OF REINFORCING BARS OTHER THAN ASTM A706; B. INSPECT SINGLE-PASS FILLET WELDS, MAXIMUM 5/16"; AND C. INSPECT ALL OTHER WELDS	— X X	X X	AWS D1.4 ACI 318: 26.6.4	—
3. INSPECT ANCHORS CAST IN CONCRETE.	—	X	ACI 318: 17.8.2	—
4. INSPECT ANCHORS POST-INSTALLED IN HARDENED CONCRETE MEMBERS. A. ADHESIVE ANCHORS INSTALLED IN HORIZONTALLY OR UPWARDLY INCLINED ORIENTATIONS TO RESIST SUSTAINED TENSION LOADS. B. MECHANICAL ANCHORS AND ADHESIVE ANCHORS NOT DEFINED IN 4.	X	— X	ACI 318: 17.8.2.4 ACI 318: 17.8.2	—
5. VERIFY USE OF REQUIRED DESIGN MIX.	—	X	ACI 318: CH. 19, 26.4.3, 26.4.4	1904.1, 1904.2, 1908.2, 1908.3
6. PRIOR TO CONCRETE PLACEMENT, FABRICATE SPECIMENS FOR STRENGTH TESTS, PERFORM SLUMP AND AIR CONTENT TESTS, AND DETERMINE THE TEMPERATURE OF THE CONCRETE.	X	—	ASTM C 172 ASTM C 31 ACI 318: 26.5, 26.12	1908.10
7. INSPECTION OF CONCRETE AND SHOTCRETE PLACEMENT FOR PROPER APPLICATION TECHNIQUES.	X	—	ACI 318: 26.5	1908.6, 1908.7, 1908.8
8. VERIFY MAINTENANCE OF SPECIFIED CURING TEMPERATURE AND TECHNIQUES.	—	X	ACI 318: 26.5.3-26.5.5	1910.9
9. INSPECT PRESTRESSED CONCRETE FOR: A. APPLICATION OF PRESTRESSING FORCES; AND B. GROUTING OF BONDED PRESTRESSING TENDONS.	X X	— —	ACI 318: 26.10	—
10. INSPECT ERECTION OF PRECAST CONCRETE MEMBERS.	—	X	ACI 318: CH. 26.9	—
11. VERIFY IN-SITU CONCRETE STRENGTH, PRIOR TO STRESSING OF TENDONS IN POST-TENSIONED CONCRETE AND PRIOR TO REMOVAL OF SHORES AND FORMS FROM BEAMS AND STRUCTURAL SLABS.	—	X	ACI 318: 26.11.2	—
12. INSPECT FORMWORK FOR SHAPE, LOCATION AND DIMENSIONS OF THE CONCRETE MEMBER BEING FORMED.	—	X	ACI 318: 26.11.1.2(b)	—

REQUIRED VERIFICATION AND INSPECTION OF STEEL CONSTRUCTION OTHER THAN STRUCTURAL STEEL

VERIFICATION AND INSPECTION	CONTINUOUS	PERIODIC	REFERENCED STANDARD
1. MATERIAL VERIFICATION OF COLD-FORMED STEEL DECK:			
A. IDENTIFICATION MARKINGS TO CONFORM TO ASTM STANDARDS SPECIFIED IN THE APPROVED CONSTRUCTION DOCUMENTS.	—	X	APPLICABLE ASTM MATERIAL STANDARDS
B. MANUFACTURER'S CERTIFIED TEST REPORTS	—	X	
2. INSPECTION OF WELDING:			
A. COLD-FORMED STEEL DECK:			
a. FLOOR AND ROOF DECK WELDS.	—	X	AWS D1.3
B. REINFORCING STEEL:			
a. VERIFICATION OF WELDABILITY OF REINF STEEL OTHER THAN ASTM A 706.	—	X	AWS D1.4 ACI 318: SECTION 3.5.2
b. REINFORCING STEEL RESISTING FLEXURAL AND AXIAL FORCES IN INTERMEDIATE AND SPECIAL MOMENT FRAMES, AND BOUNDARY ELEMENTS OF SPECIAL STRUCTURAL WALLS OF CONCRETE AND SHEAR REINFORCEMENT.	X	—	
c. SHEAR REINFORCEMENT.	X	—	
d. OTHER REINFORCING STEEL.	—	X	

AISC 360-10 REQUIRED VERIFICATION AND INSPECTION OF STEEL CONSTRUCTION

VERIFICATION AND INSPECTION	CONTINUOUS	PERIODIC	REFERENCED STANDARD
1. MATERIAL VERIFICATION OF HIGH-STRENGTH BOLTS, NUTS AND WASHERS:			
A. IDENTIFICATION MARKINGS TO CONFORM TO ASTM STANDARDS SPECIFIED IN THE APPROVED CONSTRUCTION DOCUMENTS.	—	X	APPLICABLE ASTM MATERIAL SPECIFICATIONS; AISC 360, SECTION A3
B. MANUFACTURER'S CERTIFICATE OF COMPLIANCE REQUIRED.	—	X	—
2. INSPECTION OF HIGH-STRENGTH BOLTING:			
A. BEARING-TYPE CONNECTIONS.	—	X	AISC 360, SECTION N5.6
B. SLIP-CRITICAL CONNECTIONS.	X	X	AISC 360, SECTION N5.6, TABLES N5.6-1, 2 & 3
3. MATERIAL VERIFICATION OF STRUCTURAL STEEL:			
A. IDENTIFICATION MARKINGS TO CONFORM TO ASTM STANDARDS SPECIFIED IN THE APPROVED CONSTRUCTION DOCUMENTS.	—	—	ASTM A 6 OR ASTM A 568
B. MANUFACTURERS' CERTIFIED MILL TEST REPORTS.	—	—	ASTM A 6 OR ASTM A 568
4. MATERIAL VERIFICATION OF WELD FILLER MATERIALS:			
A. IDENTIFICATION MARKINGS TO CONFORM TO AWS SPECIFICATION IN THE APPROVED CONSTRUCTION DOCUMENTS.	—	—	AISC 360, SECTION A3.5
B. MANUFACTURER'S CERTIFICATE OF COMPLIANCE REQUIRED.	—	—	—
5. INSPECTION OF WELDING:			AISC 360 SECTION N5.4, TABLES N5.4-1, 2 & 3
A. STRUCTURAL STEEL:			
a. COMPLETE AND PARTIAL PENETRATION GROOVE WELDS.	X	—	AWS D1.1
b. MULTIPASS FILLET WELDS.	X	—	
c. SINGLE-PASS FILLET WELDS > 5/16	X	—	
d. SINGLE-PASS FILLET WELDS ≤ 5/16	—	X	
e. FLOOR AND ROOF DECK WELDS.	—	X	AWS D1.3
B. REINFORCING STEEL:			
a. VERIFICATION OF WELDABILITY OF REINF STEEL OTHER THAN ASTM A 706.	—	X	AWS D1.4 OR ACI 318: 26.6.4
b. REINFORCING STEEL-RESISTING FLEXURAL AND AXIAL FORCES IN INTERMEDIATE AND SPECIAL MOMENT FRAMES, AND BOUNDARY ELEMENTS OF SPECIAL REINFORCED CONCRETE SHEAR WALLS AND SHEAR REINFORCEMENT.	X	—	
c. SHEAR REINFORCEMENT.	X	—	—
d. OTHER REINFORCING STEEL.	—	X	—
6. INSPECTION OF STEEL FRAME JOINT DETAILS FOR COMPLIANCE WITH APPROVED CONSTRUCTION DOCUMENTS:			AISC 360 SECTION N5.8
A. DETAILS SUCH AS BRACING AND STIFFENING.	—	X	
B. MEMBER LOCATIONS.	—	—	
C. APPLICATION OF JOINT DETAILS AT EACH CONNECTION.	—	—	

SCHEDULE - SPECIAL INSPECTIONS 2018

RTM ENGINEERING CONSULTANTS, LLC
3045 S. KANSAS EXPRESSWAY
SPRINGFIELD, MO 65807
PHONE: 417.708.9315
engineering consultants MO C of A 2014035826

STATE OF MISSOURI
MICHAEL L. KEHOE,
GOVERNOR

STATE OF MISSOURI
CHARLES M. TAYLOR
NUMBER
PE-2017014241
PROFESSIONAL ENGINEER
6/11/2025

Charles M. Taylor, PE
Lic. No. PE 2017014241

PROFESSIONAL SEAL

GHN ARCHITECTS + ENGINEERS
300 South Jefferson Avenue, Suite 301, Springfield, MO 65806
P: 417.869.0719 | F: 417.869.3044 | W: www.ghnae.com

OFFICE OF
ADMINSTRATION
DIVISION OF FACILITIES
MANAGEMENT, DESIGN
AND CONSTRUCTION

DEPT. OF PUBLIC SAFETY
MISSOURI NATIONAL GUARD
DEPT. OF ADJUTANT GENERAL

CONSTRUCT NEW
44 SOLDIER BARRACKS
BUILDING 757

CAMP CROWDER
TRAINING SITE
890 RAY A CARVER DRIVE
NEOSHO, MISSOURI

PROJECT # T2234-01
SITE # 6260
ASSET # 8136260012

REVISION:
DATE:
REVISION:
DATE:
REVISION:
DATE:
ISSUE DATE: 6/11/2025

CAD DWG FILE:
DRAWN BY: CAW
CHECKED BY: CMT
DESIGNED BY:

SHEET TITLE:

SPECIAL
INSPECTIONS

SHEET NUMBER:

S-002

23 OF 32 SHEETS
JUNE 11, 2025

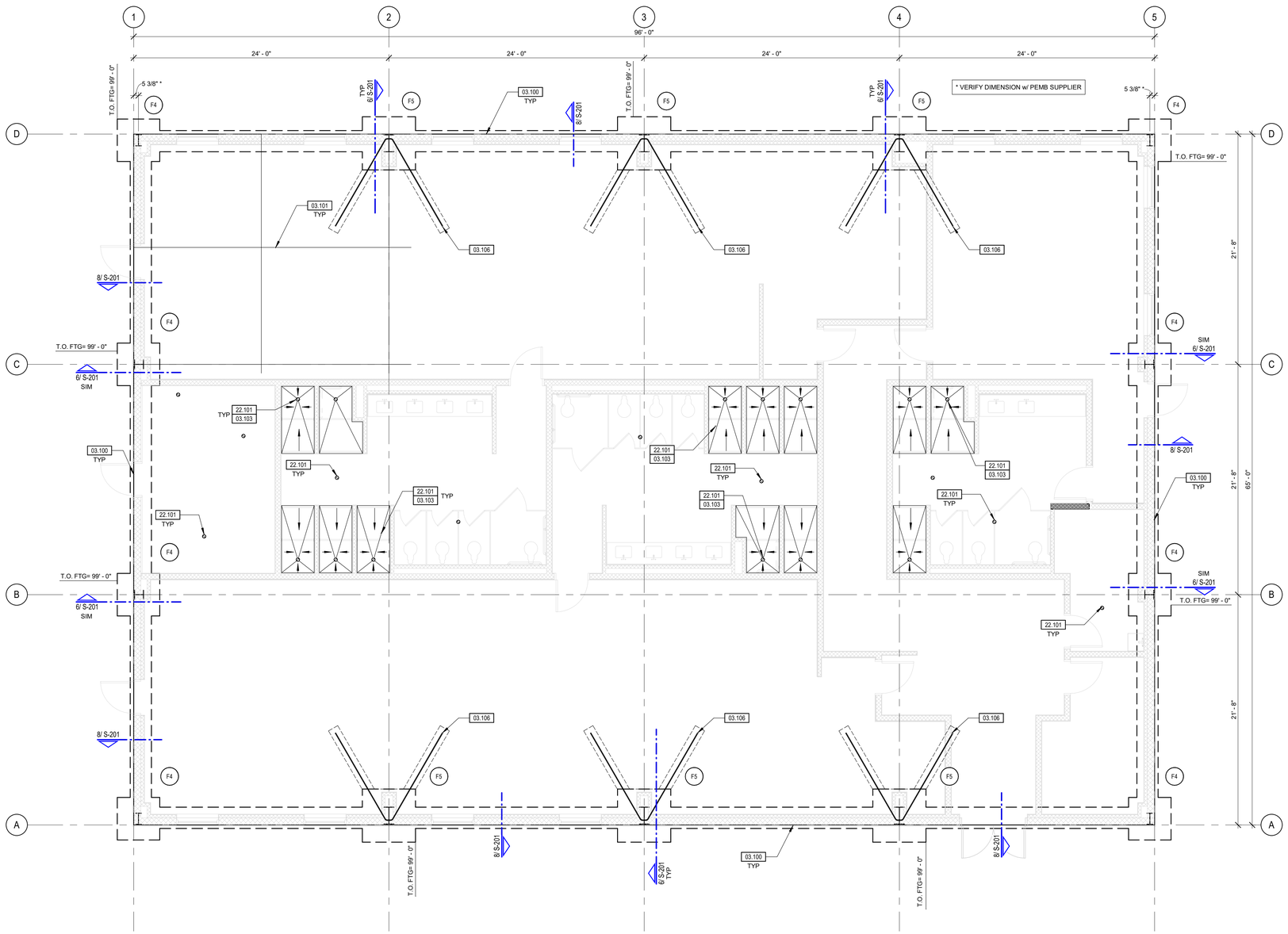

1 FOUNDATION PLAN
3/16" = 1'-0"

PLAN NOTES - FOUNDATION

1. TOP OF SLAB ELEVATION = 100'-0".
2. ALL TOP OF EXTERIOR FOOTING ELEVATIONS SHALL BE 99'-0" U.N.O.
3. ALL TOP OF GRADE BEAM ELEVATIONS SHALL BE 99'-0" U.N.O.
4. COORDINATE ALL DIMENSIONS AND ELEVATIONS WITH ARCHITECTURAL PRIOR TO CONSTRUCTION.
5. NOT ALL PENETRATIONS ARE SHOWN ON STRUCTURAL DRAWINGS. COORDINATE ALL SLAB AND FOUNDATION PENETRATIONS WITH OTHER DISCIPLINES AND NOTIFY ENGINEER IF ANY CONFLICTS ARE NOTED.
6. UTILITIES SHALL PASS ABOVE OR BELOW PERIMETER FOOTINGS PER PIPE PENETRATION DETAIL.
7. SEE ARCHITECTURAL DRAWINGS FOR SLAB FINISH REQUIREMENTS.
8. SLOPE FLOORS TO FLOOR DRAINS, COORDINATE SLOPE EXTENTS WITH ARCH AND MEP.
9. DOWEL ALL SIDEWALKS AT DOORS TO BUILDING SLABS W/ #4 x 24" LONG DOWELS @ 12" O.C. MAX.
10. PROVIDE SLAB JOINTS PER CONCRETE SLAB JOINTS DETAIL AND GENERAL FOUNDATION NOTES.
11. PROVIDE ADDITIONAL REINFORCING PER TYPICAL SLAB ON GRADE REINFORCING DETAILS.
12. PROVIDE SLAB BLOCKOUTS PER ISOLATION JOINT DETAILS AT RECESSED COLUMN LOCATIONS.
13. WHERE ONLY ONE CURTAIN OF REINFORCING IS REQUIRED, BARS SHALL BE CENTERED IN WALL.
14. PROVIDE CONTINUOUS REINFORCING IN ALL CONCRETE CONSTRUCTION, SEE TYPICAL CORNER BAR REINFORCING DETAIL.
15. PERIMETER INSULATION SHALL BE AS REQUIRED BY ARCHITECTURAL DRAWINGS.
16. SEE THE GEOTECHNICAL INVESTIGATION REPORT FOR SITE PREPARATION REQUIREMENTS.

SHALLOW FOOTING SCHEDULE

NOTE: FOOTINGS ARE CENTERED ON COLUMNS UNLESS NOTED OTHERWISE.

MARK	FOOTING SIZE	REINFORCING	NOTES
F4	4'-0"x4'-0"x2'-0"	(5) #5's E.W. T&B	
F5	5'-0"x5'-0"x2'-0"	(6) #5's E.W. T&B	

KEYNOTE LEGEND

KEYNOTE	DESCRIPTION
03.100	DARK LINE INDICATES SLAB EDGE.
03.101	LINE INDICATES SLAB CONTROL JOINTS. REFER TO CONCRETE SLAB JOINTS DETAIL FOR REQUIREMENTS, SHOWN IN ONE BAY ONLY FOR CLARITY.
03.103	RECESS & SLOPE SLAB @ SHOWERS AS REQUIRED. SEE ARCH. & MEP PLANS FOR ADDITIONAL INFORMATION.
03.106	HAIRPIN PER 7/S-201.
22.101	SHOWER DRAIN. RECESS 3/4". REFER TO PLUMBING DRAWING FOR EXACT SIZE, DETAILS AND LOCATIONS. SLOPE SLAB IN SHOWER TO DRAIN.

STATE OF MISSOURI
MICHAEL L. KEHOE,
GOVERNOR

STATE OF MISSOURI
CHARLES M. TAYLOR
NUMBER
PE-2017014241
PROFESSIONAL ENGINEER
6/11/2025

Charles M. Taylor, PE
Lic. No. PE 2017014241

PROFESSIONAL SEAL

GHN ARCHITECTS + ENGINEERS
300 South Jefferson Avenue, Suite 301, Springfield, MO 65806
P: 417.869.0719 | F: 417.869.3044 | W: www.ghnae.com

OFFICE OF
ADMINSTRATION
DIVISION OF FACILITIES
MANAGEMENT, DESIGN
AND CONSTRUCTION

DEPT. OF PUBLIC SAFETY
MISSOURI NATIONAL GUARD
DEPT. OF ADJUTANT GENERAL

CONSTRUCT NEW
44 SOLDIER BARRACKS
BUILDING 757

CAMP CROWDER
TRAINING SITE
890 RAY A CARVER DRIVE
NEOSHO, MISSOURI

PROJECT # T2234-01
SITE # 6260
ASSET # 8136260012

REVISION:
DATE:
REVISION:
DATE:
REVISION:
DATE:
ISSUE DATE: 6/11/2025

CAD DWG FILE:
DRAWN BY: CAW
CHECKED BY: CMT
DESIGNED BY:

SHEET TITLE:

FOUNDATION
PLAN

SHEET NUMBER:

S-101

24 OF 32 SHEETS
JUNE 11, 2025

rtm engineering consultants
RTM ENGINEERING CONSULTANTS, LLC
3045 S. KANSAS EXPRESSWAY
SPRINGFIELD, MO 65807
PHONE: 417.708.9315
MO C of A 2014035826

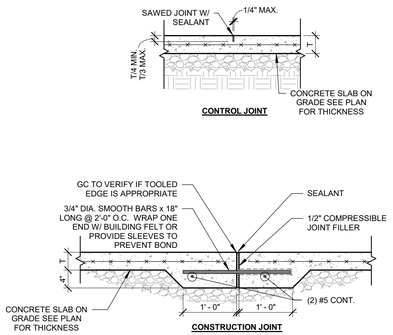

1 CONCRETE SLAB JOINTS
3/4" = 1'-0"

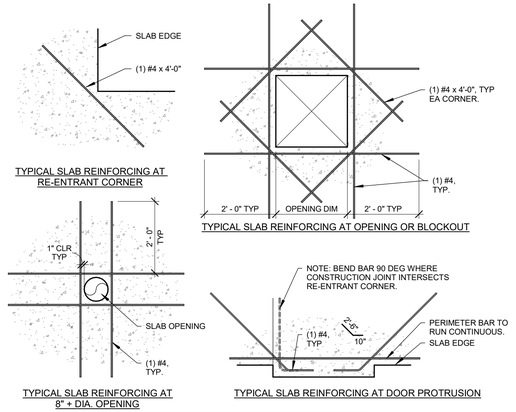

NOTE: LOCATE ALL REINFORCING AT MID-DEPTH OF SLAB.

2 TYPICAL SLAB ON GRADE REINFORCING DETAILS
1/2" = 1'-0"

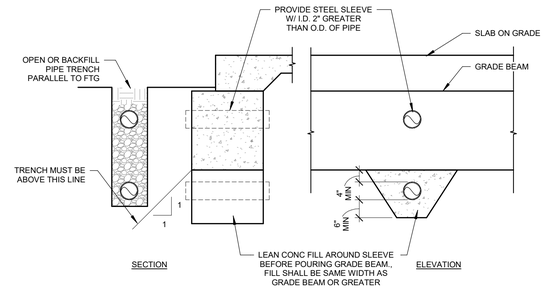

3 PIPE PENETRATION DETAIL
N.T.S.

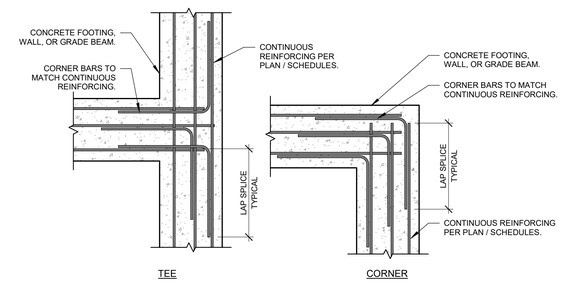

4 TYPICAL CORNER BAR REINFORCING
3/4" = 1'-0"

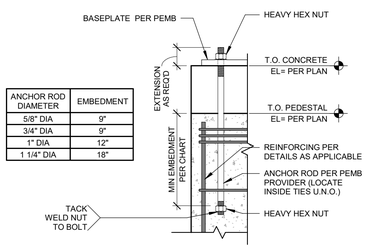

ANCHOR ROD DIAMETER	EMBEDMENT
5/8" DIA	9"
3/4" DIA	9"
1" DIA	12"
1 1/4" DIA	18"

5 ANCHOR ROD FOR PEMB - SLAB BEARING
1" = 1'-0"

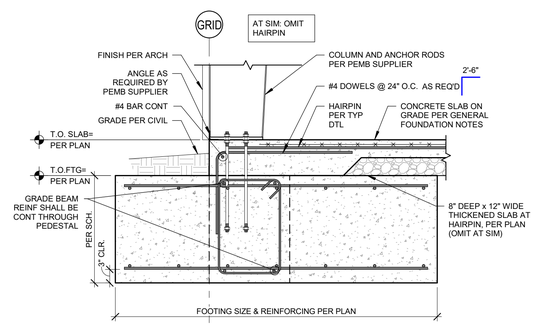

6 FOUNDATION AT METAL BUILDING COLUMN
3/4" = 1'-0"

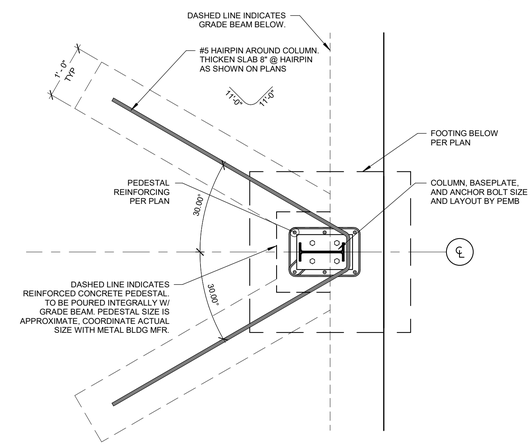

7 HAIRPIN DETAIL
3/4" = 1'-0"

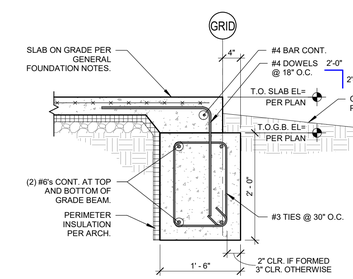

8 TYPICAL 18" GRADE BEAM DETAIL
3/4" = 1'-0"

NOTE:

1. MAX. STEP HEIGHT OF 2' - 6" U.N.O.
2. PROVIDE TENSION LAP SPLICE BASED ON SIZE OF REBAR. REFER TO "LAP SPLICE LENGTHS" TABLE.

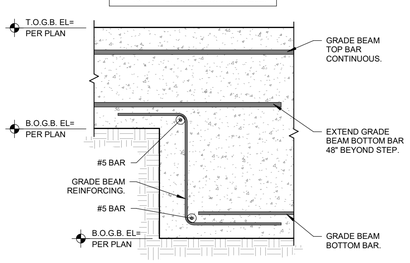

9 TYPICAL STEP AT BOTTOM OF GRADE BEAM
3/4" = 1'-0"

STATE OF MISSOURI
MICHAEL L. KEHOE,
GOVERNOR

STATE OF MISSOURI
CHARLES M. TAYLOR
NUMBER PE-2017014241
PROFESSIONAL ENGINEER
6/11/2025

Charles M. Taylor, PE
Lic. No. PE 2017014241
PROFESSIONAL SEAL

GHN ARCHITECTS + ENGINEERS
300 South Jefferson Avenue, Suite 301, Springfield, MO 65806
P: 417.869.0719 | F: 417.869.3044 | W: www.ghnae.com

OFFICE OF
ADMINSTRATION
DIVISION OF FACILITIES
MANAGEMENT, DESIGN
AND CONSTRUCTION

DEPT. OF PUBLIC SAFETY
MISSOURI NATIONAL GUARD
DEPT. OF ADJUTANT GENERAL

CONSTRUCT NEW
44 SOLDIER BARRACKS
BUILDING 757

CAMP CROWDER
TRAINING SITE
890 RAY A CARVER DRIVE
NEOSHO, MISSOURI

PROJECT # T2234-01
SITE # 6260
ASSET # 8136260012

REVISION:
DATE:
REVISION:
DATE:
REVISION:
DATE:
ISSUE DATE: 6/11/2025

CAD DWG FILE:
DRAWN BY: CAW
CHECKED BY: CMT
DESIGNED BY:

SHEET TITLE:

FOUNDATION DETAILS

SHEET NUMBER:

S-201

25 OF 32 SHEETS
JUNE 11, 2025

RTM ENGINEERING CONSULTANTS, LLC
3045 S. KANSAS EXPRESSWAY
SPRINGFIELD, MO 65807
PHONE: 417.708.9315
engineering consultants MO C of A 2014035826

KEYNOTES:

1. WALL PACKS SHALL BE MOUNTED AT APPROXIMATELY 9'-0". REFER TO LIGHTING PLAN FOR CIRCUITRY.

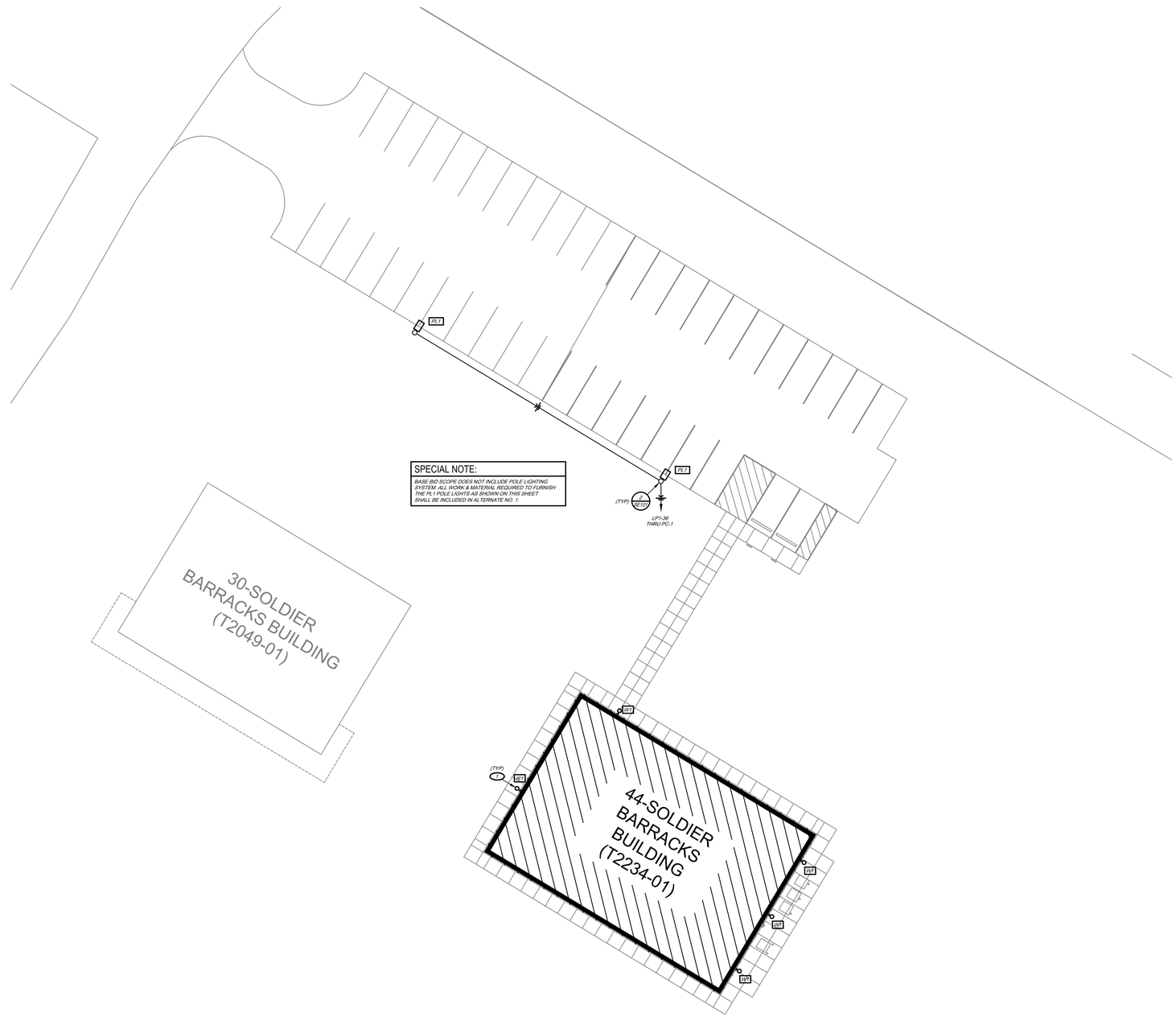

SPECIAL NOTE:

BASE BID SCOPE DOES NOT INCLUDE POLE LIGHTING SYSTEM. ALL WORK & MATERIAL REQUIRED TO FURNISH THE PL 1 POLE LIGHTS AS SHOWN ON THIS SHEET SHALL BE INCLUDED IN ALTERNATE NO. 1.

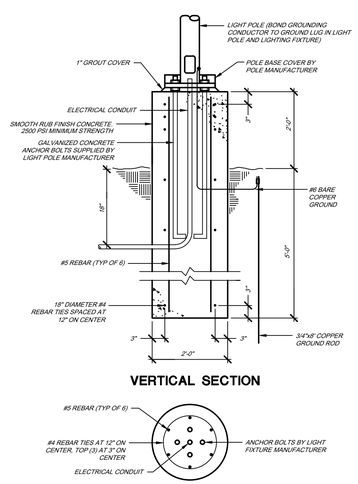

2 LIGHT POLE CONCRETE BASE
NO SCALE

1 SITE LIGHTING PLAN
1" = 20'-0"

NORTH

STATE OF MISSOURI
MICHAEL L. KEHOE,
GOVERNOR

STATE OF MISSOURI
RYAN S. JONES
PE-2004017193
PROFESSIONAL ENGINEER

06-12-25

RYAN S. JONES – ENGINEER
PE–2004017193

Missouri State Certificate of Authority #2005026903

CJD
Engineering | Energy | Innovation
2225 West Chesterfield Boulevard, Suite 200
Springfield, MO 65807
P: 417.877.1700 F: 417.324.7735
www.cjd-eng.com

OFFICE OF ADMINISTRATION DIVISION OF FACILITIES MANAGEMENT, DESIGN AND CONSTRUCTION

DEPT. OF PUBLIC SAFETY MISSOURI NATIONAL GUA DEPT. OF ADJUTANT GENER

CONSTRUCT NEW
44 SOLDIER BARRACKS
BUILDING 757

CAMP CROWDER
TRAINING SITE
890 RAY A CARVER DRIVE
NEOSHO, MISSOURI

PROJECT # T2234-01
SITE # 6260
ASSET # 8136260012

REVISION:
DATE:
REVISION:
DATE:
REVISION:
DATE:
ISSUE DATE: 06/12/2025

CAD DWG FILE: T2234-01-6260-813623001
DRAWN BY: TKB
CHECKED BY: RSJ
DESIGNED BY: TKB

SHEET TITLE:

SITE LIGHTING PLAN

SHEET NUMBER:

SE-101

26 OF 32 SHEETS
JUNE 12, 2025

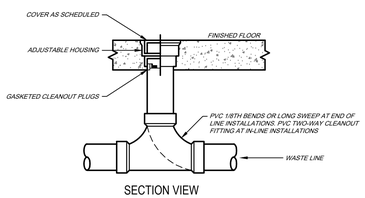

5 FINISH FLOOR CLEANOUT DETAIL
NO SCALE

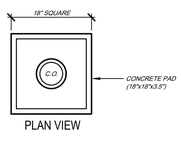

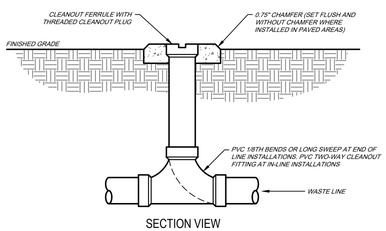

4 FINISH GRADE CLEANOUT DETAIL
NO SCALE

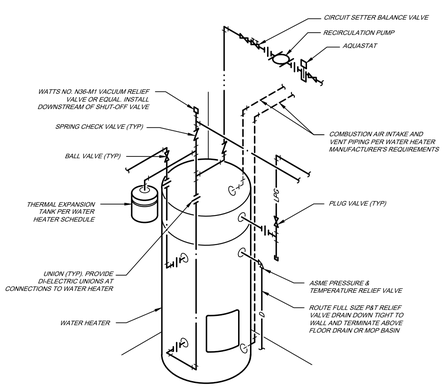

3 GAS WATER HEATER DETAIL
NO SCALE

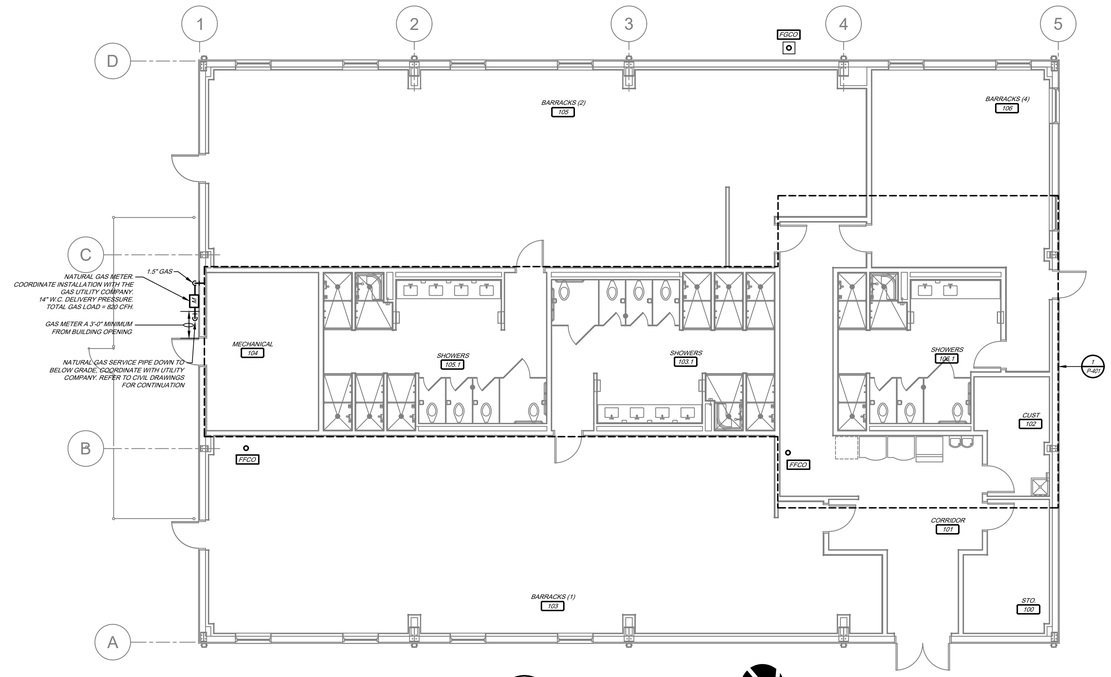

2 PLUMBING PLAN
1/8" = 1'-0"

NORTH

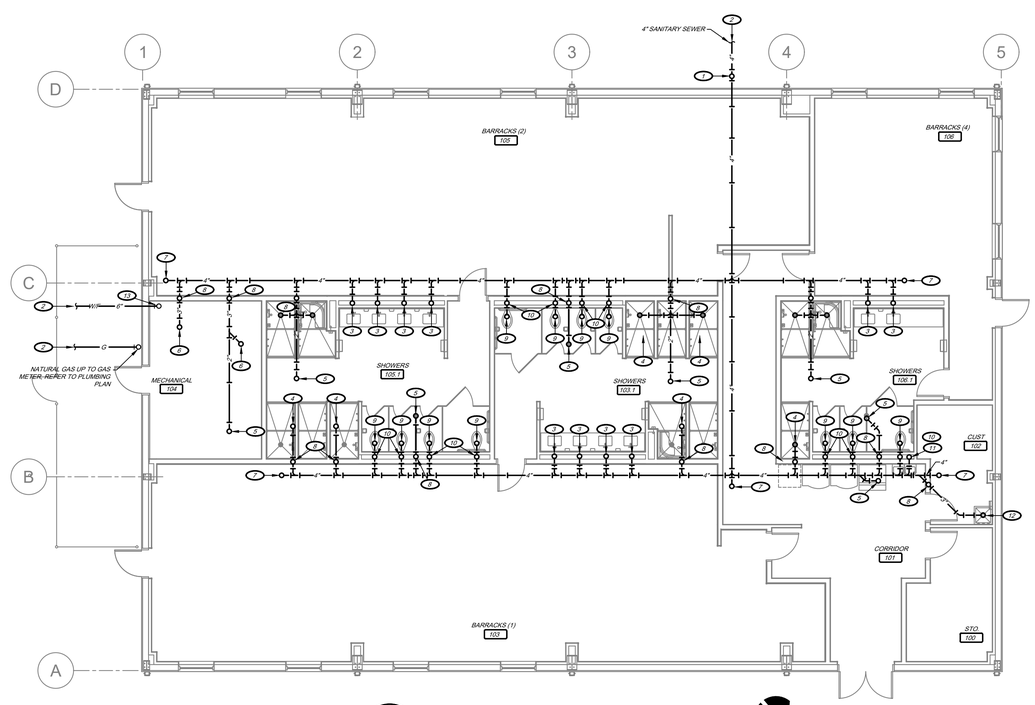

1 UNDERFLOOR PLUMBING PLAN
1/8" = 1'-0"

NORTH

KEYNOTES:

1. 4" WASTE UP TO FINISH GRADE CLEANOUT.
2. SERVICES SHALL BE INSTALLED 5'-0" OUTSIDE BUILDING. REFER TO CIVIL DRAWINGS FOR CONTINUATION.
3. 2" WASTE UP TO LAVATORY.
4. 2" TRAPPED WASTE UP TO SHOWER DRAIN.
5. 2" TRAPPED WASTE UP TO FLOOR DRAIN.
6. 3" TRAPPED WASTE UP TO FLOOR DRAIN.
7. 4" WASTE UP TO FINISHED FLOOR CLEANOUT.
8. 1.5" VENT UP.
9. 4" WASTE UP TO WATER CLOSET.
10. 2" VENT UP.
11. 2" WASTE UP TO DRINKING FOUNTAIN.
12. 3" TRAPPED WASTE UP TO MOP SINK.
13. COMBINATION WATER/FIRE SERVICE PIPING UP.

PLUMBING GENERAL NOTES:

1. REFER TO SPECIFICATIONS FOR ADDITIONAL REQUIREMENTS.
2. PLANS ARE DIAGRAMMATIC AND SHALL NOT BE SCALED. REFER TO ARCHITECTURAL DRAWINGS FOR DIMENSIONS.
3. PIPING LAYOUTS ARE DIAGRAMMATIC. FIELD COORDINATE EXACT LOCATIONS AND ROUTINGS WITH STRUCTURE, DUCTWORK, LIGHT FIXTURES, CONDUITS, ETC.
4. COOPERATE CLOSELY WITH ALL OTHER TRADES TO EXPEDITE CONSTRUCTION AND AVOID INTERFERENCES AND CONFLICTS. BEFORE ANY PIPING, DUCTWORK, CONDUIT, ETC. IS INSTALLED, IT SHALL BE COORDINATED CAREFULLY BETWEEN ALL TRADES.
5. COORDINATE WITH ALL CONTRACTORS TO MAINTAIN ALL CLEARANCES REQUIRED FOR EQUIPMENT. DO NOT ROUTE PIPING, DUCTWORK, ETC. ABOVE ELECTRICAL PANELS.
6. CONTRACTOR SHALL MAKE ALL FINAL CONNECTIONS TO EQUIPMENT. PROVIDE ADAPTER AND FITTINGS FOR ALL EQUIPMENT AS REQUIRED. COORDINATE SPECIFIC REQUIREMENTS WITH EQUIPMENT SUPPLIER. REFER TO EQUIPMENT TEMPLATES / DRAWINGS FOR ADDITIONAL INFORMATION.
7. ALL MATERIALS IN PLENUMS SHALL BE NON COMBUSTIBLE PLENUM RATED.
8. ROOF CONTRACTOR SHALL BE RESPONSIBLE FOR ALL ROOF PENETRATIONS AND FLASHING REQUIREMENTS TO MAINTAIN ROOF WARRANTY. COORDINATE CLOSELY WITH ROOF CONTRACTOR ALL ROOF REQUIREMENTS.
9. DRAWINGS ARE NOT SET UP SPECIFICALLY ACCORDING TO TRADE AND EACH CONTRACTOR AND SUB-CONTRACTOR OR TRADE IS REQUIRED TO REVIEW THE CONSTRUCTION DOCUMENTS AS A WHOLE AND PROVIDE ANY MISC. ITEMS, MATERIALS, WORK, ETC. REQUIRED TO COMPLETE THE WORK AS SHOWN ON ALL DOCUMENTS. THIS REQUIREMENT APPLIES TO ALL TRADES, STRUCTURAL, MECHANICAL, ELECTRICAL, AND PLUMBING REQUIREMENTS AND RELATED WORK ARE INDICATED THROUGHOUT THE DOCUMENTS AND SHOULD BE REVIEWED WITH THE SPECIFIC MEP AND STRUCTURAL DRAWINGS FOR OVERALL SCOPE OF WORK.
10. SEAL AROUND ALL FIRE RATED WALLS WITH FIRE STOPPING/CAULKING TO MAINTAIN FIRE RATING. REFER TO ARCHITECTURAL DRAWINGS FOR FIRE RATINGS.
11. PROVIDE UNISTRUTS AND ACCESSORIES AS REQUIRED FOR SUPPORT OF PIPING, EQUIPMENT, ETC.
12. ALL EXPOSED PIPING, SUPPORTS, ETC. SHALL BE PRIMED AND PAINTED PER THE SPECIFICATIONS.

PLUMBING SYMBOLS:

- SANITARY WASTE PIPING BELOW SLAB
- SANITARY WASTE PIPING ABOVE SLAB
- SANITARY COMBINATION WASTE AND VENT PIPING
- RD — PRIMARY ROOF DRAIN PIPING BELOW SLAB
- RD — PRIMARY ROOF DRAIN PIPING ABOVE SLAB
- SRD — SECONDARY ROOF DRAIN PIPING ABOVE SLAB
- DOMESTIC COLD WATER PIPING
- DOMESTIC HOT WATER PIPING
- DOMESTIC HOT WATER RETURN PIPING
- F — FIRE SPRINKLER PIPING
- PLUMBING VENT PIPING
- D — CONDENSATE DRAIN PIPING
- LPG — PROPANE GAS PIPING
- A — COMPRESSED AIR
- FO — FUEL OIL
- SHUT-OFF VALVE
- BALANCE VALVE
- UNION
- CHECK VALVE
- SA — SHOCK ABSORBER
- PRESSURE GAUGE
- TEE / ELBOW DOWN WITH VALVE IN VERTICAL PIPE
- FPWH — HB1 — FREEZEPROOF WALL HYDRANT / HOSE BIBB
- BFP — BACKFLOW PREVENTER
- PR — PRESSURE REGULATOR
- FD1 — FLOOR DRAIN
- FGCO — FINISH GRADE CLEANOUT
- FFCO — FINISH FLOOR CLEANOUT
- FWCO — FINISH WALL CLEANOUT

STATE OF MISSOURI
MICHAEL L. KEHOE,
GOVERNOR

STATE OF MISSOURI — RYAN S. JONES — PE-2004017193 — PROFESSIONAL ENGINEER

06-12-25

RYAN S. JONES – ENGINEER
PE–2004017193

Missouri State Certificate of Authority #2005026903

CJD
Engineering | Energy | Innovation
2225 West Chesterfield Boulevard, Suite 200
Springfield, MO 65807
P: 417.877.1700 F: 417.324.7735
www.cjd-eng.com

OFFICE OF ADMINISTRATION DIVISION OF FACILITIES MANAGEMENT, DESIGN AND CONSTRUCTION

DEPT. OF PUBLIC SAFETY MISSOURI NATIONAL GUA DEPT. OF ADJUTANT GENE

CONSTRUCT NEW
44 SOLDIER BARRACKS
BUILDING 757

CAMP CROWDER
TRAINING SITE
890 RAY A CARVER DRIVE
NEOSHO, MISSOURI

PROJECT # T2234-01
SITE # 6260
ASSET # 8136260012

REVISION:
DATE:
REVISION:
DATE:
REVISION:
DATE:
ISSUE DATE: 06/12/2025

CAD DWG FILE: T2234-01-6260-8136230012
DRAWN BY: TKB
CHECKED BY: RSJ
DESIGNED BY: TKB

SHEET TITLE:
PLUMBING PLANS

SHEET NUMBER:
P-101

27 OF 32 SHEETS
JUNE 12, 2025

PIPING MATERIAL SCHEDULE

SYSTEM	PIPING SIZE	PIPING TYPE	PIPING SCHEDULE	PIPING GRADE	PIPING ASTM	PIPING MATERIAL	FITTINGS MATERIAL	FITTINGS TYPE	MAXIMUM WORKING PRESSURE (PSI)	MAXIMUM WORKING TEMP (DEG F)	FIELD TEST PRESSURE (PSI)	FIELD TEST TIME (HOURS)	NOTES
CONDENSATE DRAIN ABOVE GRADE	ALL	M	-	-	B88	COPPER	COPPER	DR \ SJ	10 FT	40-70	10 FT	1	-
DOMESTIC WATER ABOVE GRADE	0.5"-3"	L	-	-	B88	COPPER	COPPER	SJ	120	40-180	150	1	7
DOMESTIC WATER BELOW GRADE	ALL	K	-	-	B88	COPPER	COPPER	SJ	120	40-180	150	1	-
DOMESTIC WATER SERVICE BELOW GRADE	ALL	PVC	-	-	AWWA C900	PVC	DI	MJ	200	50-90	200	2	6
FIRE PROTECTION	ALL	PER NFPA 13 AND FIRE SPRINKLER DRAWINGS									200	2	2
FIRE SPRINKLER SERVICE BELOW GRADE	ALL	PER NFPA 13 AND FIRE SPRINKLER DRAWINGS									200	2	-
PROPANE GAS ABOVE GRADE	0.5" - 2.5"	CW	40	A	A53	CS / BLK	MI	THRD	5	--	150	2	-
REFRIGERANT PIPING	ALL	ACR	--	--	B280	CP	CP	SJ	150	40-180	200	4	-
SANITARY WASTE BELOW GRADE	ALL	DWV	40	-	2665	PVC	PVC	DR \ SW	10 FT	50-180	10 FT	1	1
SANITARY WASTE AND VENT - RETURN AIR PLENUMS	ALL	NH	SS	-	A74	CI	CI	DR \ NH	10 FT	50-180	10 FT	1	3
SANITARY WASTE AND VENT ABOVE GRADE	ALL	DWV	40	-	2665	PVC	PVC	DR \ SW	10 FT	50-180	10 FT	1	1,3
TEMPERATURE & PRESSURE RELIEF DRAIN	ALL	M	-	-	B88	COPPER	COPPER	DR \ SJ	10 FT	40-70	10 FT	1	-

NOTES:
1. THE USE OF CELLULAR CORE PVC WASTE AND VENT PIPING IS STRICTLY PROHIBITED.
2. THE USE OF CPVC AND POLYBUTYLENE PIPING IS STRICTLY PROHIBITED.
3. SANITARY WASTE/VENT AND ROOF DRAIN PIPING LOCATED WITHIN RETURN AIR PLENUMS SHALL BE CAST IRON OR SHALL BE ENCLOSED IN A GYPSUM BOARD SOFFIT.
4. NATURAL GAS PIPING INSTALLED IN RETURN AIR PLENUMS AND CONCEALED SPACES SHALL HAVE APPROVED FITTINGS ONLY. VALVES, UNIONS, THREADED FITTINGS, ETC. ARE NOT PERMITTED.
5. NATURAL GAS INSTALLED OUTSIDE SHALL BE PAINTED WITH TWO COATS OF UV RESISTANT ENAMEL PAINT. COLOR TO MATCH WALL COLOR ON EXTERIOR WALL AND YELLOW ON THE ROOF. VERIFY PAINT COLOR WITH ARCHITECT BEFORE INSTALLATION.
6. PROVIDE PIPING MATERIAL PER LOCAL WATER COMPANY REQUIREMENTS IF DIFFERENT THAN SCHEDULED.
7. AT CONTRACTORS OPTION, PEX CROSSLINKED POLYEHTYLENE TUBING MAY BE USED FOR DOMESTIC WATER ABOVE GROUND PIPING. REFER TO SPECIFICATIONS.

APPROVED PIPE & FITTING MANUFACTURERS:
CAST IRON - CHARLOTTE, TYLER, CENTRAL FOUNDRY OR PRE-BID APPROVED EQUAL.
COPPER - CERRO, CHASE, MUELLER, REVERE COPPER OR PRE-BID APPROVED EQUAL.
PEX-B - WATTS, VIEGA, OR PRE-BID APPROVED EQUAL.
PVC (SOLID) - CHARLOTTE, TYLER, CHEMTROL OR PRE-BID APPROVED EQUAL.
CARBON STEEL - ARMCO, YOUNGSTOWN, UNITED STATES STEEL OR PRE-BID APPROVED EQUAL. GROOVED FITTINGS - VICTAULIC, GRUVLOK OR PRE-BID APPROVED EQUAL.

ABBREVIATIONS:
BS - BELL AND SPIGOT
CI - CAST IRON
CS - CARBON STEEL
CW - CONTINUOUS WELD
DI - DUCTILE IRON
DR - DRAINAGE FITTING
FRP - FIBERGLASS REINFORCED
DWV - DRAINAGE WASTE AND VENT
HDPE - HIGH DENSITY POLYETHYLENE
MJ - MECHANICAL JOINT
NG - NEOPRENE GASKET
PI-FRP - PRE-INSULATED FIBERGLASS REINFORCED PLASTIC
RPF-HDPE - RIGID POLYURETHANE INSULATION WITH HDPE JACKET
PEX - PEX CROSSLINKED POLYETHYLENE TUBING
NH - NO-HUB
SJ - 95-5 TIN-ANTIMONY SOLDER JOINT
SS - STANDARD STRENGTH / SERVICE WEIGHT
SW - SOLVENT WELD
TEAH - THERMOSETING EPOXY ADHESIVE WITH HEAT

WATER SOFTENER SCHEDULE

MARK	BASIS OF DESIGN MANUFACTURER	MODEL NO.	NORMAL FLOW RATE (GPM) @ 15PSI LOSS	MAX. FLOW RATE (GPM) @ 25 PSI LOSS	BACKWASH FLOW RATE (GPM)	RESIN VOLUME (CU. FT.)	BACKWASH VOLUME (NOM. GALLONS)	DAILY WATER USAGE (GALLONS)	BRINE TANK SALT CAPACITY (LBS.)	VOLTAGE/ PHASE	ACCESSORIES
WS1	CULLIGAN	CTM-300-DF	70	95	15	10	541	2,500	1,800	120/1	1,2

ACCESSORIES:
1. BASIS OF DESIGN CULLIGAN CONTACT INFORMATION; MARCUS MONTEZ, (417) 434-4091, mmontez@hallswater.com
2. INCLUDE PROGRAMMABLE SYSTEM CONTROLLER WITH DIGITAL KEYPAD WITH BATTERY BACKUP.

EQUIVALENT MANUFACTURER'S
1. EASY WATER
2. FLECK
3. ROBERT B HILL

WATER HEATER SCHEDULE

MARK	BASIS OF DESIGN MANUFACTURER	MODEL #	TYPE	GALLON CAPACITY	RECOVERY GPH @ 80F RISE	INPUT BTUH	OUTPUT BTUH	%AFUE	KW	VOLTAGE/ PHASE	ACCESSORIES
WH1	LOCHINVAR	SWA500N	LPG	110	700	500	475	95%	-	120/1	1,2,3,4,5

ACCESSORIES:
1. THERMAL EXPANSION TANK EQUIVALENT TO AMTROL MODEL ST-12.
2. DRAIN VALVE WITH THREADED HOSE CONNECTION.
3. ASME PRESSURE & TEMPERATURE RELIEF VALVE.
4. INCLUDE CONDENSATE NEUTRALIZATION KIT.
5. INCLUDE CONCENTRIC VENT TERMINATION KIT.

EQUIVALENT MANUFACTURER'S
1. BRADFORD-WHITE
2. LOCHINVAR
3. STATE

PLUMBING FIXTURE & EQUIPMENT SCHEDULE

MARK	DESCRIPTION	BASIS OF DESIGN MANUFACTURER	MODEL NUMBER	ACCESSORIES	PIPING CONNECTION SIZES COLD WATER	HOT WATER	WASTE	VENT	NOTES	EQUIVALENT MANUFACTURERS
BFP1	BACKFLOW PREVENTER	WATTS	957	STAINLESS STEEL HOUSING, TWO IN LINE INDEPENDENT CHECK VALVES, REPLACEABLE CHECK SEATS WITH AN INTERMEDIATE RELIEF VALVE, AND BALL VALVE TEST COCKS, NON-RISING RESILIENT SEATED GATE VALVES, AIR GAP DRAIN FITTING	2"	-	-	-	-	FEBCO, ZURN
DF1	BI-LEVEL ELECTRIC WATER COOLER WITH BOTTLE FILLER	ELKAY	EMABFTL8WSSK	ZURN Z1225-BL CARRIER, 1.25" TRAP, SUPPLY AND STOP VALVE, MATCHING ACCESSORY CANE APRON FOR ADA PROTECTION.	0.5"	-	2"	1.5"	1,2,3,4,7	HAWS, OASIS
FD1	LIGHT DUTY FLOOR DRAIN	ZURN	FD2210	NICKEL BRONZE GRATE, PROSET TRAPQUARD	-	-	SEE PLAN	SEE PLAN	1	JOSAM, SIOUX CHIEF, SMITH, WATTS
FFCO	FINISH FLOOR CLEANOUT	ZURN	ZN1400	NICKEL BRONZE TOP	-	-	SEE PLAN	-	1	JOSAM, SIOUX CHIEF, SMITH, WATTS
FGCO	FINISH GRADE CLEANOUT	ZURN	ZN1400-HD	HEAVY DUTY TOP	-	-	SEE PLAN	-	1	JOSAM, SIOUX CHIEF, SMITH, WATTS
FWCO	FINISH WALL CLEANOUT	ZURN	Z1446	STAINLESS STEEL COVER	-	-	SEE PLAN	-	1	JOSAM, SIOUX CHIEF, SMITH, WATTS
FPWH	FREEZEPROOF WALL HYDRANT	ZURN	Z1320	1/4 TURN, NON-FREEZE WALL HYDRANT W/INTEGRAL VACUUM BREAKER LOOSE KEY	0.75"	-	-	-	1	SMITH. WATTS, WOODFORD
HB1	HOSE BIBB	ZURN	Z1341XL-PC	PLOISHED CHROME WALL HOSE BIBB W/VACUUM BREAKER	0.5"	-	-	-	1	WATTS, WOODFORD, PRIER
IB1	ICE MAKER BOX	GUY GRAY	MIB1HAAB	QUARTER TURN VALVE, WATTS 7C DUAL CHECK BACKFLOW PREVENTER, HAMMER ARRESTER, FLEXIBLE SUPPLY	0.5"	-	-	-	-	LSP, OATEY
LV1	LAVATORY, INTERGRAL BOWL REFER TO ARCHITECTURAL DRAWINGS	-	-	AMERICAN STANDARD #7385.004 SINGLE CONTROL FAUCET WITH 0.5 GPM VADAL-RESISTANT AERATOR, WATTS USG-B MIXING VALVE (SET AT 120F), GRID STRAINER, 1.25" TAILPIECE AND TRAP, SUPPLIES AND STOP VALVES.	0.5"	0.5"	2"	1.5"	1,2,3,4,5	ZURN, DELTA
MB1	MOP BASIN	FIAT	MSB-2424	830-AA FAUCET WITH INTEGRAL MIXER, WATTS USG-B MIXING VALVE (SET AT 120F), 838-AA HOSE AND BRACKET, 889-CC MOP HANGER, MSG2424 WALL GUARD	0.5"	0.5"	3"	1.5"	1	STERN WILLIAMS, ZURN, PROFLO
SA	SHOCK ABSORBER	ZURN	Z1700	-	SEE PLAN	SEE PLAN	-	-	6	SIOUX CHIEF, SMITH, WATTS
SD1	SHOWER DRAIN	ZURN	ZS415-BZ1	SHOWER DRAIN WITH STAINLESS STEEL TOP	-	-	2"	1.5"	-	JOSAM, SIOUX CHIEF, SMITH, WATTS
SV1	SHOWER VALVE	SYMMONS	S-9601-P	SHOWER TRIM WITH TEMPTROL PRESSURE BALANCE SHOWER VALVE	0.5"	0.5"	-	-		AMERICAN STANDARD, DELTA
SV2	ADA SHOWER VALVE	SYMMONS	9605-PLR	ADA SHOWER TRIM WITH TEMPTROL PRESSURE BALANCE SHOWER VALVE WITH ADA 36" GRAB BAR AND HAND SHOWER, DIVERTOR VALVE	0.5"	0.5"	-	-		AMERICAN STANDARD, DELTA
WC1	FLOOR MOUNT FLUSH VALVE WATER CLOSET	ZURN	Z5655-BWL	Z5955SS-EL ELONGATED, STANDARD WHITE OPEN FRONT SEAT, SUPPLY & STOP VALVE, ZURN ZER6000-HET AQUA VANTAGE FLUSH VALVE	1.25"	-	4"	2"	6	TOTO, AMERICAN STANDARD
WC2	ADA FLOOR MOUNT FLUSH VALVE WATER CLOSET	ZURN	Z5665-BWL1	Z5955SS-EL ELONGATED, STANDARD WHITE OPEN FRONT SEAT, SUPPLY & STOP VALVE, ZURN ZER6000-HET AQUA VANTAGE FLUSH VALVE	1.25"	-	4"	2"	3,6	TOTO, AMERICAN STANDARD

NOTES:
1. ACCESSORIES SHALL BE SAME MANUFACTURER AS FIXTURE / EQUIPMENT UNLESS NOTED OTHERWISE.
2. REFER TO ARCHITECTURAL DRAWINGS FOR MOUNTING HEIGHT.
3. INSTALL ACCESSORIES AS RECOMMENDED BY MANUFACTURER FOR ADA COMPLIANCE.
4. ALL COLORS AND FINISHES SELECTED BY ARCHITECT.
5. TRUEBRO ADA LAV SHIELD ON SUPPLIES, WASTE, AND MIXING VALVES.
6. PROVIDE SHOCK ABSORBER FOR ALL INDIVIDUAL FIXTURES OR BATTERIES. SIZE UNITS SERVING FIXTURE BATTERIES PER MANUFACTURERS RECOMMENDATIONS.
7. PROVIDE RECTANGULAR STEEL TUBE CARRIER AT FRAMED WALLS, WALL HANGER AT CMU WALLS.
8. FRAME TO EXTEND CONTINUOUS UNDER SHOWER SEPARATING WALLS WITH GRATES SEPARATED BETWEEN SHOWER WALLS. REFER TO PLUMBING PLAN. COORDINATE EXACT DIMENSIONS WITH ARCHITECTURAL PLANS. REFER TO UNDERFLOOR PLUMBING PLAN FOR APPROXIMATE LOCATIONS OF DRAIN OUTLET IN FRAME.

PLUMBING PUMP SCHEDULE

MARK	SERVICE	BASIS OF DESIGN MANUFACTURER	SERIES	SIZE	INLET	DISCH.	GPM	HEAD (FT.)	NPSH	TYPE	WORKING CLASS	H.P. (W)	RPM	VOLTAGE/ PHASE	CONST.	FLUID TYPE	FLUID TEMP.	NOTES/ ACCESSORIES
HWP1	WH1	BELL & GOSSETT	NRF	22	0.75"	0.75"	2	6	--	IL	150	92W	2940	120/1	AB	WATER	100-140	1,2

GENERAL NOTES:
1. PROVIDE TIME CLOCK AND AQUASTAT KIT. INSTALL REMOTE TEMPERATURE SENSOR WHERE HOT WATER RETURN PIPING CONNECTS TO HOT WATER PIPING.
2. PROVIDE BALANCE, CHECK AND SERVICE VALVES AT ALL BRANCH PIPING FROM MAIN HOT WATER RECIRCULATION PIPE.

EQUIVALENT MANUFACTURER'S
1. GRUNDFOSS
2. TACO
3. WATTS

ABBREVIATIONS:
NPSH - NET POSITIVE SUCTION HEAD
DHW - DOMESTIC HOT WATER
AB - ALL BRONZE
AI - ALL IRON
AS - AQUASTAT KIT
IL - IN-LINE

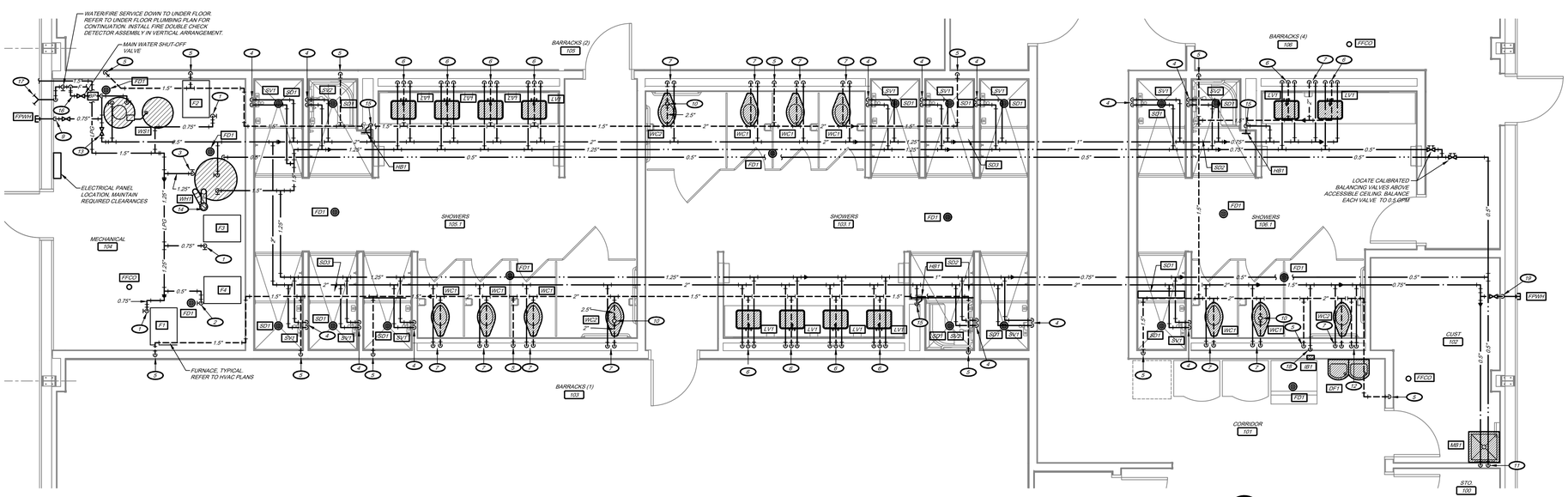

1 ENLARGED PLUMBING PLAN
1/8" = 1'-0"
NORTH

KEYNOTES:

1. 0.75" PROPANE DOWN TO FURNACE; PROVIDE SHUTOFF VALVE, DIRT LEG AND UNION.
2. 0.5" PROPANE DOWN TO FURNACE; PROVIDE SHUTOFF VALVE, DIRT LEG AND UNION.
3. 1.25" PROPANE DOWN TO WATER HEATER; PROVIDE SHUTOFF VALVE, DIRT LEG AND UNION.
4. 0.5" COLD AND HOT WATER DOWN IN SHOWER VALVE ENCLOSURE TO MIXING VALVE.
5. 1.5" VENT DOWN TO UNDER FLOOR.
6. 1.5" VENT, 0.5" COLD AND HOT WATER DOWN TO LAVATORY. 2" WASTE DOWN TO UNDER FLOOR. COORDINATE ROUTING OF WASTE PIPE THROUGH THICKENED SLAB UNDER WALL
7. 2" VENT AND 1.25" COLD WATER DOWN TO WATER CLOSET.
8. 1.5" VENT, 0.75" COLD AND HOT WATER DOWN IN WALL. 2" WASTE DOWN TO UNDER FLOOR. PROVIDE TEE IN WALL ON WATER PIPING WITH 0.5" COLD AND HOT WATER TO BACK TO BACK LAVATORIES. PROVIDE DOUBLE WYE FITTING IN WASTE PIPING FOR BACK TO BACK LAVATORIES.
9. 0.75" COLD WATER DOWN SECURED TO WALL, AT APPROXIMATELY 18" ABOVE FLOOR ROUTE THRU EXTERIOR WALL TO WALL HYDRANT.
10. 2.5" VENT UP, 3" VENT THRU ROOF.
11. 0.5" COLD AND HOT WATER DOWN TO MOP BASIN.
12. 1.5" VENT AND 0.5" COLD WATER DOWN TO DRINKING FOUNTAIN.
13. 2.5" NORMALLY CLOSED BALL VALVE FOR WATER SOFTENER BYPASS.
14. 4" PVC VENT AND 4" COMBUSTION AIR VENT FROM WATER HEATER. ROUTE UP TO 6" CONCENTRIC VENT TERMINATION KIT. REFER TO WATER HEATER MANUFACTURER'S INSTALLATION INSTRUCTIONS.
15. 0.75" COLD WATER DOWN AND HORIZONTALLY THRU WALL TO HOSE BIBB. LOCATE HOSE BIBB AT APPROXIMATELY 18" ABOVE FINISHED FLOOR
16. CONFIGURE WATER SERVICE PIPING TO MAINTAIN SPACE FOR INSTALLATION OF A POSSIBLE FUTURE WATER METER DOWNSTREAM OF THE WATER TAKEOFF FROM THE COMBINED WATER/FIRE SERVICE.
17. PROPOSED LOCATION FOR FIRE DEPARTMENT CONNECTION; VERIFY LOCATION WITH LOCAL FIRE DEPARTMENT AUTHORITIES. COORDINATE ROUTING OF PIPING WITH ALL OTHER TRADES.
18. **0.5" COLD WATER DOWN IN WALL TO ICE MAKER SUPPLY BOX.**
19. 0.75" COLD WATER DOWN IN WALL, AT APPROXIMATELY 18" ABOVE FLOOR ROUTE THRU EXTERIOR WALL TO WALL HYDRANT.

FIRE SPRINKLER GENERAL NOTES:

1. REFER TO SPECIFICATIONS DIVISION 21 FOR ADDITIONAL REQUIREMENTS.
2. PROVIDE DESIGN, MATERIALS, EQUIPMENT, FABRICATION, INSTALLATION, ETC. FOR A WET PIPE FIRE SPRINKLER SYSTEM THROUGHOUT THE ENTIRE BUILDING. ALL PORTIONS OF THE FIRE SPRINKLER SYSTEM SHALL BE THE RESPONSIBILITY OF THE FIRE SPRINKLER CONTRACTOR/ENGINEER. ANY PIPING SHOWN AT BUILDINGS OR ON SITE IS FOR REFERENCE ONLY.
3. THE FIRE SPRINKLER SYSTEM DESIGN AND INSTALLATION SHALL COMPLY WITH THE LATEST EDITION OF NFPA 13, STATE AND LOCAL CODES AS ADOPTED BY THE COUNTY OF NEWTON, MISSOURI. ALL FIRE SPRINKLER SYSTEM MATERIALS SHALL BE LL LISTED. FIRE SPRINKLER SYSTEM CONTRACTOR SHALL ENGINEER AND INSTALL THE FIRE SPRINKLER SYSTEM AS REQUIRED TO PROVIDE PROPER COVERAGE FOR THE AREA OF WORK.
4. SECURE ALL FEES, PERMITS, ETC. NECESSARY IN CONJUNCTION WITH THIS WORK. CONTRACTOR SHALL PAY ALL TAP AND EQUIPMENT FEES.
5. THE FIRE SPRINKLER CONTRACTOR SHALL BE RESPONSIBLE FOR OBTAINING HIS OWN FLOW READINGS FOR PURPOSES OF DESIGN.
6. SPRINKLER HEADS LOCATED IN GYPSUM AND LAY-IN CEILING AREAS SHALL BE CONCEALED RECESSED HEADS WITH COVERPLATES IN COLOR AS SELECTED BY ARCHITECT. HEADS IN AREAS WITH EXPOSED STRUCTURE SHALL BE BRASS, UPRIGHT HEADS.
7. CONTRACTOR SHALL SUBMIT AN ELECTRONIC SET OF SCALED LAYOUT DRAWINGS, CALCULATIONS, AND CUT SHEETS TO ARCHITECT/ENGINEER FOR COORDINATION AND APPROVAL. LAYOUT DRAWINGS SHALL INCLUDE SPRINKLER HEAD AND PIPING LOCATIONS, SERVICE DETAILS, ETC. SUBMIT REQUIRED MATERIALS TO AGENCY HAVING JURISDICTION FOR APPROVAL AND PERMIT.
8. FIRE SPRINKLER WORK SHALL BE PERFORMED BY A QUALIFIED CONTRACTOR WITH AT LEAST 3 YEARS OF INSTALLATION EXPERIENCE ON PROJECTS WITH FIRE PROTECTION WORK SIMILAR TO THAT REQUIRED FOR THE PROJECT. THE FIRE SPRINKLER SYSTEM SHALL BE ENGINEERED BY A REGISTERED PROFESSIONAL ENGINEER LICENSED IN THE STATE OF MISSOURI. AND THE DESIGN DRAWINGS AND CALCULATIONS SHALL BEAR HIS/HER MISSOURI SEAL AND SIGNATURE.
9. PROVIDE FIRE DEPARTMENT CONNECTIONS IN ACCORDANCE WITH LOCAL FIRE DEPARTMENT REQUIREMENTS.
10. CENTER SPRINKLER HEADS IN CEILING TILES AND BETWEEN LIGHTING FIXTURES AS APPLICABLE. HEAD PLACEMENT SHALL BE SUBJECT TO ARCHITECTURAL APPROVAL BASED ON AESTHETICS.

STATE OF MISSOURI
MICHAEL L. KEHOE,
GOVERNOR

STATE OF MISSOURI
RYAN S. JONES
NUMBER
PE-2004017193
PROFESSIONAL ENGINEER
06-12-25
RYAN S. JONES – ENGINEER
PE–2004017193

Missouri State Certificate of Authority #2005026903

CJD
Engineering | Energy | Innovation
2225 West Chesterfield Boulevard, Suite 200
Springfield, MO 65807
P: 417.877.1700 F: 417.324.7735
www.cjd-eng.com

OFFICE OF
ADMINISTRATION
DIVISION OF FACILITIES
MANAGEMENT, DESIGN
AND CONSTRUCTION

DEPT. OF PUBLIC SAFETY
MISSOURI NATIONAL GUA
DEPT. OF ADJUTANT GENE

CONSTRUCT NEW
44 SOLDIER BARRACKS
BUILDING 757

CAMP CROWDER
TRAINING SITE
890 RAY A CARVER DRIVE
NEOSHO, MISSOURI

PROJECT # T2234-01
SITE # 6260
ASSET # 8136260012

REVISION:
DATE:
REVISION:
DATE:
REVISION:
DATE:
ISSUE DATE: 06/12/2025

CAD DWG FILE: T2234-01-6260-8136230012
DRAWN BY: TKB
CHECKED BY: RSJ
DESIGNED BY: TKB

SHEET TITLE:
ENLARGED PLUMBING PLAN & SCHEDULES

SHEET NUMBER:
P-401

28 OF 32 SHEETS
JUNE 12, 2025

AIR DEVICE SCHEDULE

MARK	BASIS OF DESIGN MANUFACTURER	MODEL	DUCT CONNECTION SIZE	SERVICE	MODULE SIZE	FRAME	FINISH	DAMPER	MAX NC	DELTA P (STATIC)	NOTES
E1	KRUEGER	56690	6": 0-85 CFM 8": 90-165 CFM 10": 170-240 CFM 12": 245-350 CFM 14": 355-440 CFM	EXHAUST	20x20	SURFACE	WHITE	-	30	0.07"	1,3,4
E2	KRUEGER	56690	6": 0-85 CFM	EXHAUST	24x24	LAY-IN	WHITE	-	30	0.06"	1
S1	KRUEGER	PLQ	6": 0-100 CFM 8": 105-215 CFM 10": 220-360 CFM 12": 365-550 CFM	SUPPLY	24x24	LAY-IN	WHITE	-	30	0.08"	1,2
S2	KRUEGER	5PLQ	6": 0-100 CFM 8": 105-215 CFM 10": 220-360 CFM 12": 365-550 CFM	SUPPLY	24x24	SURFACE	WHITE	-	30	0.08"	1,3,4
R1	KRUEGER	6490	12x12: 0-400 CFM 18x18: 405-950 CFM 22x22: 955-1400 CFM	RETURN	24x24	LAY-IN	WHITE	-	30	0.06"	1
R2	KRUEGER	S80H	12x8: 125-350 CFM 18x10: 355-680 CFM 22x16: 1100-1450 CFM 26x18: 1455-2000 CFM	RETURN	-	SURFACE	WHITE	OBD	30	0.055"	1
T1	KRUEGER	6490	12x12: 0-450 CFM	TRANSFER	20x20	SURFACE	WHITE	-	20	0.04"	1

NOTES:
1. GRILLE/DIFFUSER NECK SHALL BE SAME SIZE AS BRANCH DUCTWORK UNLESS NOTED OTHERWISE ON PLAN.
2. DIFFUSER DISCHARGE AIR PATTERN SHALL BE 4-WAY UNLESS NOTED BY DIRECTION ON PLANS.
3. INCLUDE YOUNG REGULATOR MODEL 270-301 OR EQUIVALENT REMOTE CABLE CONTROL FOR DAMPER WITH CUP AND CEILING COVER PLATE AT INACCESSIBLE CEILINGS.
4. ALL ALUMINUM CONSTRUCTION

GAS FURNACE/COIL/CONDENSING UNIT SCHEDULE

FURNACE

MARK	BASIS OF DESIGN MFGR	MODEL #	CFM	OA CFM	DELTA P (STATIC)	INPUT (MBH)	OUTPUT (MBH)	VOLTAGE/ PHASE	MCA	MOCP	NOTES
F1	TRANE	S9X2C100	2000	450	0.5"	100	96	120/1	13.3	15	1,2,3,4
F2	TRANE	S9X2C100	1600	430	0.5"	100	96	120/1	13.3	15	1,2,3,4
F3	TRANE	S9X1B060	1000	290	0.5"	60	58.2	120/1	8.8	15	1,2,3,4
F4	TRANE	S9X1B060	1000	320	0.5"	60	58.2	120/1	8.8	15	1,2,3,4

FURNACE NOTES:
1. EXTERNAL STATIC PRESSURE INCLUDES WET COIL, EXCLUDES FILTER LOSS.
2. PROVIDE ACCESSIBLE FILTER RACK AND 2" FILTER EQUAL TO FARR 30/30 WITH MERV 7 MINIMUM RATING.
3. PROVIDE DIRECT VENT, CONCENTRIC ROOF TERMINATION KIT.

COIL / CONDENSING UNIT

MARK	BASIS OF DESIGN MANUFACTURER	EVAP. COIL MODEL #	COND. UNIT MODEL #	ENTERING AIR DB/WB	SENSIBLE MBH	TOTAL MBH	VOLTAGE/ PHASE	SEER	MCA	MOCP	NOTES
CU1	TRANE	4TXC	4TTR6061	78.6/64.0	44.9	54.6	230/1	16	41.0	60	1,2
CU2	TRANE	4TXC	4TTR6048	79.0/64.1	38.8	45.7	230/1	16	28.0	45	1,2
CU3	TRANE	4TXC	4TTR6030	79.2/64.5	25.2	28.9	230/1	16	17.0	25	1,2
CU4	TRANE	4TXC	4TTR6030	80.0/65.3	25.2	28.9	230/1	16	17.0	25	1,2

COIL / CONDENSING UNIT NOTES:
1. PROVIDE REFRIGERANT LINE SET(S) SIZED PER MANUFACTURER'S RECOMMENDATIONS.
2. PROVIDE ALL REFRIGERATION SYSTEM ACCESSORIES REQUIRED BY MANUFACTURER FOR GIVEN LINE SET ROUTING.

LOUVER SCHEDULE

MARK	BASIS OF DESIGN MANUFACTURER	MODEL #	SERVICE	CFM	DELTA P (STATIC)	WIDTH X HEIGHT (IN)	DEPTH (IN)	FREE AREA MIN (SQ.FT.)	VELOCITY (FPM)	NOTES
L1	POTTORFF	EFD-437	INTAKE	1,490	0.04"	36" x 24"	4"	2.9	510	1,2,3,4
L2	POTTORFF	EFD-437	EXHAUST	1,295	0.04"	24" x 24"	4"	1.9	693	1,2,3,4

NOTES:
1. BIRD SCREEN
2. ALUMINUM EXTRUDED CONSTRUCTION.
3. COORDINATE FRAME TYPE AND INSTALLATION WITH PRE-ENGINEERED METAL BUILDING MANUFACTURER'S INSTALLATION INSTRUCTIONS.
4. DARK BRONZE FINISH, VERIFY EXACT FINISH WITH ARCHITECT PRIOR TO ORDERING.

FAN SCHEDULE

MARK	BASIS OF DESIGN MANUFACTURER	MODEL #	CFM	E.S.P. (IN. W.G.)	MOUNTING	FINISH	DAMPER	VOLTAGE/ PHASE	MOTOR HP/WATTS	NOTES/ ACCESSORIES
EF1	COOK	120SQN17D (VF)	1,295	0.75"	INLINE	STD	M.D.	120/1	1/2 HP	1,2,3,4

NOTES/ACCESSORIES:
1. FACTORY DISCONNECTING MEANS.
2. INCLUDE FAN SPEED CONTROLLER.
3. INCLUDE SPRING VIBRATION ISOLATOR HANGERS TO COMPLY WITH THE REQUIREMENTS OF SEISMIC CATEGORY D.
4. INCLUDE LINE VOLTAGE MOTORIZED DAMPER. DAMPER SET TO OPEN ON FAN OPERATION. CLOSE WHEN FAN OFF.

HVAC TEMPERATURE CONTROLS NOTES:

THE CAMPUS HAS AN EXISTING "PELICAN" WIRELESS HVAC CONTROLS SYSTEM. THIS BUILDING SHALL BE INTERCONNECTED TO THE EXISTING SYSTEM. PROVIDE ALL REQUIRED DEVICES AND SETUP FOR THE HVAC SYSTEM TO FUNCTION AND COMMUNICATE WITH THE PELICAN WIRELESS SYSTEM CONTROL SYSTEM, INCLUDING THE FOLLOWING ITEMS:

1. *"PELICAN" #CWHA00-LTE INTEGRATED CELLULAR-ENABLED WIRELESS EXTENDED RANGE GATEWAY. REFER TO PLAN FOR LOCATION.*
2. *THE CONTRACTOR'S BID SHALL INCLUDE FIVE YEARS OF THE "PELICAN ANYWHERE CELLULAR NETWORK SERVICE" FOR THE SYSTEM.*
3. *FOR THE HVAC SPLIT SYSTEM, "PELICAN" #TS200 INTERNET-ENABLED THERMOSTAT. THERMOSTAT SHALL INCLUDE 7-DAY PROGRAMMING, WIRELESS MESH NETWORK COMMUNICATION AND REPEATING, TRENDING CAPABILITIES.*
4. *INTERCONNECT THE SYSTEM OUTSIDE AIR DAMPER TO OPEN DURING OCCUPIED HOURS.*
5. *INSTALL THERMOSTATS AT 54" ABOVE FINISHED FLOOR. WHEN LOCATED ABOVE LIGHT SWITCH, MAINTAIN ALIGNMENT DIRECTLY ABOVE THE LIGHT SWITCH.*

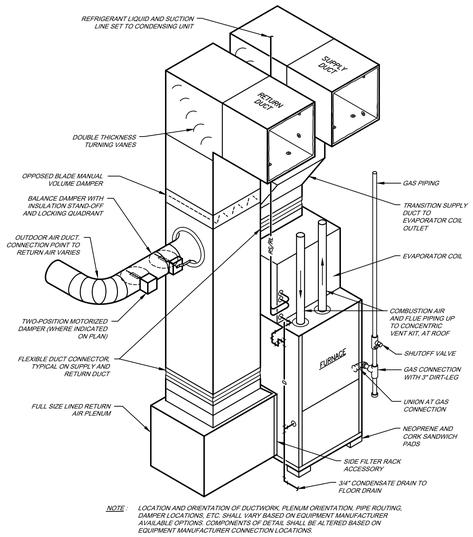

NOTE: LOCATION AND ORIENTATION OF DUCTWORK, PLENUM ORIENTATION, PIPE ROUTING, DAMPER LOCATIONS, ETC. SHALL VARY BASED ON EQUIPMENT MANUFACTURER AVAILABLE OPTIONS. COMPONENTS OF DETAIL SHALL BE ALTERED BASED ON EQUIPMENT MANUFACTURER CONNECTION LOCATIONS.

7 GAS FURNACE DETAIL
NO SCALE

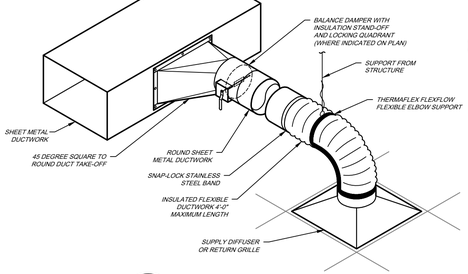

6 DIFFUSER DETAIL
NO SCALE

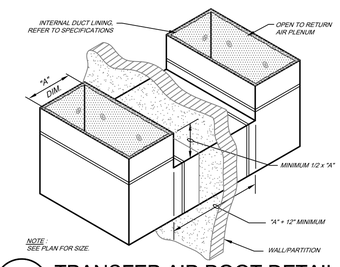

5 TRANSFER AIR BOOT DETAIL
NO SCALE

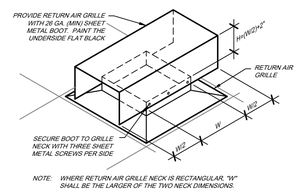

NOTE: WHERE RETURN AIR GRILLE NECK IS RECTANGULAR, "W" SHALL BE THE LARGER OF THE TWO NECK DIMENSIONS.

4 RETURN GRILLE DETAIL
NO SCALE

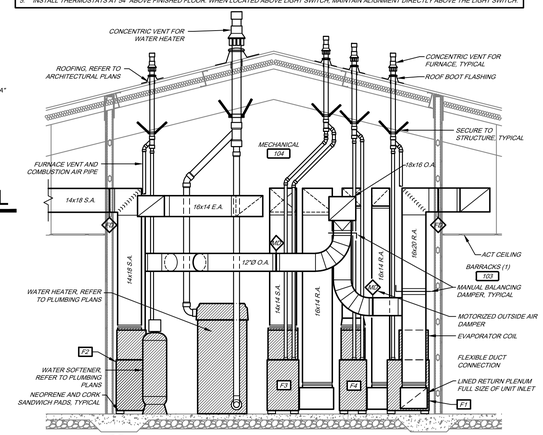

3 SECTION - LOOKING WEST
1/4" = 1'-0"

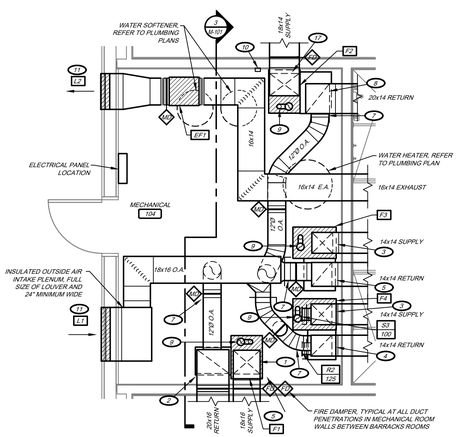

2 ENLARGED MECHANICAL ROOM HVAC PLAN
1/4" = 1'-0"
NORTH

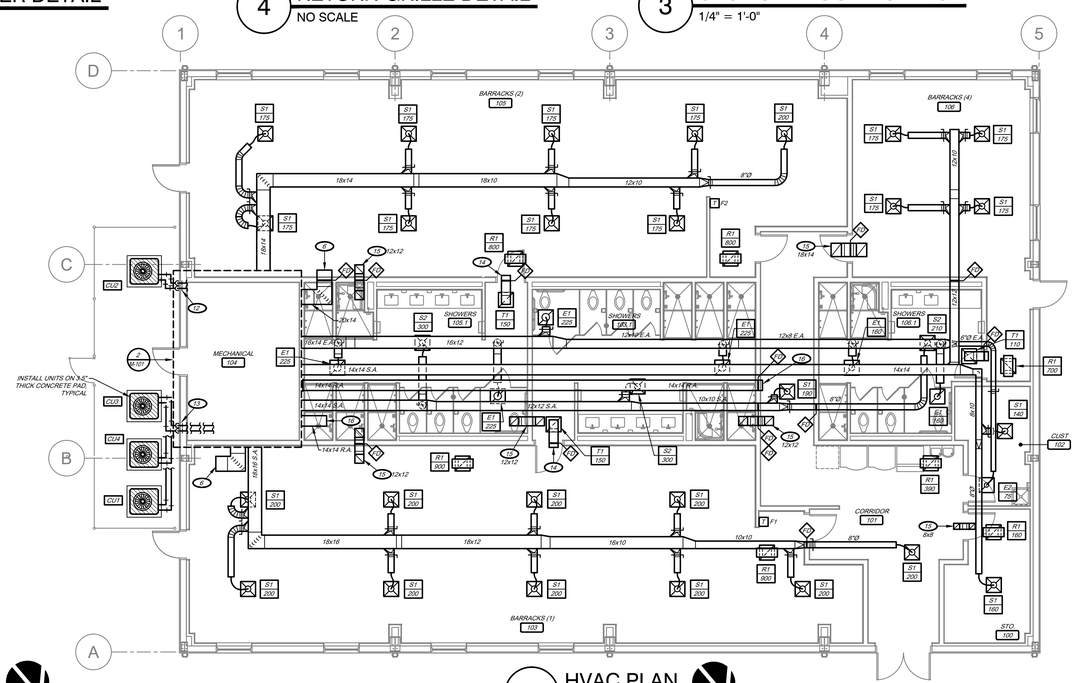

1 HVAC PLAN
1/8" = 1'-0"
NORTH

KEYNOTES:

1. 16x16 SUPPLY DUCT DOWN AND TRANSITION TO FURNACE SUPPLY AIR CONNECTION.
2. 20x16 RETURN DUCT DOWN TO RETURN PLENUM OF FURNACE, REFER TO GAS FURNACE DETAIL.
3. 14x14 SUPPLY DUCT DOWN AND TRANSITION TO FURNACE SUPPLY AIR CONNECTION.
4. 14x14 RETURN DUCT DOWN TO RETURN PLENUM OF FURNACE, REFER TO GAS FURNACE DETAIL.
5. 16x14 RETURN DUCT DOWN TO RETURN PLENUM OF FURNACE, REFER TO GAS FURNACE DETAIL.
6. 20x16 RETURN DUCT OPEN ENDED TO CEILING SPACE.
7. 12"Ø OUTSIDE AIR DUCT WITH 2-POSITION MOTORIZED DAMPER AND MANUAL BALANCING DAMPER. ROUTE TO RETURN DUCT ON FURNACE. BALANCE TO OUTSIDE AIR CFM AS NOTED IN FURNACE SCHEDULE.
8. 20x14 RETURN DUCT DOWN TO RETURN PLENUM OF FURNACE, REFER TO GAS FURNACE DETAIL.
9. 2" PVC COMBUSTION AIR AND VENT FROM FURNACE. ROUTE UP TO CONCENTRIC VENT THRU ROOF. AT ROOF PENETRATION PROVIDE A FEMA P-361/ICC-500 TESTED STEEL PIPE VENT THRU ROOF ASSEMBLY AND ROUTE CONCENTRIC VENT THRU THE ASSEMBLY. FEMA PIPE ASSEMBLY SHALL BE "ROOF PENETRATION HOUSINGS" MODEL CVTR-2006-PC. 6" INSIDE DIAMETER FOR PRE-CAST INSTALLATION. COORDINATE HEIGHT OF FEMA PIPE ASSEMBLY TO ACCOMMODATE THE CONCENTRIC VENT KIT. ASSEMBLY SHALL BE SECURELY INSTALLED INTO PRECAST ROOF STRUCTURE. COORDINATE WITH PRECAST CONTRACTOR.
10. HVAC CONTROL SYSTEM WIRELESS EXTENDED RANGE GATEWAY. SECURE TO WALL APPROXIMATELY 48" ABOVE FLOOR. REFER TO ELECTRICAL DRAWINGS FOR RECEPTACLE LOCATION.
11. REFER TO ARCHITECTURAL DRAWINGS FOR ELEVATION OF LOUVER IN WALL.
12. ROUTE REFRIGERANT LINES TO ASSOCIATED EVAPORATOR COIL. SEAL WALL PENETRATION WEATHERTIGHT.
13. ROUTE REFRIGERANT LINES TO ASSOCIATED EVAPORATOR COIL. SEAL WALL PENETRATION WEATHERTIGHT. COORDINATE ROUTING OF REFRIGERANT LINES WITH PHONE BOARD ON INSIDE SURFACE OF EXTERIOR WALL. REFER TO ELECTRICAL PLANS.
14. 12x8 INTERNALLY LINED TRANSFER DUCT OPEN ENDED TO CEILING SPACE.
15. INTERNALLY LINED DOUBLE ELBOW TRANSFER DUCT ABOVE CEILING. REFER TO PLAN FOR SIZE.
16. 14x14 RETURN DUCT OPEN ENDED TO CEILING SPACE.
17. 18x14 SUPPLY DUCT DOWN AND TRANSITION TO FURNACE SUPPLY AIR CONNECTION.

GENERAL HVAC NOTES:

1. THE PLANS ARE DIAGRAMMATIC AND SHALL NOT BE SCALED. REFER TO ARCHITECTURAL DRAWINGS FOR DIMENSIONS.
2. EQUIPMENT AND DUCTWORK LAYOUTS ARE DIAGRAMMATIC. FIELD COORDINATE EXACT LOCATIONS AND ROUTINGS WITH STRUCTURE, PIPING, CONDUITS, LIGHT FIXTURES, ETC. FINAL RESULT SHALL BE EQUIVALENT TO THAT INDICATED ON DRAWINGS.
3. COOPERATE CLOSELY WITH ALL OTHER TRADES TO EXPEDITE CONSTRUCTION AND AVOID INTERFERENCES AND CONFLICTS. BEFORE ANY PIPING, DUCTWORK, CONDUIT, ETC. IS INSTALLED, IT SHALL BE COORDINATED CAREFULLY BETWEEN ALL TRADES.
4. CONTRACTOR SHALL FIELD VERIFY EXTENT OF EXISTING CONSTRUCTION.
5. CONTRACTOR SHALL COORDINATE WITH ARCHITECT AND STRUCTURAL ENGINEER FOR SIZE AND LOCATION OF SLEEVES THROUGH EXISTING STRUCTURAL WALLS.
6. MAINTAIN ALL CLEARANCES REQUIRED FOR EQUIPMENT. DO NOT ROUTE PIPING, DUCTWORK, ETC. ABOVE ELECTRICAL PANELS.
7. PROVIDE UNISTRUTS AND ACCESSORIES AS REQUIRED FOR SUPPORT OF DUCTWORK, EQUIPMENT, ETC.
8. SEAL AROUND ALL RATED WALL PENETRATIONS WITH FIRE STOPPING/CAULKING PER SPECIFICATIONS.
9. ALL EXPOSED DUCTWORK, PIPING, SUPPORTS, ETC. SHALL BE PRIMED AND PAINTED PER THE SPECIFICATIONS.
10. BRANCH DUCTS SHALL BE THE SAME SIZE AS DIFFUSER NECK UNLESS NOTED OTHERWISE.
11. COORDINATE CEILING DIFFUSER AND GRILLE LOCATIONS WITH ARCHITECTURAL REFLECTED CEILING PLANS.
12. REFER TO EQUIPMENT SCHEDULES FOR OUTSIDE AIR QUANTITIES TO INDIVIDUAL HVAC UNITS.
10. ALL THERMOSTATS, SENSORS, DAMPER CONTROLS, ASSOCIATED ACCESSORIES, AND FINAL WIRING CONNECTIONS SHALL BE PROVIDED BY HVAC CONTRACTOR. ROUGH-IN AND WIRE INSTALLATION SHALL BE PROVIDED BY ELECTRICAL CONTRACTOR.
11. REFER TO SPECIFICATIONS FOR ADDITIONAL REQUIREMENTS.

HVAC DUCTWORK:

- FLEXIBLE DUCT
- 12x12 — RECTANGULAR DUCT DIMENSIONS (WIDTH x HEIGHT)
- VOLUME DAMPER WITH LOCKING QUADRANT
- BRANCH DUCT WITH 45° BOOT FITTING
- BRANCH DUCT WITH BELLMOUTH SPIN-IN FITTING WITH MANUAL VOLUME DAMPER
- BRANCH DUCT WITH HIGH EFFICIENCY RECTANGULAR TO ROUND TAKE-OFF WITH MANUAL VOLUME DAMPER
- ELBOW WITH DOUBLE WALL TURNING VANES
- RETURN, EXHAUST OR FRESH AIR DUCT UP
- RETURN, EXHAUST OR FRESH AIR DUCT DOWN
- SUPPLY AIR DUCT UP
- SUPPLY AIR DUCT DOWN
- EQUIPMENT WITH FLEXIBLE DUCT CONNECTION

HVAC EQUIPMENT:

- SUPPLY DIFFUSER
- RETURN, EXHAUST GRILLE
- LINEAR DIFFUSER
- S1 150 — DIFFUSER/GRILLE TYPE, AIRFLOW
- FD — FIRE DAMPER
- SD — SMOKE DAMPER
- FSD — FIRE/SMOKE DAMPER
- MD — MOTORIZED DAMPER

HVAC CONTROLS:

- T RTU — THERMOSTAT AND EQUIPMENT SERVED
- S CO2 — SPACE CO2 SENSOR
- S H — HUMIDITY SENSOR

NOTE: INSTALL THERMOSTATS AND SENSORS AT 48" ABOVE FINISH FLOOR UNLESS NOTED OTHERWISE

NOTATION:

- E.A. — EXHAUST AIR
- O.A. — OUTSIDE AIR
- R.A. — RETURN AIR
- S.A. — SUPPLY AIR

STATE OF MISSOURI
MICHAEL L. KEHOE,
GOVERNOR

STATE OF MISSOURI — RYAN S. JONES — PE-2004017193 — PROFESSIONAL ENGINEER

06-12-25

RYAN S. JONES – ENGINEER
PE–2004017193

Missouri State Certificate of Authority #2005026903

CJD
Engineering | Energy | Innovation
2225 West Chesterfield Boulevard, Suite 200
Springfield, MO 65807
P: 417.877.1700 F: 417.324.7735
www.cjd-eng.com

OFFICE OF ADMINISTRATION
DIVISION OF FACILITIES MANAGEMENT, DESIGN AND CONSTRUCTION

DEPT. OF PUBLIC SAFETY
MISSOURI NATIONAL GUA
DEPT. OF ADJUTANT GENE

CONSTRUCT NEW
44 SOLDIER BARRACKS
BUILDING 757

CAMP CROWDER
TRAINING SITE
890 RAY A CARVER DRIVE
NEOSHO, MISSOURI

PROJECT # T2234-01
SITE # 6260
ASSET # 8136260012

REVISION:
DATE:
REVISION:
DATE:
REVISION:
DATE:
ISSUE DATE: 06/12/2025

CAD DWG FILE: T2234-01-6260-8136230012
DRAWN BY: TKB
CHECKED BY: RSJ
DESIGNED BY: TKB

SHEET TITLE:
HVAC PLAN, SCHEDULES & DETAILS

SHEET NUMBER:
M-101

32 OF 32 SHEETS
JUNE 12, 2025

PHOTOCELL SCHEDULE

MARK	LOAD			SWITCH						
	EQUIPMENT SERVED	WATTS	VOLTAGE	BASIS OF DESIGN		AMP	POLE	ENCLOSURE	APPROVED MANUFACTURERS	ACCESS.
				MFR	MODEL #					
PC1	LIGHTING	-	-	INTERMATIC	K4121C	15	1	NEMA 3R	TORK, KICHLER	1,2

ACCESSORIES:
1. SWIVEL MOUNTING
2. LIGHT LEVEL SLIDE ADJUSTMENT

OCCUPANCY SENSOR SCHEDULE

MARK	LOAD		SENSOR							
	EQUIPMENT SERVED	VOLTAGE	BASIS OF DESIGN		VOLTAGE	TYPE	TIME DELAY	MOUNTING	INTERLOCK	ACCESS.
			MANUFACTURER	MODEL #						
OS1	RESTROOM LIGHTING	120	HUBBELL	OMNIDT500	24V	IR/US	AUTO	CEILING	-	1,2,4
OS2	CORRIDOR LIGHTING	120	HUBBELL	OMNIDT2000	24V	IR/US	AUTO	CEILING	-	1,2,4

NOTES/ACCESSORIES:
1. PROVIDE CONTROL UNIT(S) AS REQUIRED.
2. WHERE SWITCHING IS SHOWN, WIRE OCCUPANCY SENSOR CONTROL IN SERIES WITH LOCAL LIGHT SWITCHING.
3. WALL SWITCH SHALL BE CAPABLE OF MANUAL ON-OFF CONTROL
4. WIRE IN SERIES WITH MULTIPLE SENSORS WHERE REQUIRED.

GENERAL NOTES (APPLIES TO ALL SENSORS):
1. EACH SENSOR TYPE MAY BE SHOWN IN MULTIPLE LOCATIONS ON ELECTRICAL PLANS
2. EQUIPMENT SUBMITTAL: PRIOR TO APPROVAL, WITH OCCUPANCY SENSOR SPECIFICATION INFORMATION, CONTRACTOR SHALL SUBMIT PLAN (PROVIDED BY MANUFACTURER'S REPRESENTATIVE) WITH OCCUPANCY SENSOR LOCATIONS, OCCUPANCY SENSOR TYPE, MOUNTING HEIGHT AND SENSOR COVERAGE FOR EACH SPACE.

ABBREVIATIONS:
PIR - PASSIVE INFRARED
US - ULTRASONIC
IR/US -DUAL TECHNOLOGY

APPROVED MANUFACTURERS:
GREENGATE/NOVITAS
WATTSTOPPER
LEVITON

LIGHTING FIXTURE SCHEDULE

MARK	BASIS OF DESIGN MANUFACTURER	MODEL #	FINISH	MOUNTING	LAMPS			FIXTURE WATTS	VOLTAGE	APPROVED MANUFACTURERS	NOTES
					TYPE	CODE	QTY.				
C1	WILLIAMS	6DR-TL-L10/840-DIM-UNV-SM-OF-CS-WET/CC	WHITE	RECESSED	LED	WITH FIXTURE	-	9	120	LITHONIA, COOPER IND.	1,2,3,7
PL1	LUMARK	PRV-C40-D-UNV-T4-BZ	ARCH	POLE	LED	WITH FIXTURE	-	145	120	LITHONIA, HUBBELL	1,2,4,9,10
S1	WILLIAMS	75R-8-L60/840-DRV-120	WHITE	SUSPENDED	LED	WITH FIXTURE	-	36	120	LITHONIA, COOPER IND.	7
T1	WILLIAMS	LT24-L40/840-AF-DRV-120	WHITE	RECESSED	LED	WITH FIXTURE	-	32	120	LITHONIA, COOPER IND.	7,8
T1E	WILLIAMS	LT24-L40/840-AF-EM/12W-DRV-120	WHITE	RECESSED	LED	WITH FIXTURE	-	32	120	LITHONIA, COOPER IND.	5,7,8
W1	WILLIAMS	WPCS-L44/840-BZ-EM/6W-DIM-UNV	ARCH	WALL	LED	WITH FIXTURE	-	42	120	LITHONIA, COOPER IND.	1,2,9
X1	WILLIAMS	EXIT-R-EM-WHT-D	WHITE	UNIVERSAL	LED	WITH FIXTURE	-	5	120	LITHONIA, COOPER IND.	6,7

NOTES:
1. FIXTURE SHALL BE LISTED FOR OUTDOOR USE AND SHALL BE UL LISTED FOR DAMP AND WET LOCATIONS AS REQUIRED.
2. FIXTURE LAMP AND BALLAST SHALL BE CAPABLE OF OPERATING DOWN TO 0 DEGREES F. AND UP TO 110 DEGREES F.
3. COLOR SELECTION SHALL BE VERIFIED WITH ARCHITECT/OWNER PRIOR TO ORDERING.
4. PROVIDE 25' STRAIGHT STEEL POLE AND ACCESSORIES AS REQUIRED FOR COMPLETE INSTALLATION.
5. PROVIDE FIXTURE WITH EMERGENCY BATTERY BACK-UP FOR MINIMUM 120-MINUTES OPERATION.
6. REFER TO PLANS AND COORDINATE WITH OWNER/ARCHITECT FOR MOUNTING TYPE, FACE ORIENTATION, AND CHEVRON DIRECTION AS APPLICABLE.
7. PROVIDE CLIPS OR MEANS OF SUPPORT AS REQUIRED TO COMPLY WITH THE REQUIREMENTS OF SEISMIC CATEGORY D.
8. PROVIDE SURFACE MOUNT KIT LT-24-SMK-W WHERE INSTALLED AT HARD LID CEILING.
9. VERIFY FINISH WITH ARCHITECT.
10. BASE BID SCOPE DOES NOT INCLUDE THIS FIXTURE. SHALL BE INCLUDED WITHIN THE SCOPE OF ALTERNATE NO. 1.

GENERAL NOTES (APPLY TO ALL LIGHT FIXTURES):
1. SUBMIT ALL REQUESTS FOR EQUIVALENCY TO ARCHITECT/ENGINEER A MINIMUM OF (10) WORKING DAYS PRIOR TO BID DATE. REQUESTS ARE SUBJECT TO APPROVAL BY ARCHITECT/ENGINEER BASED ON PERFORMANCE AND AESTHETICS.
2. PROVIDE INSULATION BARRIER, WHERE NON IC-RATED LIGHT FIXTURES ARE INSTALLED WHERE THEY MAY BE IN DIRECT CONTACT WITH INSULATION. INSULATION BARRIER SHALL BE EQUAL TO PRODUCTS BY 'E.Z. BARRIER'

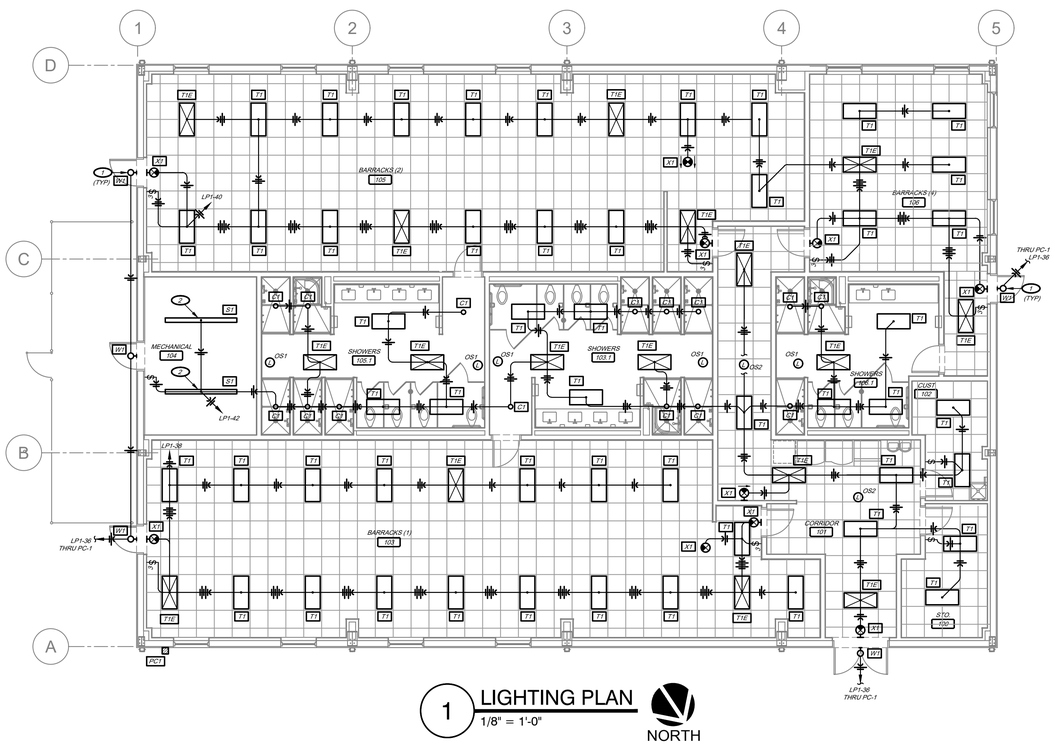

1 LIGHTING PLAN
1/8" = 1'-0"
NORTH

KEYNOTES:

1. WALL PACK SHALL BE INSTALLED AT APPROXIMATELY 9'-0".
2. FIELD COORDINATE EXACT LOCATION AND MOUNTING OF LIGHTING FIXTURE TO AVOID CONFLICT WITH DUCTWORK IN MECHANICAL ROOM.

LIGHTING SYMBOLS:

- EXIT LIGHT; WALL MOUNTED / CEILING MOUNTED
- EMERGENCY LIGHT
- EXIT/EMERGENCY LIGHT
- FLUORESCENT OR LED LIGHT FIXTURE
- RECESSED CAN LIGHT FIXTURE
- EMERGENCY LIGHT FIXTURE
- LIGHT SWITCH
- 3 3-WAY LIGHT SWITCH
- OS CEILING MOUNTED OCCUPANCY SENSOR
- PANEL LIGHTING & POWER PANELBOARD
- CONDUIT CONCEALED IN CEILING OR WALL
- CONDUIT BELOW GRADE
- HOME RUN: TICK MARKS INDICATE NUMBER OF WIRES, ARROWS INDICATE NUMBER OF CIRCUITS
- GROUND WIRE
- 1 FEEDER PER SCHEDULE

STATE OF MISSOURI
MICHAEL L. KEHOE,
GOVERNOR

STATE OF MISSOURI
RYAN S. JONES
NUMBER
PE-2004017193
PROFESSIONAL ENGINEER
06-12-25

RYAN S. JONES – ENGINEER
PE–2004017193

Missouri State Certificate of Authority #2005026903

CJD
Engineering | Energy | Innovation
2225 West Chesterfield Boulevard, Suite 200
Springfield, MO 65807
P: 417.877.1700 F: 417.324.7735
www.cjd-eng.com

OFFICE OF ADMINISTRATION
DIVISION OF FACILITIES MANAGEMENT, DESIGN AND CONSTRUCTION

DEPT. OF PUBLIC SAFETY
MISSOURI NATIONAL GUA
DEPT. OF ADJUTANT GENE

CONSTRUCT NEW
44 SOLDIER BARRACKS
BUILDING 757

CAMP CROWDER
TRAINING SITE
890 RAY A CARVER DRIVE
NEOSHO, MISSOURI

PROJECT # T2234-01
SITE # 6260
ASSET # 8136260012

REVISION:
DATE:
REVISION:
DATE:
REVISION:
DATE:
ISSUE DATE: 06/12/2025

CAD DWG FILE: T2234-01-6260-8136230012
DRAWN BY: TJG
CHECKED BY: RSJ
DESIGNED BY: TJG

SHEET TITLE:
LIGHTING PLAN

SHEET NUMBER:
E-101

30 OF 32 SHEETS
JUNE 12, 2025

DISCONNECT SWITCH SCHEDULE

MARK	LOAD		SWITCH			OVERCURRENT PROTECTION					NEMA	NOTES &
	EQUIPMENT SERVED	VOLTAGE	DUTY	AMP	POLE	TYPE	MFR	MODEL	AMP	KAIC	ENCLOSURE	ACCESS.
DS1	CONDENSING UNIT - CU1	240	GD	60	1	NF	--	--	--	--	3R	1
DS2	CONDENSING UNIT - CU2	240	GD	60	1	NF	--	--	--	--	3R	1
DS3	CONDENSING UNIT - CU3	240	GD	30	1	NF	--	--	--	--	3R	1
DS4	CONDENSING UNIT - CU4	240	GD	30	1	NF	--	--	--	--	3R	1

ACCESSORIES:
1. GROUND LUG KIT
2. SOLID NEUTRAL
3. SERVICE ENTRANCE RATING
4. DISCONNECT SHALL BE LOCKABLE IN THE OPEN POSITION

ABBREVIATIONS:
GB - ENCLOSED CIRCUIT BREAKER
GD - GENERAL DUTY
HD - HEAVY DUTY
NF - NON-FUSIBLE

APPROVED MANUFACTURERS:
EATON, GE, SIEMENS, SQUARE D

PANELBOARD SCHEDULE — LP1

VOLTAGE: 120/240 | POLES: 54 | MOUNTING: SURFACE | ENCLOSURE: NEMA 1
PHASE / WIRE: 1 /3 | KAIC AMPS (RMS): 22 | LOCATION: MECH. 104 | BASIS OF DESIGN: SQUARE D
AMPS: 200 | MAIN BREAKER / MLO: MLO | FED FROM: METER | MODEL: NQ

CIRC. NO.	EQUIPMENT SERVED	C/B AMPS	C/B POLES	C/B ACC.	LOAD (VA)	PHASE LOADS (VA) A	PHASE LOADS (VA) B	LOAD (VA)	C/B ACC.	C/B POLES	C/B AMPS	EQUIPMENT SERVED	CIRC. NO.
1	BARRACKS RECEPTACLES	20	1	-	1440	2880		1440	-	1	20	BARRACKS RECEPTACLES	2
3	BARRACKS RECEPTACLES	20	1	-	1440		2880	1440	-	1	20	BARRACKS RECEPTACLES	4
5	BARRACKS RECEPTACLES	20	1	-	1440	2880		1440	-	1	20	BARRACKS RECEPTACLES	6
7	BARRACKS RECEPTACLES	20	1	-	1440		2880	1440	-	1	20	BARRACKS RECEPTACLES	8
9	BARRACKS RECEPTACLES	20	1	-	840	2640		1800	-	1	20	BARRACKS RECEPTACLES	10
11	BARRACKS RECEPTACLES	20	1	-	1260		2700	1440	-	1	20	BARRACKS RECEPTACLES	12
13	BATHROOM RECEPTACLES	20	1	-	540	1980		1440	-	1	20	BARRACKS RECEPTACLES	14
15	CORRIDOR/JANITOR RECEPTACLES	20	1	-	720		2160	1440	-	1	20	BARRACKS RECEPTACLES	16
17	BATHROOM RECEPTACLES	20	1	-	1080	2520		1440	-	1	20	BARRACKS RECEPTACLES	18
19	DRINKING FOUNTAIN RECEPTACLE	20	1	GFCI	500		1940	1440	-	1	20	BARRACKS RECEPTACLES	20
21	MECHANICAL RECEPTACLES	20	1	-	360	1540		1180	-	1	20	FAN EF1	22
23	VENDING MACHINE RECEPTACLE	20	1	-	500		1500	1000	-	1	20	ICE MACHINE	24
25	VENDING MACHINE RECEPTACLE	20	1	-	500	1832		1332	-	1	15	FURNACE F1	26
27	CONDENSING UNIT (CU1)	60	2	HACR	3852		5184	1332	-	1	15	FURNACE F2	28
29	"				3852	5184		1332	-	1	15	FURNACE F3	30
31	CONDENSING UNIT (CU2)	45	2	HACR	2544		3876	1332	-	1	15	FURNACE F4	32
33	"				2544	2644		100	-	1	20	WATER HEATER / PUMP	34
35	CONDENSING UNIT (CU3)	30	2	HACR	2160		2750	590	-	1	20	EXTERIOR LIGHTING	36
37	"				2160	2770		610	-	1	20	INTERIOR LIGHTING	38
39	CONDENSING UNIT (CU4)	30	2	HACR	2160		2940	780	-	1	20	INTERIOR LIGHTING	40
41	"				2160	2850		690	-	1	20	INTERIOR LIGHTING	42
43	SPARE	20	1	-			0		-	1	20	SPARE	44
45	SPARE	20	1	-		0			-	1	20	SPARE	46
47	SPARE	20	1	-			0		-	1	20	SPARE	48
49	SPARE	20	1	-		0			-	1	20	SPARE	50
51	SPARE	20	1	-			0		-	1	20	SPARE	52
53	SPARE	20	1	-		0			-	1	20	SPARE	54

ENCLOSURE ACCESSORIES: CH, FL
PANELBOARD ACCESSORIES: GB, CBB

CIRCUIT BREAKER ACCESSORIES:
AC - AUXILIARY CONTACTS
EO - ELECTRICAL OPERATOR
GFCI - GROUND-FAULT INTERRUPTING
HACR - HACR RATING
HLF - HANDLE LOCK-OFF
HLN - HANDLE LOCK-ON
SR - SWITCH RATING
ST - SHUNT TRIP

ENCLOSURE ACCESSORIES:
CH - CONCEALED HINGE
CW - COLUMN WIDTH PANEL
DWD - HINGED DOOR WITHIN HINGED DOOR
EGT - EXTENDED GUTTER TOP
EGB - EXTENDED GUTTER BOTTOM
EGSL - EXTENDED GUTTER LEFT HAND SIDE
EGSR - EXTENDED GUTTER RIGHT HAND SIDE
FL - FLUSH LOCK(S)

PANELBOARD ACCESSORIES:
CL - COMPRESSION LUGS
FTL - FEED-THRU LUGS
GB - EQUIPMENT GROUND BAR KIT
IGB - INSULATED GROUND BAR KIT
NBK - NEUTRAL BONDING KIT
PS - PREPARED CIRCUIT BREAKER SPACE
SB - SPLIT BUS
SER - SERVICE ENTRANCE RATING
SFB - SUB-FEED CIRCUIT BREAKER
SFL - SUB-FEED LUGS
CBB - TIN PLATED COPPER BUS BARS
ABB - TIN PLATED ALUMINUM BUS BARS
TRN - 200% RATED NEUTRAL BUS BAR
TVSS - TRANSIENT VOLTAGE SURGE SUPPRESSION

APPROVED MANUFACTURERS:
EATON, GE, SIEMENS

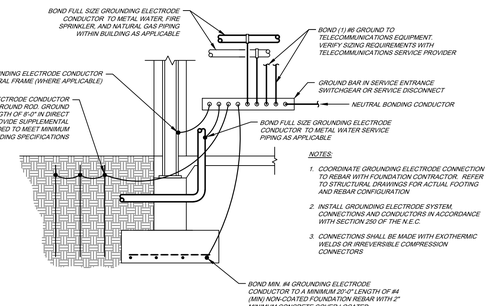

NOTES:
1. COORDINATE GROUNDING ELECTRODE CONNECTION TO REBAR WITH FOUNDATION CONTRACTOR. REFER TO STRUCTURAL DRAWINGS FOR ACTUAL FOOTING AND REBAR CONFIGURATION
2. INSTALL GROUNDING ELECTRODE SYSTEM CONNECTIONS AND CONDUCTORS IN ACCORDANCE WITH SECTION 250 OF THE N.E.C.
3. CONNECTIONS SHALL BE MADE WITH EXOTHERMIC WELDS OR IRREVERSIBLE COMPRESSION CONNECTORS

3 GROUNDING ELECTRODE DETAIL
NO SCALE

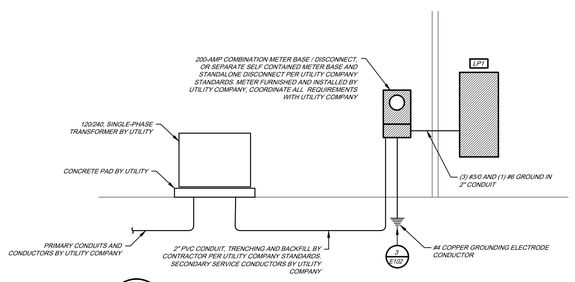

2 ELECTRICAL RISER DIAGRAM
NO SCALE

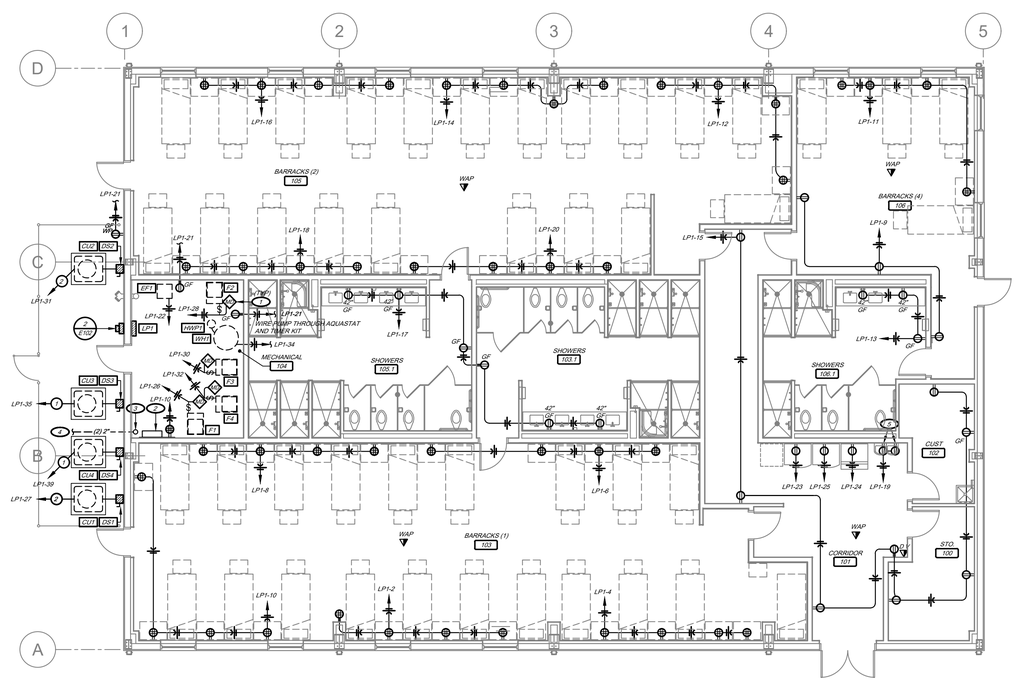

1 POWER PLAN
1/8" = 1'-0"
NORTH

KEYNOTES:

1. PROVIDE POWER TO MOTORIZED DAMPERS. FIELD COORDINATE EXACT LOCATIONS WITH MECHANICAL CONTRACTOR.
2. LOW-VOLTAGE PATCH PANEL AND ENCLOSURE INSTALLED ON PHONE BOARD.
3. (2) 2" COMMUNICATIONS CONDUIT STUBBED UP TO PHONE BOARD.
4. REFER TO CIVIL PLANS FOR CONTINUATION.
5. INSTALL RECEPTACLES CONCEALED BEHIND DRINKING FOUNTAIN ENCLOSURE PER MANUFACTURER'S INSTRUCTIONS.

GENERAL ELECTRICAL NOTES:

1. GENERAL NOTES AND DETAILS ON THIS SHEET APPLY TO ALL ELECTRICAL SHEETS. REFER TO SPECIFICATIONS FOR ADDITIONAL REQUIREMENTS.
2. THE PLANS ARE DIAGRAMMATIC AND SHALL NOT BE SCALED. REFER TO ARCHITECTURAL DRAWINGS AND EXISTING CONDITIONS FOR DIMENSIONS. FIELD VERIFY DIMENSIONS.
3. THE CONTRACTOR SHALL SCHEDULE AND EXECUTE THE WORK WITH REGARD TO THE OWNER'S USE OF EXISTING PORTIONS OF PROPERTY.
4. COOPERATE CLOSELY WITH ALL OTHER TRADES TO EXPEDITE CONSTRUCTION AND AVOID INTERFERENCES AND CONFLICTS. COORDINATE LOCATIONS OF CONDUITS, RACEWAYS, SUPPORTS, ETC. WITH ALL TRADES PRIOR TO ROUGH-IN. YIELD RIGHT OF WAY TO SYSTEMS REQUIRED TO BE INSTALLED AT A SLOPE.
5. COORDINATE REQUIRED CLEARANCES ABOUT AND ABOVE ELECTRICAL EQUIPMENT WITH PLUMBING, HVAC AND OTHER TRADES TO KEEP DUCTWORK, PIPING, ETC. FROM BEING INSTALLED ABOVE ELECTRICAL EQUIPMENT.
6. COORDINATE LIGHT FIXTURE LOCATIONS WITH ARCHITECTURAL REFLECTED CEILING PLANS. COORDINATE LOCATIONS OF WALL MOUNTED LIGHT FIXTURES WITH ARCHITECTURAL INTERIOR ELEVATIONS PRIOR TO ROUGH-IN.
7. COORDINATE WALL MOUNTED SWITCH, RECEPTACLE, TELEPHONE, DATA, AND OTHER ELECTRICAL SYSTEM DEVICE LOCATIONS WITH ARCHITECTURAL INTERIOR AND MILLWORK ELEVATION DRAWINGS PRIOR TO ROUGH-IN.
8. THERMOSTATS, SENSORS, DAMPERS AND HVAC EQUIPMENT CONTROL WIRING SHALL BE FURNISHED BY HVAC CONTRACTOR. THE ELECTRICAL CONTRACTOR SHALL FURNISH AND INSTALL THE NECESSARY CONDUIT AND BOXES FOR THE INSTALLATION OF DEVICES AND CABLING.
9. WHERE SHOWN ADJACENT TO LIGHT SWITCHES, JUNCTION BOXES FOR SENSORS, ETC. SHALL BE INSTALLED TO ALLOW 3'-6" BETWEEN EDGE OF SENSOR AND SWITCH COVERPLATE. WHERE SHOWN NOT ADJACENT TO LIGHT SWITCHES, JUNCTION BOXES FOR SENSORS, ETC. SHALL BE LOCATED WITHIN 12" OF NEAREST INSIDE OR OUTSIDE CORNER, NOT IN CENTER SECTION OF WALLS. ALL LOCATIONS SHALL BE SUBJECT TO APPROVAL BY ARCHITECT, ENGINEER, AND/OR OWNER.
10. INSTALL RECEPTACLES ADJACENT TO PHONE, DATA, TV, ETC. OUTLETS WHERE SHOWN IN SAME LOCATION.
11. ALL BRANCH CIRCUITS OR FEEDERS SHALL BE INSTALLED WITH AN EQUIPMENT GROUNDING CONDUCTOR.
12. ROUTE ALL EXPOSED CONDUIT TIGHT TO STRUCTURE IN A NEAT AND ORDERLY FASHION.

CONDUIT & CONDUCTOR SCHEDULE:

1. (2) #10 AND (1) #10 GROUND IN 0.5" CONDUIT.
2. (2) #8 AND (1) #10 GROUND IN 0.75" CONDUIT.
3. (2) #6 AND (1) #10 GROUND IN 0.75" CONDUIT.

ELECTRICAL SYMBOLS:

- SIMPLEX RECEPTACLE; 2P, 3W, 15A OR 20A, 125V
- 14-30 SIMPLEX RECEPTACLE; NEMA CONFIGURATION AS INDICATED
- DUPLEX RECEPTACLE; 2P, 3W, 15A OR 20A, 125V
- 42" DUPLEX RECEPTACLE; MOUNTED @ 42" ABOVE FINISHED FLOOR
- AC DUPLEX RECEPTACLE; MOUNTED 6" ABOVE COUNTERTOP BACKSPLASH
- C DUPLEX RECEPTACLE; INSTALLED FLUSH WITH CEILING
- GF DUPLEX RECEPTACLE W/ GROUND FAULT INTERRUPTER
- WP DUPLEX RECPTACLE; WEATHERPROOF
- DOUBLE DUPLEX RECEPTACLE WITH COMMON FACEPLATE
- RECEPTACLE MOUNTED IN FLUSH FLOOR BOX. REFER TO SPECIFICATIONS
- D V COMBINATION VOICE & DATA TELECOMMUNICATIONS OUTLET; ROUGH-IN JUNCTION BOX OR PLASTER RING, (1) CAT6 VOICE CABLE & (1) CAT6 DATA CABLE ROUTED TO PATCH PANEL. COVER PLATE & JACK
- WAP DATA TELECOMMUNICATIONS OUTLET INSTALLED FLUSH WITH CEILING; ROUGH-IN JUNCTION BOX OR PLASTER RING, (1) CAT6 DATA CABLE ROUTED TO PATCH PANEL. COVER PLATE & JACK
- TV CABLE TV OUTLET; ROUGH-IN JUNCTION BOX OR PLASTER RING ONLY. CABLE, COVER PLATE & JACKS PROVIDED BY OTHERS.
- J JUNCTION BOX
- LIGHTING & POWER PANELBOARD
- CONDUIT CONCEALED IN CEILING OR WALL
- CONDUIT BELOW GRADE
- HOME RUN; TICK MARKS INDICATE NUMBER OF WIRES, ARROWS INDICATE NUMBER OF CIRCUITS
- GROUND WIRE
- 1 FEEDER PER SCHEDULE
- DISCONNECT SWITCH

STATE OF MISSOURI
MICHAEL L. KEHOE,
GOVERNOR

STATE OF MISSOURI — RYAN S. JONES — PE-2004017193 — PROFESSIONAL ENGINEER
06-12-25

RYAN S. JONES – ENGINEER
PE–2004017193

Missouri State Certificate of Authority #2005026903

CJD
Engineering | Energy | Innovation
2225 West Chesterfield Boulevard, Suite 200
Springfield, MO 65807
P: 417.877.1700 F: 417.324.7735
www.cjd-eng.com

OFFICE OF
ADMINISTRATION
DIVISION OF FACILITIES
MANAGEMENT, DESIGN
AND CONSTRUCTION

DEPT. OF PUBLIC SAFETY
MISSOURI NATIONAL GUA
DEPT. OF ADJUTANT GENE

CONSTRUCT NEW
44 SOLDIER BARRACKS
BUILDING 757

CAMP CROWDER
TRAINING SITE
890 RAY A CARVER DRIVE
NEOSHO, MISSOURI

PROJECT # T2234-01
SITE # 6260
ASSET # 8136260012

REVISION:
DATE:
REVISION:
DATE:
REVISION:
DATE:
ISSUE DATE: 06/12/2025

CAD DWG FILE: T2234-01-6260-8136230012
DRAWN BY: TJG
CHECKED BY: RSJ
DESIGNED BY: TJG

SHEET TITLE:
POWER PLAN

SHEET NUMBER:
E-102

31 OF 32 SHEETS
JUNE 12, 2025

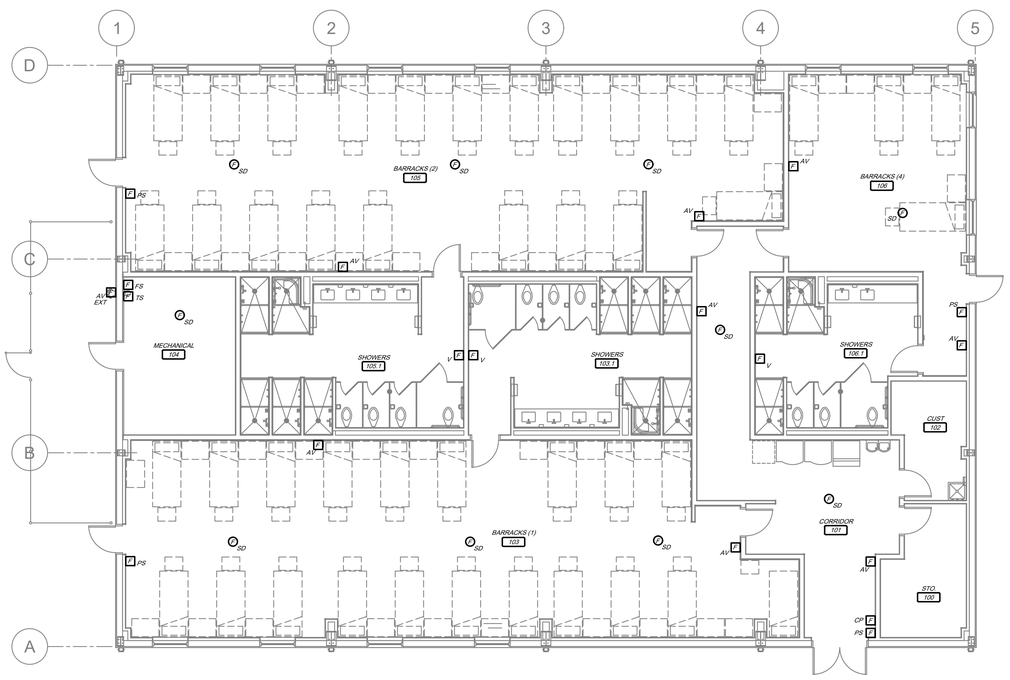

1 FIRE ALARM SYSTEM PLAN
1/8" = 1'-0"

NORTH

FIRE ALARM GENERAL NOTES:

1. PROVIDE FIRE ALARM SYSTEM INITIATION DEVICES AND NOTIFICATION APPLIANCES, MONITORING AND CONTROL DEVICES AS INDICATED ON THE DRAWINGS AND/OR AS REQUIRED PER SPECIFICATIONS, LATEST EDITION OF NFPA 72 OR AUTHORITY HAVING JURISDICTION(AHJ).
2. ALL FIRE ALARM WORK SHALL BE IN ACCORDANCE WITH THE LATEST EDITION OF NFPA 72 AND THE NATIONAL ELECTRICAL CODE.
3. FIRE ALARM SYSTEM WIRING SHALL BE PER MANUFACTURER'S INSTALLATION INSTRUCTIONS AND SHALL COMPLY WITH N.E.C. ARTICLE 760.
4. ALL EXPOSED FIRE ALARM SYSTEM WIRING SHALL BE IN CONDUIT. PAINT FIRE ALARM CONDUIT, JUNCTION BOXES AND FITTINGS RED.
5. ALL FIRE ALARM SYSTEM WIRING SHALL BE INSTALLED IN CONDUIT.
6. FIRE ALARM SYSTEM EQUIPMENT SUBMITTALS SHALL INCLUDE PRODUCT DATA SHEETS, FIRE ALARM SYSTEM PLAN, EQUIPMENT WIRING DIAGRAMS, SEQUENCE OF OPERATIONS, VOLTAGE DROP AND BATTERY CALCULATIONS. IN ADDITION TO SUBMITTALS BEING SUBMITTED TO A/E, SUBMITTALS SHALL BE SUBMITTED TO AUTHORITY HAVING JURISDICTION(AHJ) FOR REVIEW AND APPROVAL. AN APPROVED COPY AS SUBMITTED TO AHJ SHALL ALSO BE SUBMITTED TO A/E.
7. WHERE A POWER EXTENDER IS REQUIRED, PROVIDE POWER EXTENDER, ASSOCIATED 120-VOLT POWER SUPPLY AND A SMOKE DETECTOR IN SAME ROOM AS POWER EXTENDER.
8. IF SHOWN ON THE PLANS, CONTRACTOR SHALL PROVIDE ALL MAGNETIC DOOR HOLDERS, AND ALL CONTROL WIRING, TO CLOSE DOORS UPON DETECTION BY ASSOCIATED SMOKE DETECTOR. DOOR HOLDER FINISH SHALL MATCH ALL DOOR HARDWARE FINISH OF DOOR HARDWARE PROVIDED BY OTHERS.
9. FIRE ALARM SYSTEM SHALL BE INSTALLED IN ACCORDANCE WITH NFPA STANDARDS AND MANUFACTURER'S RECOMMENDATIONS, AND SHALL BE INSTALLED BY PERSONS WHO ARE QUALIFIED AND EXPERIENCED IN THE INSTALLATION, INSPECTION AND TESTING OF FIRE ALARM SYSTEMS. INSTALLER SHALL HAVE A MINIMUM OF 3 YEARS OF EXPERIENCE PERFORM OPERATIONAL SYSTEM TESTS UPON COMPLETION OF INSTALLATION. CORRECT DEFICIENCIES AND RETEST PRIOR TO OWNER OCCUPATION OF BUILDING. PROVIDE A COMPLETED NFPA 72 RECORD OF COMPLETION FORM TO THE OWNER AND AUTHORITY HAVING JURISDICTION.
10. FIRE ALARM SYSTEM CONTROL PANEL SHALL ALLOW FOR DETECTOR SENSITIVITY ADJUSTMENT AND TESTING, AND SHALL INCLUDE INDIVIDUAL CONTROLS [AT CONTROL PANEL] FOR TESTING AUDIBLE APPLIANCES AND VISUAL STROBES.

FIRE ALARM SYMBOLS:

AV	CEILING MOUNTED AUDIO/VISUAL FIRE ALARM ANNUNCIATING DEVICE
SD	CEILING MOUNTED SMOKE DETECTOR
DD	DUCT MOUNTED SMOKE DETECTOR WITH SAMPLING TUBE. INSTALL AT RETURN DUCT UNLESS OTHERWISE NOTED
CP	FIRE ALARM SYSTEM CONTROL PANEL
AV	WALL MOUNTED AUDIO/VISUAL FIRE ALARM ANNUNCIATING DEVICE
FA	REMOTE ANNUCIATOR PANEL
FS	FLOW SWITCH
PS	MANUAL PULL STATION
TS	TAMPER SWITCH
V	WALL MOUNTED VISUAL FIRE ALARM ANNUNCIATING DEVICE
AV EXT	WALL MOUNTED EXTERIOR AUDIO/VISUAL FIRE ALARM ANNUNCIATING DEVICE

STATE OF MISSOURI
MICHAEL L. KEHOE,
GOVERNOR

STATE OF MISSOURI
RYAN S. JONES
PE-2004017193
PROFESSIONAL ENGINEER

06-12-25

RYAN S. JONES – ENGINEER
PE–2004017193

Missouri State Certificate of Authority #2005026903

CJD
Engineering | Energy | Innovation
2225 West Chesterfield Boulevard, Suite 200
Springfield, MO 65807
P: 417.877.1700 F: 417.324.7735
www.cjd-eng.com

OFFICE OF ADMINISTRATION
DIVISION OF FACILITIES MANAGEMENT, DESIGN AND CONSTRUCTION

DEPT. OF PUBLIC SAFETY
MISSOURI NATIONAL GUA
DEPT. OF ADJUTANT GENE

CONSTRUCT NEW
44 SOLDIER BARRACKS
BUILDING 757

CAMP CROWDER
TRAINING SITE
890 RAY A CARVER DRIVE
NEOSHO, MISSOURI

PROJECT # T2234-01
SITE # 6260
ASSET # 8136260012

REVISION:
DATE:
REVISION:
DATE:
REVISION:
DATE:
ISSUE DATE: 06/12/2025

CAD DWG FILE: T2234-01-6260-8136230012
DRAWN BY: TJG
CHECKED BY: RSJ
DESIGNED BY: TJG

SHEET TITLE:
FIRE ALARM SYSTEM PLAN

SHEET NUMBER:
E-103

32 OF 32 SHEETS
JUNE 12, 2025