Electrification Improvement
Harry S Truman State Park - Devil's Backbone Campground
Warsaw, Missouri

Midwest
Engineering & Design
WWW.MOENGINEERING.COM
COLUMBIA, MO
573 875-0045
MECHANICAL, ELECTRICAL AND PLUMBING DESIGN

DRAWING INDEX

G-001 - COVER SHEET, PROJECT DATA
E-101 - ELECTRICAL DEMOLITION PLAN
E-102 - ELECTRICAL RENOVATION PLAN
E-501 - ELECTRICAL RISER AND DETAILS
E-601 - ELECTRICAL RISER AND PANEL SCHEDULES

OWNER: STATE OF MISSOURI
MICHAEL L. PARSON,
GOVERNOR

DEPARTMENT OF NATURAL RESOURCES
PARKS & HISTORICAL PRESERVATION

PROJECT MANAGEMENT: OFFICE OF ADMINISTRATION
DIVISION OF FACILITIES MANAGEMENT
DESIGN AND CONSTRUCTION

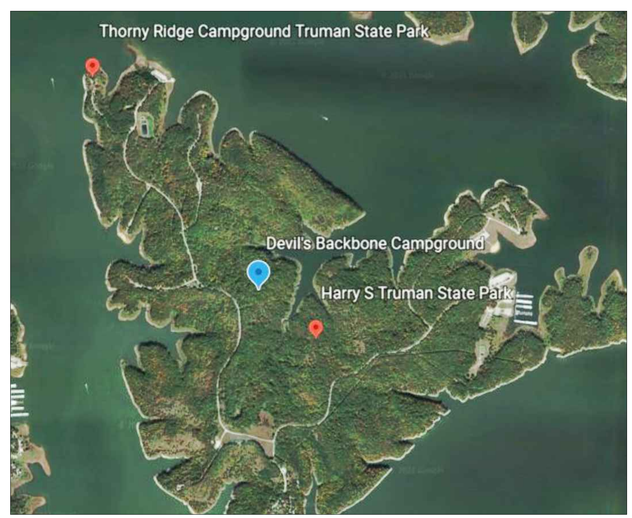

DESIGNER: JAMES DOVE P.E.
JDOVE@MOENGINEERING.COM

PROJECT NUMBER: X2107-01

SITE NUMBER: 5604
FACILITY NUMBER: 7815604032

SHEET NUMBER:

G-001

CONSTRUCTION NOTES

1. REMOVE ALL EXISTING SPLICE BOXES AND CAMP SITE POWER PEDESTALS. THE EXISTING ALUMINUM SERVICE WIRE CAN BE CUT OFF BELOW GRADE AND ABANDONED.
2. THE NEW 50A POWER PEDESTAL AT CAMP SITE 3 IS TO BE REMOVED AND RETAINED FOR REINSTALLATION.
3. REMOVE ANY EXPOSED CONDUIT OR WIRE TO BELOW GRADE. WIRE OR CONDUIT BELOW GRADE CAN BE ABANDONED IN PLACE.
4. THE INFORMATION SHOWN ON THIS PLAN WAS GATHERED THROUGH MULTIPLE SITE VISITS AND FIELD TAKE-OFF. CARE WAS TAKEN TO SHOW THE TREE LOCATIONS AND SIZES AS ACCURATELY AS POSSIBLE. THE CONTRACTOR SHALL BE RESPONSIBLE TO FIELD VERIFY THE ACCURACY AND MAKE ADJUSTMENTS WHERE REQUIRED.
5. THE EXISTING CONDUCTORS WERE FIELD VERIFIED TO BE 24" BELOW GRADE. THE NEW CONDUCTORS ARE EXPECTED TO FOLLOW THE SAME ROUTING AND THUS ROCK SHOULD NOT BE AN ISSUE WITH TRENCHING. THE ROUTING MAY VARY SLIGHTLY TO AVOID DAMAGE TO MATURE TREES, WHICH HAVE GROWN UP SINCE THE ORIGINAL CAMPGROUND ELECTRIFICATION.

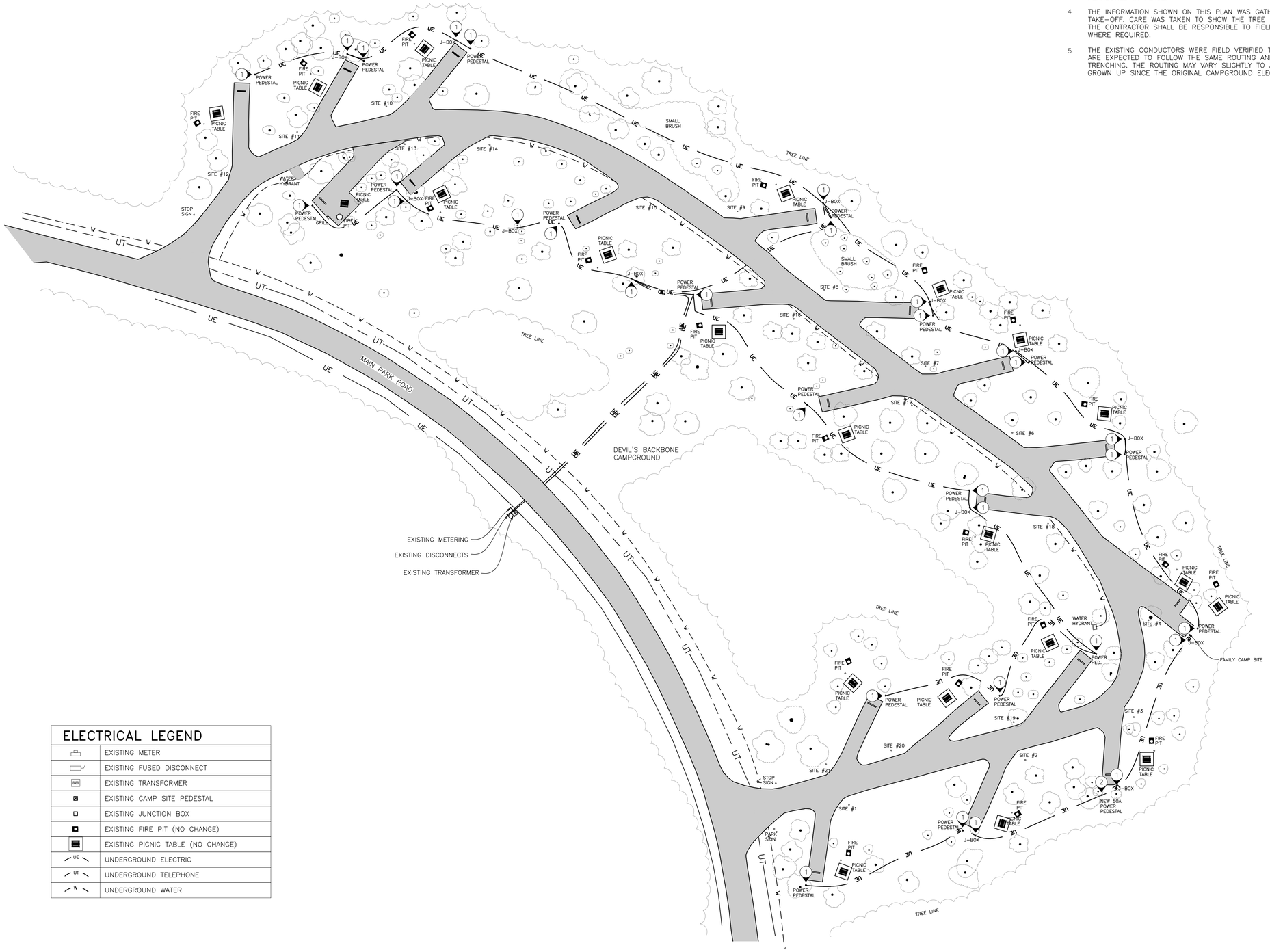

1 DEVIL'S BACKBONE CAMPGROUND ELECTRICAL DEMOLITION PLAN

SCALE: 1"=40'-0"

ELECTRICAL LEGEND

	EXISTING METER
	EXISTING FUSED DISCONNECT
	EXISTING TRANSFORMER
	EXISTING CAMP SITE PEDESTAL
	EXISTING JUNCTION BOX
	EXISTING FIRE PIT (NO CHANGE)
	EXISTING PICNIC TABLE (NO CHANGE)
UE	UNDERGROUND ELECTRIC
UT	UNDERGROUND TELEPHONE
W	UNDERGROUND WATER

STATE OF MISSOURI
MICHAEL L. PARSON,
GOVERNOR

STATE OF MISSOURI
JAMES L. DOVE
NUMBER
PE-2002016644
PROFESSIONAL ENGINEER
08-15-22

PROFESSIONAL SEAL

Midwest Engineering & Design
3100 Brown Station Rd. Suite C
Columbia, MO. 65202
(573) 875-0045 Phone
(573) 875-0046 FAX
WWW.MOENGINEERING.COM
Midwest Engineering & Design
Missouri State Certificate of Authority #2010032467

OFFICE OF ADMINISTRATION
DIVISION OF FACILITIES MANAGEMENT,
DESIGN AND CONSTRUCTION

DEPARTMENT OF NATURAL RESOURCES - PARKS & HISTORIC PRESERVATION

ELECTRIFICATION IMPROVEMENT

HARRY S TRUMAN STATE PARK
DEVIL'S BACKBONE CAMPGROUND
28761 STATE PARK RD. WEST
WARSAW, MISSOURI 65355

PROJECT #	X2107-01
SITE#	5604
ASSET#	7815604032

REVISION:
DATE:
REVISION:
DATE:
REVISION:
DATE:
ISSUE DATE: 08/15/2022

CAD DWG FILE: HSTSP-e.dwg
DRAWN BY: MDS
CHECKED BY: JLD
DESIGNED BY: JLD

SHEET TITLE:

ELECTRICAL DEMOLITION PLAN

SHEET NUMBER:

E-101

2 OF 5 SHEETS
08/15/2022

CONSTRUCTION NOTES

1. WORK WITH LOCAL UTILITY (SWEC – CONTACT: ADRIAN 417-722-4491) TO INSTALL A NEW PRIMARY VAULT. CONTRACTOR SHALL BE RESPONSIBLE FOR EXCAVATING A ~4'X4'X40" HOLE TO ALLOW FOR NEW PRE-CAST VAULT. CONTRACTOR SHALL SUPPLY ~ ONE SKID STEER BUCKET OF 1" FINES OR SMALLER TO HELP LEVEL VAULT AND FOR BACKFILLING PURPOSES. UTILITY COMPANY SHALL SUPPLY NEW PRE-CAST VAULT, PRIMARY CONDUITS AND CONDUCTORS, TRANSFORMER, AND METERING, SEE DETAIL 2 ON SHEET E-501. SWEC WILL DISCONNECT PRIMARY POWER BEFORE ANY DIGGING. COORDINATE THIS OUTAGE 1 WEEK PRIOR TO WORK WITH PARK STAFF AND UTILITY CO.
2. BORE SECONDARY CONDUIT UNDER PARK ROAD AND CAMP ROAD. TRANSITION FROM DIRECT BURIAL TO CONDUIT FOR THE SECTION OF SECONDARY WIRE PASSING UNDER THE ROADS.
3. TRENCH TO EACH CAMP SITE FOLLOWING THE ROUTE OF EXISTING CONDUCTORS AS SHOWN. EXISTING CONDUCTORS WERE INSTALLED 24" BELOW GRADE. ANY TRENCHING CLOSER THAN 5' TO THE BASE OF A MATURE TREE, 10" IN DIAMETER OR MORE, SHALL BE DONE WITH AN AIR SPADE TO PREVENT DAMAGING THE TREES ROOTS.
4. INSTALL CONDUIT AND CONDUCTORS AS SHOWN ON RISER DIAGRAM ON SHEET E-501 & E-601.
5. INSTALL NEW 400A 120/240V MAIN LUG ONLY PANEL "A" FOR OUTER LOOP SITES, SEE RISER DIAGRAM DETAIL 5 ON SHEET E-601. COORDINATE WITH PARK STAFF ON FINAL PLACEMENT AND ORIENTATION.
6. INSTALL NEW 400A 120/240V MAIN LUG ONLY PANEL "B" FOR INNER LOOP SITES, SEE RISER DIAGRAM DETAIL 4 ON SHEET E-601. COORDINATE WITH PARK STAFF ON FINAL PLACEMENT AND ORIENTATION.
7. INSTALL MILBANK U5200-XL-75, OR EQUIVALENT, 125A UNMETERED 120/240VAC POWER OUTLET PEDESTAL. SUPPLY WITH THE FOLLOWING RECEPTACLE CONFIGURATION (1) 14-50R, (1) TT30R, (1) 5-20R GFI. REUSE THE PEDESTAL REMOVED FROM SITE 3 DURING DEMOLITION, FOR ONE OF THE SITES. EQUIVALENT MANUFACTURERS ARE: MIDWEST ELECTRIC PRODUCTS AND EATON.
8. PER NEC 551.77, EACH CAMP SITE PEDESTAL SHALL BE LOCATED BETWEEN 5' TO 7' FROM THE LEFT EDGE (DRIVERS SIDE) OF THE PARKING PAD AND FROM THE REAR TO 15' FORWARD OF THE REAR OF THE PAD. TRUMAN STATE PARK STAFF PREFER THE PEDESTAL LOCATION TO BE AT THE REAR OF PAD. COORDINATE THE FINAL LOCATION OF EACH PEDESTAL WITH PARK STAFF PRIOR TO CONSTRUCTION.
9. INSTALL A SECOND PEDESTAL AT THE FAMILY CAMP SITE #4. LOCATE THE FIRST PEDESTAL AT THE REAR AND THE SECOND PEDESTAL 15' FORWARD OF THE REAR. SHOWN AS #4A AND #4B ON DETAIL 5, SHEET E-601.
10. INSTALL REFLECTIVE ROAD CLOSED SIGN DURING THE CONSTRUCTION PERIOD.
11. CONTRACTOR TO AVOID HITTING EXISTING WATER LINE WHEN TRENCHING TO OR BORING BENEATH ROAD. ANY REPAIR COSTS DUE TO DAMAGE TO WATER LINE WILL BE ON THE CONTRACTOR.

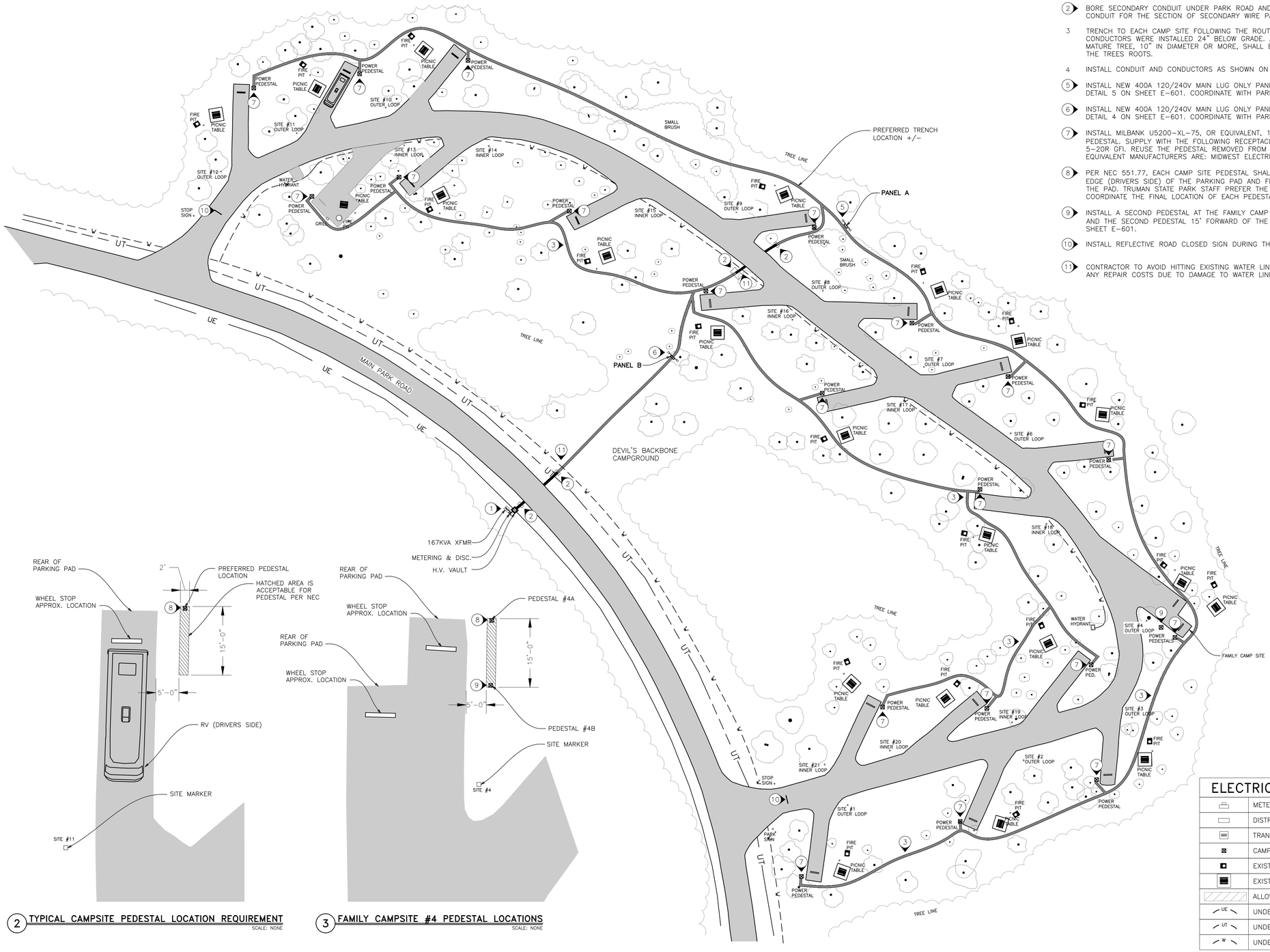

1 EXISTING DEVIL'S BACKBONE CAMPGROUND ELECTRICAL
SCALE: 1"=40'-0"

2 TYPICAL CAMPSITE PEDESTAL LOCATION REQUIREMENT
SCALE: NONE

3 FAMILY CAMPSITE #4 PEDESTAL LOCATIONS
SCALE: NONE

ELECTRICAL LEGEND

	METER
	DISTRIBUTION PANEL
	TRANSFORMER
	CAMP SITE PEDESTAL
	EXISTING FIRE PIT (NO CHANGE)
	EXISTING PICNIC TABLE (NO CHANGE)
	ALLOWABLE AREA PER CODE FOR PEDESTAL
UE	UNDERGROUND ELECTRIC
UT	UNDERGROUND TELEPHONE
W	UNDERGROUND WATER LINE

STATE OF MISSOURI
MICHAEL L. PARSON,
GOVERNOR

STATE OF MISSOURI
JAMES L. DOVE
NUMBER PE-2002016644
PROFESSIONAL ENGINEER
08-15-22

PROFESSIONAL SEAL

Midwest Engineering & Design
3100 Brown Station Rd. Suite C
Columbia, MO. 65202
(573) 875-0045 Phone
(573) 875-0046 FAX
WWW.MOENGINEERING.COM
Midwest Engineering & Design
Missouri State Certificate of Authority #2010032467

OFFICE OF ADMINISTRATION
DIVISION OF FACILITIES MANAGEMENT,
DESIGN AND CONSTRUCTION

DEPARTMENT OF NATURAL RESOURCES - PARKS & HISTORIC PRESERVATION

ELECTRIFICATION IMPROVEMENT

HARRY S TRUMAN STATE PARK
DEVIL'S BACKBONE CAMPGROUND
28761 STATE PARK RD. WEST
WARSAW, MISSOURI 65355

PROJECT # X2107-01
SITE# 5604
ASSET# 7815604032

REVISION:
DATE:
REVISION:
DATE:
REVISION:
DATE:
ISSUE DATE: 08/15/2022

CAD DWG FILE: HSTSP-e.dwg
DRAWN BY: MDS
CHECKED BY: JLD
DESIGNED BY: JLD

SHEET TITLE:
ELECTRICAL RENOVATION PLAN

SHEET NUMBER:
E-102

3 OF 5 SHEETS
08/15/2022

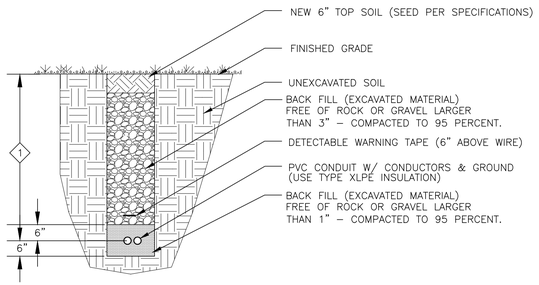

1 DIRECT BURIAL CABLE AND CONDUIT 24" MINIMUM BELOW GRADE.

RELEVANT SPECIFICATION SECTIONS: 015713–EROSION CONTROL, 312200–GRADING, 312316.13–TRENCHING, 329219–SEEDING

3 **UTILITY TRENCH DETAIL**
NO SCALE

ELECTRICAL SERVICE DIVISION OF RESPONSIBILITY

	ELEC. CONTR.	UTILITY CO.		ELEC. CONTR.	UTILITY CO.
PRIMARY CONDUIT	☐	X	SECONDARY CONDUIT	X	☐
PRIMARY CONDUCTORS	☐	X	SECONDARY CONDUCTORS	X	☐
TRANSFORMER	☐	X	C/Ts	☐	X
TRANSFORMER PAD	☐	X	METER BASE	☐	X
TRANSFORMER CONNECTIONS	☐	X	METER	☐	X
			TEST AND ENERGIZE	☐	X

POWER UTILITY CONTACT:

SOUTHWEST ELECTRIC COOPERATIVE
UTILITY ENGINEER: ADRIAN
PHONE: (417) 722–4491

NOTES:
1. COORDINATE ALL SERVICE WORK WITH LOCAL UTILITY ENGINEER PRIOR TO START OF WORK.
2. ALL ELECTRICAL WORK SHALL BE DONE TO CURRENT NEC AND LOCAL UTILITY STANDARDS.

6 **ELECTRICAL SERVICE DIVISION OF RESPONSIBILITY**
NO SCALE

NOTES

(N) INDICATES KEYED NOTES

1. ELECTRICAL CONTRACTOR SHALL REMOVE EXISTING SERVICE, INCLUDING FUSED DISCONNECTS, UNISTRUT SUPPORTS, CONDUIT, AND WIRE. COORDINATE WITH LOCAL UTILITY ON THE REMOVAL OF EXISTING TRANSFORMER AND METER. ANY WIRE BELOW GRADE CAN BE ABANDONED.
2. WORK WITH LOCAL UTILITY TO INSTALL A NEW PRIMARY VAULT. CONTRACTOR SHALL BE RESPONSIBLE FOR EXCAVATING A ~4'X4'X4'X40" HOLE TO ALLOW FOR A NEW PRE–CAST VAULT. CONTRACTOR SHALL SUPPLY ~ ONE SKID STEER BUCKET OF 1" FINES OR SMALLER TO HELP LEVEL VAULT AND FOR BACKFILLING PURPOSES. UTILITY COMPANY SHALL SUPPLY NEW PRE–CAST VAULT. SWEC WILL DISCONNECT PRIMARY POWER BEFORE ANY DIGGING. COORDINATE THIS OUTAGE 1 WEEK PRIOR TO WORK WITH PARK STAFF AND UTILITY CO (SWEC – CONTACT: ADRIAN 417–722–4491).
3. LOCAL UTILITY SHALL INSTALL NEW PAD MOUNTED TRANSFORMER, PRIMARY CONDUIT, PRIMARY WIRE, C.T.'S, AND METER.
4. ELECTRICAL CONTRACTOR TO INSTALL (1) 1" GRS CONDUIT FROM TRANSFORMER SECONDARY TO NEW METER BASE. CONTRACTOR SHALL INSTALL NEW METER BASE, SUPPLIED BY UTILITY. COORDINATE ALL WORK WITH LOCAL UTILITY.
5. ELECTRICAL CONTRACTOR SHALL INSTALL ALL SECONDARY CONDUIT AND WIRE. WIRE FROM TRANSFORMER TO DISCONNECT SHALL BE INSTALLED IN PROPERLY SIZED CONDUIT. WIRE INSTALLED BELOW ROAD WAYS AND WIRE EXPOSED ABOVE GRADE SHALL BE INSTALLED IN CONDUIT. ALL OTHER CIRCUITS CAN BE INSTALLED AS DIRECT BURIAL. SEE CIRCUIT SCHEDULE DETAIL 3 ON SHEET E–601 FOR SIZING.
6. BORE SECONDARY PVC CONDUIT UNDER PARK ROAD AND CAMP ROAD. TRANSITION FROM DIRECT BURIAL TO CONDUIT FOR THIS SECTION OF SECONDARY WIRE PASSING UNDER THE ROADS.
7. INSTALL NEW RACK COMPRISED OF 4" IRON PIPE AND HEAVY DUTY GALVANIZED UNISTRUT TO SUPPORT NEW METER, SERVICE DISCONNECTS, AND DISTRIBUTION PANELS. PIPE SHALL BE SET A MINIMUM OF 4' BELOW GRADE AND UNISTRUT SHALL BE SPACED TO SUPPLY ADEQUATE SUPPORT FOR PANELS AND CONDUIT.
8. INSTALL NEW NEMA 3R PANEL TO FEED CAMP SITE PEDESTALS, SEE RISER DIAGRAM DETAIL 4 & 5 ON SHEET E–601 FOR MORE SPECIFICATIONS.
9. INSTALL GRS CONDUIT FROM PANEL TO 18" BELOW GRADE AND THEN TRANSITION TO DIRECT BURIAL CABLE. USE SEALING LOCKNUTS ON CONDUIT CONNECTORS IN PANEL, AND BUSHINGS ON CONDUIT END BELOW GRADE. INSTALL CONDUIT SEALING FITTING ON GRS CONDUIT BELOW PANEL. ONCE ALL WIRE HAS BEEN INSTALLED AND TERMINATED INSTALL SEALING COMPOUND TO PREVENT THE MIGRATION OF MOISTURE FROM THE CONDUIT INTO THE PANEL.
10. INSTALL 125A PEDESTAL AT EACH CAMP SITE. ONCE ALL WIRES HAVE BEEN TERMINATED APPLY CRC, OR EQUIVALENT, HEAVY DUTY CORROSION INHIBITOR TO THE METAL TERMINAL LUGS. APPLY A VINYL DECAL WITH THE FOLLOWING INSTRUCTIONS ON THE PEDESTAL NEAR THE BREAKERS "TURN 50A CIRCUIT BREAKERS OFF BEFORE INSERTING OR REMOVING PLUG".
11. CIRCUIT BETWEEN PANEL AND PEDESTAL SHALL TRANSITION FROM GRS TO DIRECT BURIAL ONCE IT'S 18" OR DEEPER. CIRCUIT FROM PEDESTAL TO PEDESTAL SHALL BE DIRECT BURIAL 24" DEEP.
12. CONTRACTOR TO INSTALL (1) SETS OF 2–500MCM CU THWN AND 1–300MCM CU THWN IN (1) 3" PVC FROM XFMR SECONDARY TO OUTER LOOP DISCONNECT.
13. CONTRACTOR TO INSTALL (1) SETS OF 2–350MCM CU THWN AND 1–250MCM CU THWN IN (1) 3" PVC FROM XFMR SECONDARY TO INNER LOOP DISCONNECT.
14. SUPPLY (2) 400A FUSED DISCONNECTS, ONE FUSED AT 300A AND ONE FUSED AT 400A. BOND THE NEUTRAL AND GROUND TOGETHER AT THESE DISCONNECTS ONLY. GROUND AND NEUTRAL SHALL REMAIN ISOLATED FROM EACH OTHER AT ALL OTHER LOCATIONS. SUPPLY TWO SPARE SETS OF 400A AND TWO SPARE SETS OF 300A FUSES TO OWNER AT END OF PROJECT.

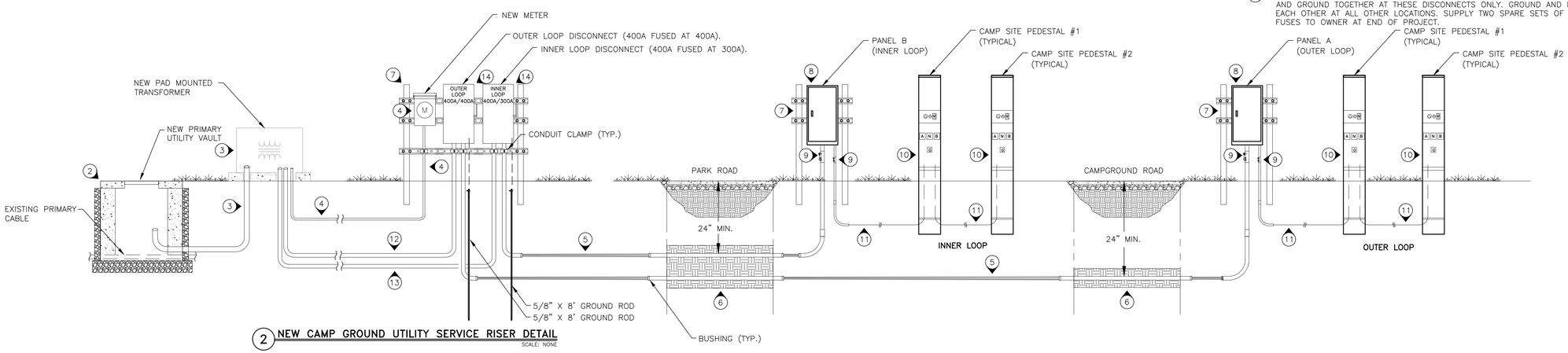

2 **NEW CAMP GROUND UTILITY SERVICE RISER DETAIL**
SCALE: NONE

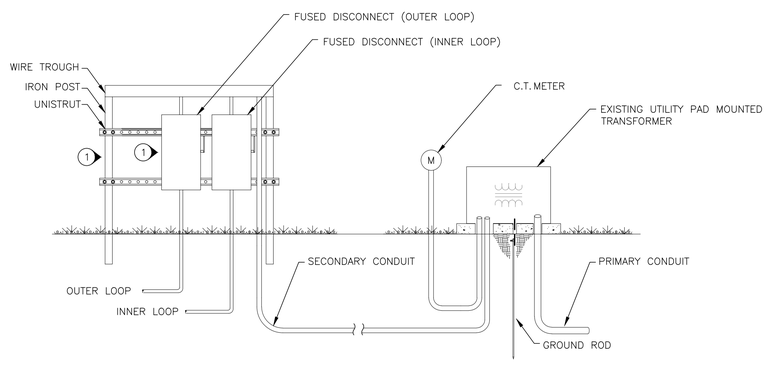

1 **EXISTING CAMP GROUND ELECTRIC UTILITY SERVICE DETAIL**
SCALE: NONE

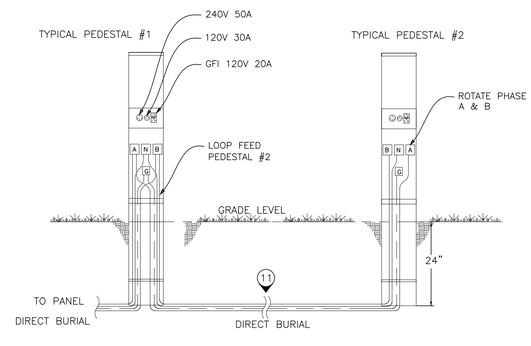

4 **TYPICAL PEDESTAL WIRING DIAGRAM**
SCALE: NONE

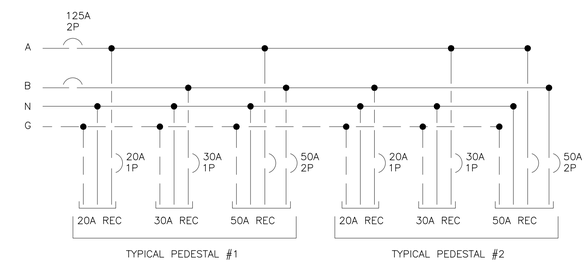

5 **TYPICAL PEDESTAL WIRING DIAGRAM**
SCALE: NONE

STATE OF MISSOURI
MICHAEL L. PARSON,
GOVERNOR

STATE OF MISSOURI
JAMES L. DOVE
NUMBER
PE-2002016644
PROFESSIONAL ENGINEER
08-15-22

PROFESSIONAL SEAL

Midwest Engineering & Design
3100 Brown Station Rd. Suite C
Columbia, MO. 65202
(573) 875-0045 Phone
(573) 875-0046 FAX
WWW.MOENGINEERING.COM
Midwest Engineering & Design
Missouri State Certificate of Authority #2010032467

OFFICE OF ADMINISTRATION
DIVISION OF FACILITIES MANAGEMENT,
DESIGN AND CONSTRUCTION

DEPARTMENT OF NATURAL RESOURCES - PARKS & HISTORIC PRESERVATION

ELECTRIFICATION IMPROVEMENT

HARRY S TRUMAN STATE PARK
DEVIL'S BACKBONE CAMPGROUND
28761 STATE PARK RD. WEST
WARSAW, MISSOURI 65355

PROJECT # X2107-01
SITE# 5604
ASSET# 7815604032

REVISION:
DATE:
REVISION:
DATE:
REVISION:
DATE:
ISSUE DATE: 08/15/2022

CAD DWG FILE: HSTSP-e.dwg
DRAWN BY: MDS
CHECKED BY: JLD
DESIGNED BY: JLD

SHEET TITLE:
ELECTRICAL RISER AND DETAILS

SHEET NUMBER:
E-501

4 OF 5 SHEETS
08/15/2022

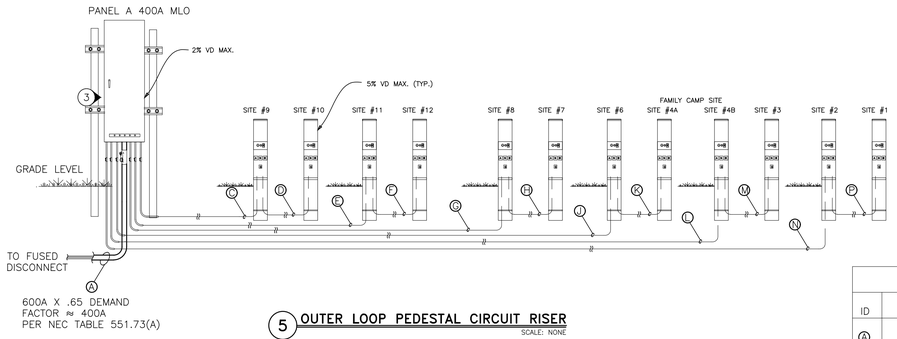

5 OUTER LOOP PEDESTAL CIRCUIT RISER
SCALE: NONE

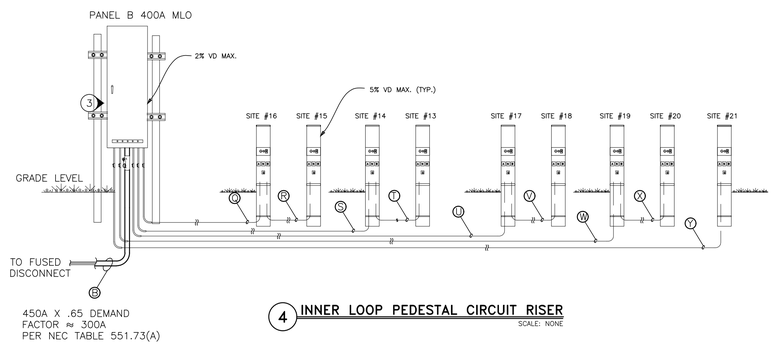

4 INNER LOOP PEDESTAL CIRCUIT RISER
SCALE: NONE

CIRCUIT SCHEDULE (CALCULATED WITH A SUPPLY VOLTAGE OF 120/240V 1ø 3W)

ID	DESCRIPTION	2 PHASE WIRES	NEUTRAL	GRND	CONDUIT *	DISTANCE **	VOLTAGE DROP
A	DISC. TO PANEL A	(2)-400 AWG	(2)-350	(2)-#2	(2)-3"	~335'	1.89%
B	DISC. TO PANEL B	(1)-400 AWG	(1)-350	(1)-#2	(1)-3"	~225'	1.88%
C	PANEL A TO PED#9	(1)-1/0 AWG	(1)-#1	(1)-#6	(1)-1 1/4"	~30'	0.3%
D	PED#9 TO PED#10	(1)-1/0 AWG	(1)-#1	(1)-#6	-	~360'	2.10%
E	PANEL A TO PED#11	(1)-4/0 AWG	(1)-3/0	(1)-#2	(1)-2"	~485'	2.52%
F	PED#11 TO PED#12	(1)-2/0 AWG	(1)-1/0	(1)-#6	-	~120'	3.02%
G	PANEL A TO PED#8	(1)-1/0 AWG	(1)-#1	(1)-#6	(1)-1 1/4"	~180'	1.80%
H	PED#8 TO PED#7	(1)-1/0 AWG	(1)-#1	(1)-#6	-	~126'	2.43%
J	PANEL A TO PED#6	(1)-4/0 AWG	(1)-3/0	(1)-#2	(1)-2"	~465'	2.42%
K	PED#6 TO PED#4A	(1)-3/0 AWG	(1)-2/0	(1)-#4	-	~195'	3.05%
L	PANEL A TO PED#4B	(1)-350 AWG	(1)-250	(1)-#2	(1)-2 1/2"	~660'	2.11%
M	PED#4B TO PED#3	(1)-1/0 AWG	(1)-#1	(1)-#4	-	~170'	2.96%
N	PANEL A TO PED#2	(1)-4/0 AWG	(1)-3/0	(1)-#2	(1)-2"	~980'	2.59%
P	PED#2 TO PED#1	(1)-1/0 AWG	(1)-#1	(1)-#6	-	~160'	2.96%
Q	PANEL B TO PED#16	(1)-#1 AWG	(1)-#1	(1)-#6	(1)-1 1/4"	~35'	.45%
R	PED#16 TO PED#15	(1)-#1 AWG	(1)-#1	(1)-#6	-	~180'	1.61%
S	PANEL B TO PED#14	(1)-3/0 AWG	(1)-2/0	(1)-#4	(1)-2"	~380'	2.45%
T	PED#14 TO PED#13	(1)-1/0 AWG	(1)-#1	(1)-#6	-	~122'	3.06%
U	PANEL B TO PED#17	(1)-2/0 AWG	(1)-1/0	(1)-#6	(1)-1 1/2"	~200'	1.67%
V	PED#17 TO PED#18	(1)-1/0 AWG	(1)-#1	(1)-#6	-	~205'	2.70%
W	PANEL B TO PED#19	(1)-250 AWG	(1)-4/0	(1)-#2	(1)-2 1/2"	~600'	2.62%
X	PED#19 TO PED#20	(1)-4/0 AWG	(1)-3/0	(1)-#2	-	~175'	3.07%
Y	PANEL B TO PED#21	(1)-3/0 AWG	(1)-2/0	(1)-#4	(1)-2"	~875'	2.82%

NOTES:
THE CONDUCTORS SHALL NOT BE SPLICED. EACH CIRCUIT SHALL BE INSTALLED AS A CONTINUOUS LENGTH OF WIRE.

ALL WIRE SHALL BE CU XHHW-2 OR XLP-USE-2 (ABRASION, MOISTURE, AND HEAT RESISTANT THERMOSET CROSS-LINKED POLYETHYLENE XLPE INSULATION) 600V, RATED FOR 90° CONTINUOUS OPERATION AND DIRECT BURIAL.

(X) = NUMBER OF SETS OF CONDUCTORS OR CONDUITS.

* CONDUIT SIZES LISTED ARE TO BE USED FROM PANEL TO 18" BELOW GRADE AND BORING BELOW ROADS.

** DISTANCES LISTED ARE ESTIMATES. CONTRACTOR SHALL FIELD VERIFY EXACT DISTANCE PRIOR TO BIDDING.

3 CIRCUIT SCHEDULE
SCALE: NONE

PANEL DESIGNATION: A										
VOLTAGE: 240 1PHASE 3WIRE	PANEL LOCATION: OUTER LOOP					TOTAL VOLTAMPS THIS PANEL				144000
MAINS: 400 A MLO	MOUNTING: SURFACE		PANEL SPACES: 24			TOTAL CONNECTED LOAD (AMPS)				600
			CONNECTED LOAD		CKT.	CONNECTED LOAD				
CIRCUIT DESIGNATION	WIRE	TRIP	A	B	NO.	A	B	TRIP	WIRE	CIRCUIT DESIGNATION
PEDESTALS 9 & 10	1/0	125A/2P	12000		1 2	12000		125A/2P	4/0	PEDESTALS 6 & 4A
	1/0			12000	3 4		12000		4/0	
PEDESTALS 11 & 12	4/0	125A/2P	12000		5 6	12000		125A/2P	300	PEDESTALS 4B & 3
	4/0			12000	7 8		12000		300	
PEDESTALS 8 & 7	1/0	125A/2P	12000		9 10	12000		125A/2P	4/0	PEDESTALS 2 & 1
	1/0			12000	11 12		12000		4/0	
			36000			36000		PHASE A		72000
				36000			36000	PHASE B		72000

1 PANEL A SCHEDULE
SCALE: NONE

PANEL DESIGNATION: B										
VOLTAGE: 240 1PHASE 3WIRE	PANEL LOCATION: INNER LOOP					TOTAL VOLTAMPS THIS PANEL				108000
MAINS: 400 A MLO	MOUNTING: SURFACE		PANEL SPACES: 24			TOTAL CONNECTED LOAD (AMPS)				450
			CONNECTED LOAD		CKT.	CONNECTED LOAD				
CIRCUIT DESIGNATION	WIRE	TRIP	A	B	NO.	A	B	TRIP	WIRE	CIRCUIT DESIGNATION
PEDESTALS 16 & 15	1/0	125A/2P	12000		1 2	12000		125A/2P	4/0	PEDESTALS 19 & 20
	1/0			12000	3 4		12000		4/0	
PEDESTALS 14 & 13	3/0	125A/2P	12000		5 6	6000		75A/2P	3/0	PEDESTAL 21
	3/0			12000	7 8		6000		3/0	
PEDESTALS 17 & 18	2/0	125A/2P	12000		9 10					BLANK
	2/0			12000	11 12					BLANK
			36000			18000		PHASE A		54000
				36000			18000	PHASE B		54000

2 PANEL B SCHEDULE
SCALE: NONE

NOTES

(N) INDICATES KEYED NOTES

1. ALL NEW ELECTRICAL PANELS ARE TO HAVE NEW PANEL SCHEDULES. EACH SCHEDULE SHALL BE TYPED OUT AND PLACED IN PANEL.
2. A GROUND WIRE SHALL BE INSTALLED TO ALL SITE PEDESTALS.
3. INSTALL SQD NQ30L4C INTERIOR WITH A MH50WP WEATHER PROOF BOX OR EQUIVALENT. 400A MLO, CU BUS, 120/240V, 1ø3W, NEMA 3R 30 SPACE WITH QOB2125VH BOLT ON BRANCH BREAKERS. SUPPLY WITH THE NUMBER OF BRANCH BREAKERS SHOWN IN THE PANEL SCHEDULES BELOW. ALL BREAKERS SHALL HAVE A RATING OF 22KA AIC OR LARGER. BASIS OF DESIGN IS SQD, SEE SPECIFICATION SECTION 262416 PANELBOARDS, FOR OTHER MANUFACTURES.
4. CIRCUIT IS TO BE EXTENDED FROM PANEL IN APPROPRIATELY SIZED CONDUIT TO 24" BELOW GRADE AND THEN TRANSITION TO DIRECT BURIAL. ALL WIRE SHALL BE COPPER, 90°c, 600V, AND RATED FOR DIRECT BURIAL.
5. THE FEEDER CONDUCTORS WERE SIZE TO PREVENT A VOLTAGE DROP FROM EXCEEDING 2% AT EACH PANEL OR A MAXIMUM OF 5% VOLTAGE DROP AT THE FURTHEST PEDESTAL OUTLET. A DEMAND FACTOR OF 65% WAS APPLIED PER NEC TABLE 551.73(A).

STATE OF MISSOURI
MICHAEL L. PARSON,
GOVERNOR

STATE OF MISSOURI
JAMES L. DOVE
NUMBER
PE-2002016644
PROFESSIONAL ENGINEER
08-15-22

PROFESSIONAL SEAL

Midwest Engineering & Design
3100 Brown Station Rd. Suite C
Columbia, MO. 65202
(573) 875-0045 Phone
(573) 875-0046 FAX
WWW.MOENGINEERING.COM
Midwest Engineering & Design
Missouri State Certificate of Authority #2010032467

OFFICE OF ADMINISTRATION
DIVISION OF FACILITIES MANAGEMENT,
DESIGN AND CONSTRUCTION

DEPARTMENT OF NATURAL RESOURCES - PARKS & HISTORIC PRESERVATION

ELECTRIFICATION IMPROVEMENT

HARRY S TRUMAN STATE PARK
DEVIL'S BACKBONE CAMPGROUND
28761 STATE PARK RD. WEST
WARSAW, MISSOURI 65355

PROJECT # X2107-01
SITE# 5604
ASSET# 7815604032

REVISION:
DATE:
REVISION:
DATE:
REVISION:
DATE:
ISSUE DATE: 08/15/2022

CAD DWG FILE: HSTSP-e.dwg
DRAWN BY: MDS
CHECKED BY: JLD
DESIGNED BY: JLD

SHEET TITLE:
ELECTRICAL RISER AND PANEL SCHEDULES

SHEET NUMBER:
E-601

5 OF 5 SHEETS
08/15/2022