Bennett Spring State Park
Water Distribution System & Lagoon Pump Station Improvements
Lebanon, Missouri

CM Archer Group, P.C. dba:

ARCHER-ELGIN
ENGINEERING | SURVEYING | ARCHITECTURE

Corporate Authority:
CM Archer Group, P.C.: E: 2003023612-D, LS: 2004017577-D, A-2016017179
310 East 6th Street; Rolla, Missouri 65401 ■ Phone: 573-364-6362 Fax: 573-364-4782 ■ www.archer-elgin.com

OWNER & CONTINUING AUTHORITY:
STATE OF MISSOURI
MIKE KEHOE, GOVERNOR
MISSOURI STATE PARKS
MISSOURI DEPARTMENT OF NATURAL RESOURCES

PROJECT MANAGEMENT:
OFFICE OF ADMINISTRATION
DIVISION OF FACILITIES MANAGEMENT, DESIGN AND CONSTRUCTION

DESIGNER: Archer-Elgin

PROJECT NUMBER: X2506-01

SITE NUMBER: 4301
FACILITY NUMBER: 53775

SHEET INDEX:

G-001	COVER SHEET
W-001	OVERALL WATER PLAN AND KEY SHEET
W-100	WATER PLAN AND KEY SHEET BASE BID
W-101	ENLARGED WATER PLAN BASE BID
W-102	ENLARGED WATER PLAN BASE BID
W-103	ENLARGED WATER PLAN BASE BID
W-104	ENLARGED WATER PLAN BASE BID
W-105	ENLARGED WATER PLAN BASE BID
W-200	WATER PLAN AND KEY SHEET ALTERNATE 1
W-201	ENLARGED WATER PLAN ALTERNATE 1
W-202	ENLARGED WATER PLAN ALTERNATE 1
W-203	ENLARGED WATER PLAN ALTERNATE 1
W-300	WATER PLAN AND KEY SHEET ALTERNATE 2
W-301	ENLARGED WATER PLAN ALTERNATE 2
W-302	ENLARGED WATER PLAN ALTERNATE 2
W-401	LAGOON PUMP IMPROVEMENT PLAN BASE BID
W-601	CIVIL DETAILS
W-602	CIVIL DETAILS

STATE OF MISSOURI
JEFFERY A. MEDOWS
NUMBER E-29477
PROFESSIONAL ENGINEER
12/19/25
Jeffery A. Medows, P.E. 29477

SHEET NUMBER:

G-001

1 OF 18 SHEETS
March 19, 2026

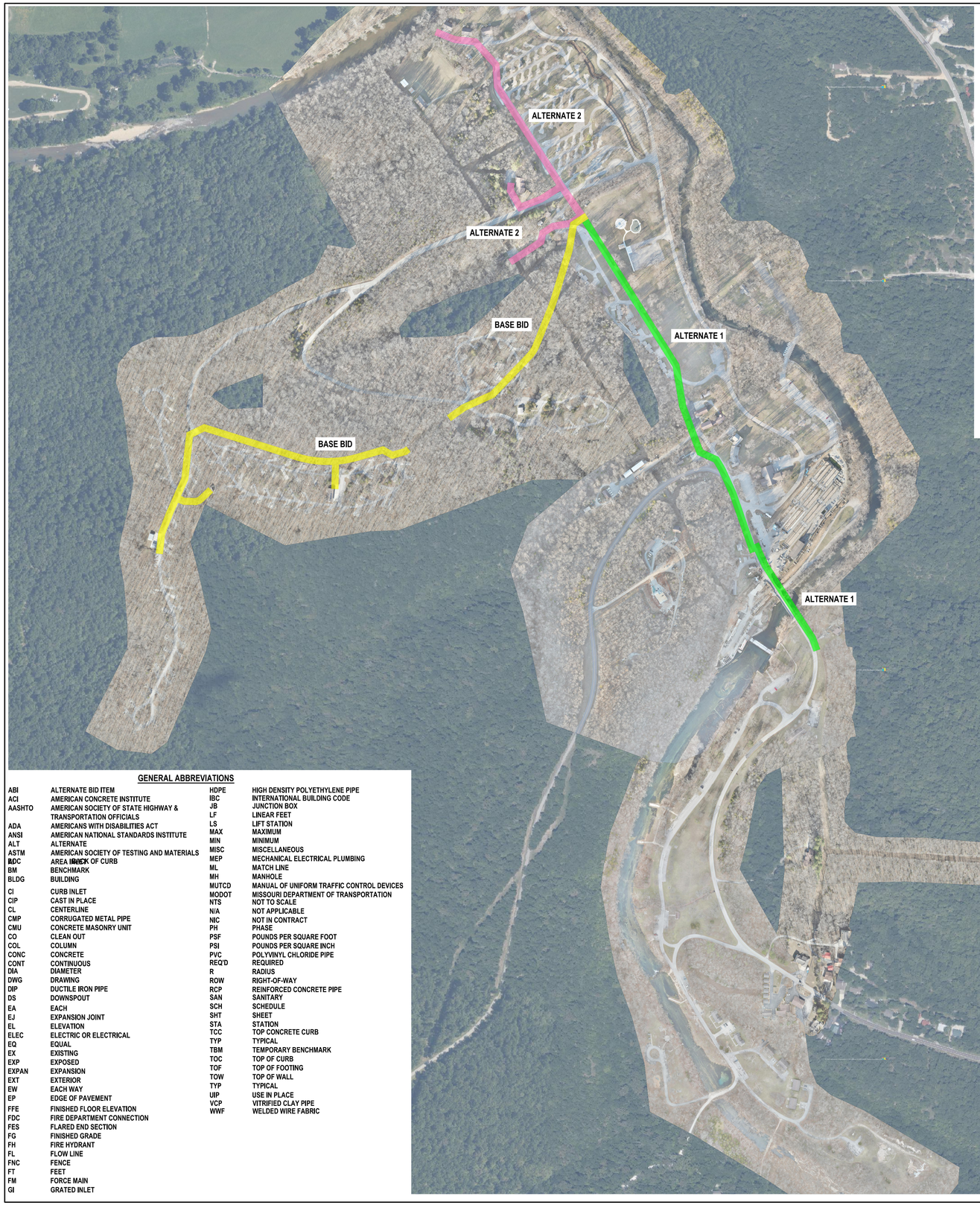

WATER UTILITY NOTES:

1. ALL EXISTING UTILITIES LOCATIONS SHOWN ON THE PLANS ARE TO BE CONSIDERED APPROXIMATE. THE CONTRACTOR SHALL MAKE ALL REASONABLE EFFORTS TO LOCATE ALL EXISTING UTILITIES IMPACTED BY CONSTRUCTION PRIOR TO THE COMMENCEMENT OF ANY CONSTRUCTION ACTIVITY. ENGINEER IS TO BE NOTIFIED IMMEDIATELY IF ANY DISCREPANCIES ARE DISCOVERED AT ANYTIME THROUGHOUT THE PROJECT, REGARDING THE LOCATION AND DISPOSITION OF THE EXISTING UTILITIES. THE CONTRACTOR SHALL LIMIT ADJUSTMENTS OF PROPOSED ALIGNMENTS UNLESS FORMAL APPROVAL IS PROVIDED. CHANGES TO CONTRACT DOCUMENTS MUST BE FORMALLY APPROVED PRIOR TO THE COMMENCEMENT OF CONSTRUCTION.
2. COORDINATION IN WRITING IS REQUIRED FOR ALL CONNECTIONS TO, ABANDONMENT OF, AND / OR ADJUSTMENT TO EXISTING UTILITY WITH THE APPROPRIATE UTILITY OWNER. WRITTEN NOTICE AND WRITTEN APPROVAL WITH A MINIMUM OF 72 HOURS PRIOR TO THE COMMENCEMENT OF WORK IS REQUIRED.
3. ALL WATERLINES SHALL HAVE A MINIMUM OF 42" INCHES OF COVER BELOW FINISH GRADE, UNLESS OTHERWISE INDICATED ON PLANS.
4. PROVIDE CONNECTIONS TO ALL EXISTING WATER FACILITIES MAINTAINED IN PLACE THROUGH THE PROJECT. CONNECTIONS NOT EXPLICITLY SHOWN ON THESE PLANS SHALL BE CONSIDERED INCIDENTAL TO THE SCOPE AND INCLUDED IN THE PROJECT.
5. PROVIDE ALL WATERLINE TEES, VALVES, BENDS, TAPPING SLEEVES, YARD HYDRANTS, CONNECTIONS TO EXISTING APPURTENANCES ETC. NECESSARY TO CONSTRUCT THE WATERLINE AS SHOWN ON THESE PLANS AND TO ENSURE OPERATION OF EXISTING MAINTAINED CONNECTIONS ANCILLARY TO THE WATERMAIN.
6. WHEN WATER AND SEWER LINES RUN PARALLEL THERE IS TO BE A 10 FOOT HORIZONTAL SEPARATION MEASURED EDGE TO EDGE. WHEN WATER AND SEWER LINES CROSS THERE IS TO BE AN 18 INCH SEPARATION VERTICALLY MEASURED EDGE TO EDGE. THIS SHALL BE THE CASE WHERE THE WATERLINE IS ABOVE OR BELOW THE SEWER. AT CROSSING THE FULL LENGTH OF WATER PIPE SHALL BE LOCATED SO BOTH JOINTS WILL BE AS FAR FROM THE SEWER AS POSSIBLE BUT IN NO CASE LESS THAN 10 FEET. IF EITHER SEPARATION IS NOT PRACTICAL CONTACT ENGINEER TO DETERMINE IF A DEVIATION IS ACCEPTABLE.
7. SEQUENCE CONSTRUCTION ACTIVITIES TO MAINTAIN TO THE MAXIMUM EXTENTS POSSIBLE, POTABLE WATER SERVICES FOR ALL FACILITIES. PROPOSED WATERLINE SHALL NOT BE PLACED INTO SERVICE UNTIL: CONSTRUCTION IS COMPLETE; ACCEPTANCE TESTING HAS BEEN PERFORMED; THE WATERLINE HAS BEEN DISINFECTED; WRITTEN AUTHORIZATION HAS BEEN PROVIDED BY ENGINEER AND OWNER.
8. ALL FITTINGS ARE TO BE FULLY RESTRAINED.
9. PROVIDE THRUST BLOCKING IN ACCORDANCE WITH THRUST BLOCK INSTALLATION DETAIL ON SHEET W-501.
10. CONTRACTOR SHALL CAP AND ABANDON IN-PLACE EXISTING WATER MAIN AFTER NEW WATER MAIN IS PLACED INTO SERVICE.
11. DO NOT OBSTRUCT ROADWAYS DURING CONSTRUCTION OF IMPROVEMENTS. ROADWAYS ARE TO REMAIN OPEN AT ALL TIMES.
12. ANY PIPE LAID AT A SLOPE GREATER THAN 10% SHALL HAVE RESTRAINED JOINTS.
13. MINIMUM COLD BEND RADIUS SHALL BE IN ACCORDANCE WITH MANUFACTURER SPECIFICATIONS.
14. HDPE PIPE SHALL BE CONNECTED TO MECHANICAL JOINT (MJ) VALVES AND FITTINGS WITH AN APPROVED HDPE MJ ADAPTER (SEE DETAIL). HDPE FITTINGS, WHEN USED SHALL BE FROM AN APPROVED MANUFACTURER. MJ ADAPTERS OR HDPE FITTINGS SHALL NOT BE INSTALLED WITHIN A BENT SECTION OF HDPE PIPE. HDPE BENDS SHALL BE 11.25, 22.5 OR 45 DEGREE BENDS. FIELD FABRICATION OR MODIFICATION OF HDPE FITTINGS IS PROHIBITED. MECHANICAL JOINT CONNECTIONS OF HDPE PIPE TO DUCTILE IRON OR THERE DISSIMILAR MATERIAL FITTINGS OR VALVE SHALL USE HDPE MECHANICAL JOINT (MJ) ADAPTERS.
15. CONCRETE IN-LINE ANCHORS SHALL BE AT LOCATIONS WITHIN 10 FEET OF WHERE A HDPE PIPE TERMINATES TO UNRESTRAINED PIPE AND SHALL BE INSTALLED IN ACCORDANCE WITH DETAIL: "CONCRETE IN-LINE ANCHOR FOR HDPE PIPE". CONCRETE IN-LINE ANCHORS ARE NOT NEEDED WHEN CONNECTING TO RESTRAINED PIPE.
16. PROVIDE ELECTROFUSION WATER SERVICE CONNECTIONS UNLESS NOTED OTHERWISE OR APPROVED BY THE OWNER AND ENGINEER.

STANDARD LEGEND

- EX 1' CONTOUR
- EX 5' CONTOUR
- EX UNKNOWN UTILITY
- EX OVERHEAD ELECTRIC
- EX UNDERGROUND ELECTRIC
- EX UNDERGROUND TELEPHONE
- EX UNDERGROUND CABLE
- EX SANITARY SEWER
- EX FORCE MAIN
- EX WATER LINE
- EX NATURAL GAS
- EX STORM PIPE
- EX BARBED WIRE FENCE
- EX CHAIN LINK FENCE
- EX WOOD FENCE
- EX GUARD RAIL
- EX BUILDING LINE
- ABANDONED UNDERGROUND UTILITY
- EX. WATER MAIN
- EX. DUCTBANK
- EX. COMMUNICATION
- BASE BID
- ALTERNATE 1
- ALTERNATE 2
- NEW WATER LINE
- NEW PRESSURE REDUCING VALVE
- NEW AIR RELIEF VALVE
- NEW CHLORINE INJECTION PORT
- NEW THRUST BLOCK
- NEW FLUSH HYDRANT
- NEW WATER GATE VALVE
- NEW YARD HYDRANT
- EX. FIRE HYDRANT
- EX. WATER VALVE
- EX. SANITARY MANHOLE
- POWER POLE & GUY WIRE
- LIGHT POLE
- TELEPHONE MANHOLE
- TELEPHONE PEDESTAL
- CABLE MARKER
- CABLE TV PEDESTAL
- ELECTRIC METER
- ELECTRIC BOX
- ELECTRICAL MANHOLE
- TRAFFIC STANDARD
- WATER METER
- WATER WELL
- WATER MANHOLE
- WATER SPRINKLER
- IRRIGATION CONTROL VALVE
- STORM SEWER MANHOLE
- CLEANOUT
- SIGN
- GAS METER
- GAS VALVE
- MAILBOX
- BOLLARD
- EX CONCRETE PAVING
- EX ASPHALT PAVING
- EX GRANULAR PAVING

GENERAL ABBREVIATIONS

ABI	ALTERNATE BID ITEM
ACI	AMERICAN CONCRETE INSTITUTE
AASHTO	AMERICAN SOCIETY OF STATE HIGHWAY & TRANSPORTATION OFFICIALS
ADA	AMERICANS WITH DISABILITIES ACT
ANSI	AMERICAN NATIONAL STANDARDS INSTITUTE
ALT	ALTERNATE
ASTM	AMERICAN SOCIETY OF TESTING AND MATERIALS
BOC	AREA BACK OF CURB
BM	BENCHMARK
BLDG	BUILDING
CI	CURB INLET
CIP	CAST IN PLACE
CL	CENTERLINE
CMP	CORRUGATED METAL PIPE
CMU	CONCRETE MASONRY UNIT
CO	CLEAN OUT
COL	COLUMN
CONC	CONCRETE
CONT	CONTINUOUS
DIA	DIAMETER
DWG	DRAWING
DIP	DUCTILE IRON PIPE
DS	DOWNSPOUT
EA	EACH
EJ	EXPANSION JOINT
EL	ELEVATION
ELEC	ELECTRIC OR ELECTRICAL
EQ	EQUAL
EX	EXISTING
EXP	EXPOSED
EXPAN	EXPANSION
EXT	EXTERIOR
EW	EACH WAY
EP	EDGE OF PAVEMENT
FFE	FINISHED FLOOR ELEVATION
FDC	FIRE DEPARTMENT CONNECTION
FES	FLARED END SECTION
FG	FINISHED GRADE
FH	FIRE HYDRANT
FL	FLOW LINE
FNC	FENCE
FT	FEET
FM	FORCE MAIN
GI	GRATED INLET
HDPE	HIGH DENSITY POLYETHYLENE PIPE
IBC	INTERNATIONAL BUILDING CODE
JB	JUNCTION BOX
LF	LINEAR FEET
LS	LIFT STATION
MAX	MAXIMUM
MIN	MINIMUM
MISC	MISCELLANEOUS
MEP	MECHANICAL ELECTRICAL PLUMBING
ML	MATCH LINE
MH	MANHOLE
MUTCD	MANUAL OF UNIFORM TRAFFIC CONTROL DEVICES
MODOT	MISSOURI DEPARTMENT OF TRANSPORTATION
NTS	NOT TO SCALE
N/A	NOT APPLICABLE
NIC	NOT IN CONTRACT
PH	PHASE
PSF	POUNDS PER SQUARE FOOT
PSI	POUNDS PER SQUARE INCH
PVC	POLYVINYL CHLORIDE PIPE
REQ'D	REQUIRED
R	RADIUS
ROW	RIGHT-OF-WAY
RCP	REINFORCED CONCRETE PIPE
SAN	SANITARY
SCH	SCHEDULE
SHT	SHEET
STA	STATION
TCC	TOP CONCRETE CURB
TYP	TYPICAL
TBM	TEMPORARY BENCHMARK
TOC	TOP OF CURB
TOF	TOP OF FOOTING
TOW	TOP OF WALL
TYP	TYPICAL
UIP	USE IN PLACE
VCP	VITRIFIED CLAY PIPE
WWF	WELDED WIRE FABRIC

STATE OF MISSOURI
MIKE KEHOE, GOVERNOR

STATE OF MISSOURI
JEFFERY A. MEDOWS
NUMBER E-29477
REGISTERED PROFESSIONAL ENGINEER
09-19-25
Jeffery A. Medows, P.E. 29477

CM Archer Group, P.C. dba:
ARCHER-ELGIN
ENGINEERING | SURVEYING | ARCHITECTURE
Corporate Authority:
CM Archer Group, P.C.; E: 2003023612-0, LS: 2004017577-D, A-2016017179
310 East 6th Street, Rolla, Missouri 65401 ■ Phone: 573-364-4582 Fax: 573-364-4762 ■ www.archer-elgin.com

OFFICE OF ADMINISTRATION
DIVISION OF FACILITIES MANAGEMENT, DESIGN AND CONSTRUCTION

STATE OF MISSOURI
DIVISION OF STATE PARKS
MISSOURI DEPARTMENT OF NATURAL RESOURCES

BENNETT SPRING STATE PARK
WATER DISTRIBUTION SYSTEM & LAGOON PUMP STATION IMPROVEMENTS

LEBANON, MISSOURI

PROJECT # X2506.01
SITE # 4301
FACILITY # 53775

REVISION:
DATE:
REVISION:
DATE:
REVISION:
DATE:
ISSUE DATE: 3-19-26

CAD DWG FILE: W-001.DWG
DRAWN BY: JSM
CHECKED BY: JAM
DESIGNED BY: CCH

SHEET TITLE:
OVERALL WATER PLAN AND KEY SHEET

SHEET NUMBER:
W-001

2 OF 18 SHEETS
3-19-26



STATE OF MISSOURI
MIKE KEHOE, GOVERNOR

STATE OF MISSOURI
JEFFERY A. MEDOWS
NUMBER E-29477
REGISTERED PROFESSIONAL ENGINEER
03/19/26

Jeffery A. Medows, P.E. 29477

CM Archer Group, P.C. dBa:

ARCHER-ELGIN
ENGINEERING | SURVEYING | ARCHITECTURE

Corporate Authority:
CM Archer Group, P.C.; E: 2003023612-0; LS: 2004017577-D, A-2016017179
310 East 6th Street, Rolla, Missouri 65401 ● Phone: 573-364-4582 Fax: 573-364-4762 ● www.archer-elgin.com

OFFICE OF ADMINISTRATION
DIVISION OF FACILITIES MANAGEMENT,
DESIGN AND CONSTRUCTION

STATE OF MISSOURI
DIVISION OF STATE PARKS
MISSOURI DEPARTMENT OF NATURAL RESOURCES

BENNETT SPRING STATE PARK WATER DISTRIBUTION SYSTEM & LAGOON PUMP STATION IMPROVEMENTS

LEBANON, MISSOURI

PROJECT # X2506.01
SITE # 4301
FACILITY # 53775

REVISION:
DATE:
REVISION:
DATE:
REVISION:
DATE:
ISSUE DATE: 3-19-26

CAD DWG FILE: W-100.DWG
DRAWN BY: JSM
CHECKED BY: JAM
DESIGNED BY: CCH

SHEET TITLE:

WATER PLAN AND KEY SHEET BASE BID

SHEET NUMBER:

W-100

3 OF 18 SHEETS
3-19-26

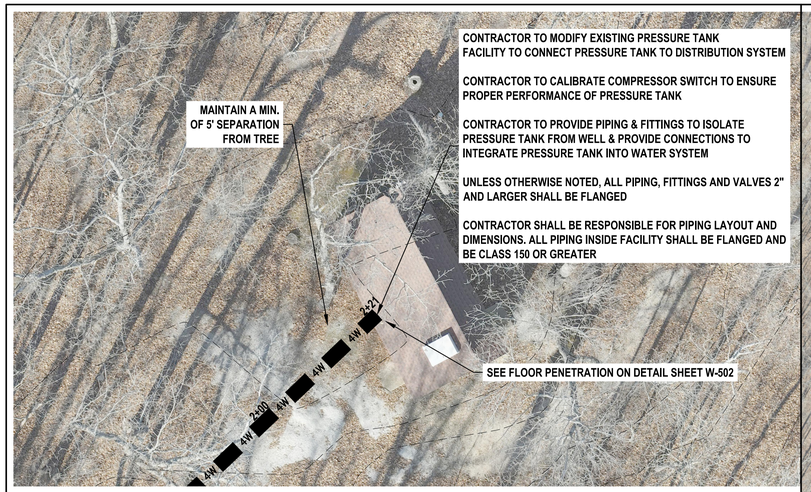

ENLARGED PLAN
SCALE: 1" = 10'



STATE OF MISSOURI
MIKE KEHOE, GOVERNOR

STATE OF MISSOURI
JEFFERY A. MEDOWS
NUMBER E-29477
REGISTERED PROFESSIONAL ENGINEER
07/31/26
Jeffery A. Medows, P.E. 29477

CM Archer Group, P.C. dba:
ARCHER-ELGIN
ENGINEERING | SURVEYING | ARCHITECTURE
Corporate Authority:
CM Archer Group, P.C.; E: 2003023612-0; LS: 2004017577-D, A-2016017179
310 East 6th Street, Rolla, Missouri 65401 ● Phone: 573-364-4582 Fax: 573-364-4762 ● www.archer-elgin.com

OFFICE OF ADMINISTRATION
DIVISION OF FACILITIES MANAGEMENT, DESIGN AND CONSTRUCTION

STATE OF MISSOURI
DIVISION OF STATE PARKS
MISSOURI DEPARTMENT OF NATURAL RESOURCES

BENNETT SPRING STATE PARK
WATER DISTRIBUTION SYSTEM & LAGOON PUMP STATION IMPROVEMENTS

LEBANON, MISSOURI

PROJECT # X2506.01
SITE # 4301
FACILITY # 53775

REVISION:
DATE:
REVISION:
DATE:
REVISION:
DATE:
ISSUE DATE: 3-19-26

CAD DWG FILE: W-101.DWG
DRAWN BY: JSM
CHECKED BY: CCH
DESIGNED BY: CCH

SHEET TITLE:
ENLARGED WATER PLAN BASE BID

SHEET NUMBER:
W-101
4 OF 18 SHEETS
3-19-26

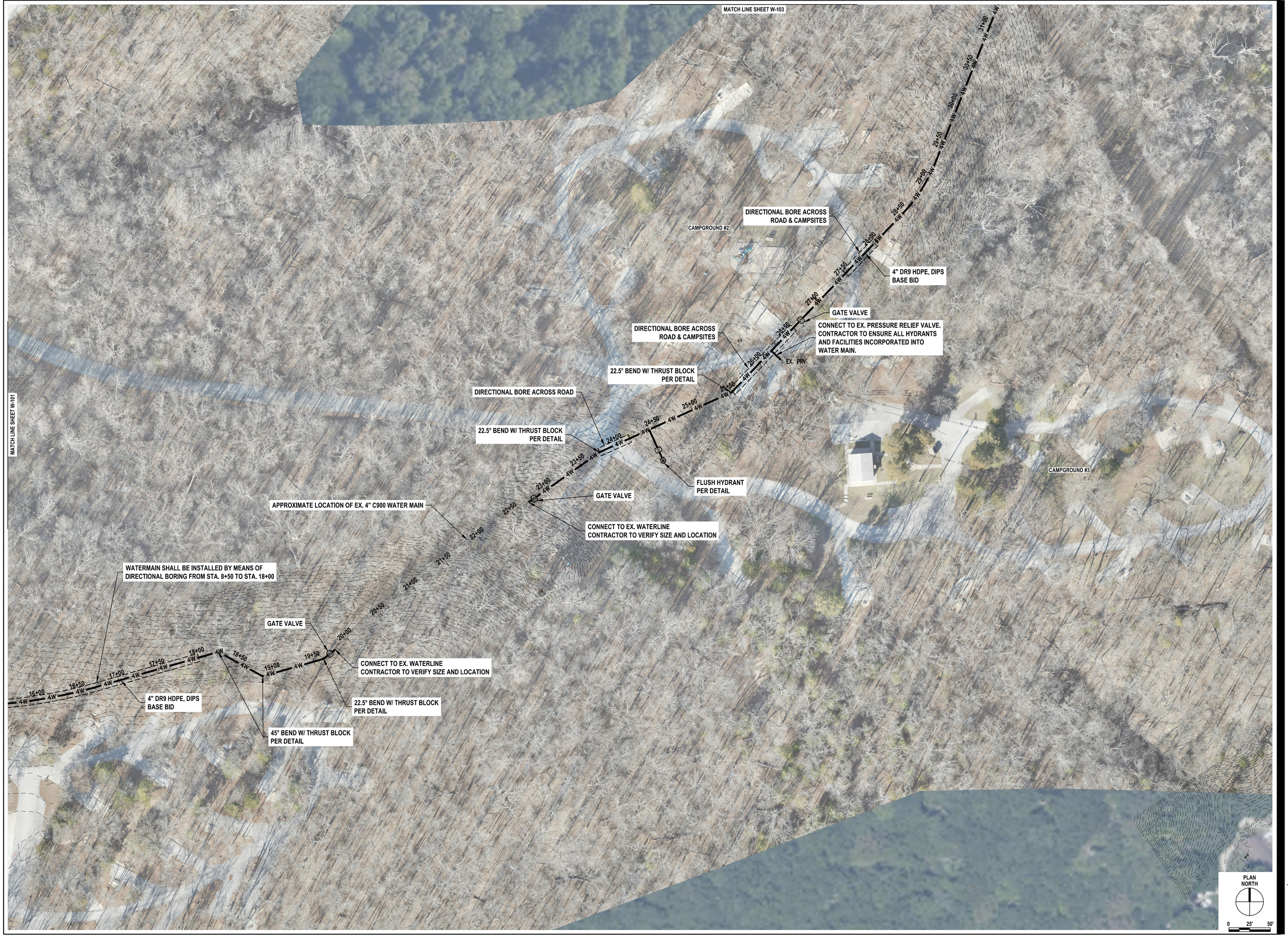

STATE OF MISSOURI
MIKE KEHOE, GOVERNOR

STATE OF MISSOURI
JEFFERY A. MEDOWS
NUMBER 29477
REGISTERED PROFESSIONAL ENGINEER
07/31/26

Jeffery A. Medows, P.E. 29477

CM Archer Group, P.C. dba:

ARCHER-ELGIN
ENGINEERING | SURVEYING | ARCHITECTURE

Corporate Authority:
CM Archer Group, P.C.; E: 2003023612-D, LS: 2004017577-D, A-2016017179
310 East 6th Street, Rolla, Missouri 65401 ■ Phone: 573-364-4582 Fax: 573-364-4762 ■ www.archer-elgin.com

OFFICE OF ADMINISTRATION
DIVISION OF FACILITIES MANAGEMENT, DESIGN AND CONSTRUCTION

STATE OF MISSOURI
DIVISION OF STATE PARKS
MISSOURI DEPARTMENT OF NATURAL RESOURCES

BENNETT SPRING STATE PARK
WATER DISTRIBUTION SYSTEM & LAGOON PUMP STATION IMPROVEMENTS

LEBANON, MISSOURI

PROJECT # X2506.01
SITE # 4301
FACILITY # 53775

REVISION:
DATE:
REVISION:
DATE:
REVISION:
DATE:

ISSUE DATE: 3-19-26

CAD DWG FILE: W-102.DWG
DRAWN BY: JSM
CHECKED BY: JAM
DESIGNED BY: CCH

SHEET TITLE:

ENLARGED WATER PLAN BASE BID

SHEET NUMBER:

W-102

5 OF 18 SHEETS
3-19-26



ENLARGED PLAN
SCALE: 1" = 10'

STATE OF MISSOURI
MIKE KEHOE,
GOVERNOR

STATE OF MISSOURI
JEFFERY A. MEDOWS
NUMBER E-29477
REGISTERED PROFESSIONAL ENGINEER
Jeffery A. Medows, P.E. 29477

CM Archer Group, P.C. dba:
ARCHER-ELGIN
ENGINEERING | SURVEYING | ARCHITECTURE
Corporate Authority:
CM Archer Group, P.C.; E: 2003023612-0, LS: 2004017577-D, A-2016017179
310 East 6th Street, Rolla, Missouri 65401 ■ Phone: 573-364-4582 Fax: 573-364-4762 ■ www.archer-elgin.com

OFFICE OF ADMINISTRATION
DIVISION OF FACILITIES MANAGEMENT,
DESIGN AND CONSTRUCTION

STATE OF MISSOURI
DIVISION OF STATE PARKS
MISSOURI DEPARTMENT OF NATURAL RESOURCES

BENNETT SPRING STATE PARK
WATER DISTRIBUTION SYSTEM
& LAGOON PUMP STATION
IMPROVEMENTS

LEBANON, MISSOURI

PROJECT # X2506.01
SITE # 4301
FACILITY # 53775

REVISION:
DATE:
REVISION:
DATE:
REVISION:
DATE:
REVISION:
DATE:
ISSUE DATE: 3-19-26

CAD DWG FILE: W-103.DWG
DRAWN BY: JSM
CHECKED BY: JAM
DESIGNED BY: CCH

SHEET TITLE:
ENLARGED
WATER PLAN
BASE BID

SHEET NUMBER:
W-103

6 OF 18 SHEETS
3-19-26

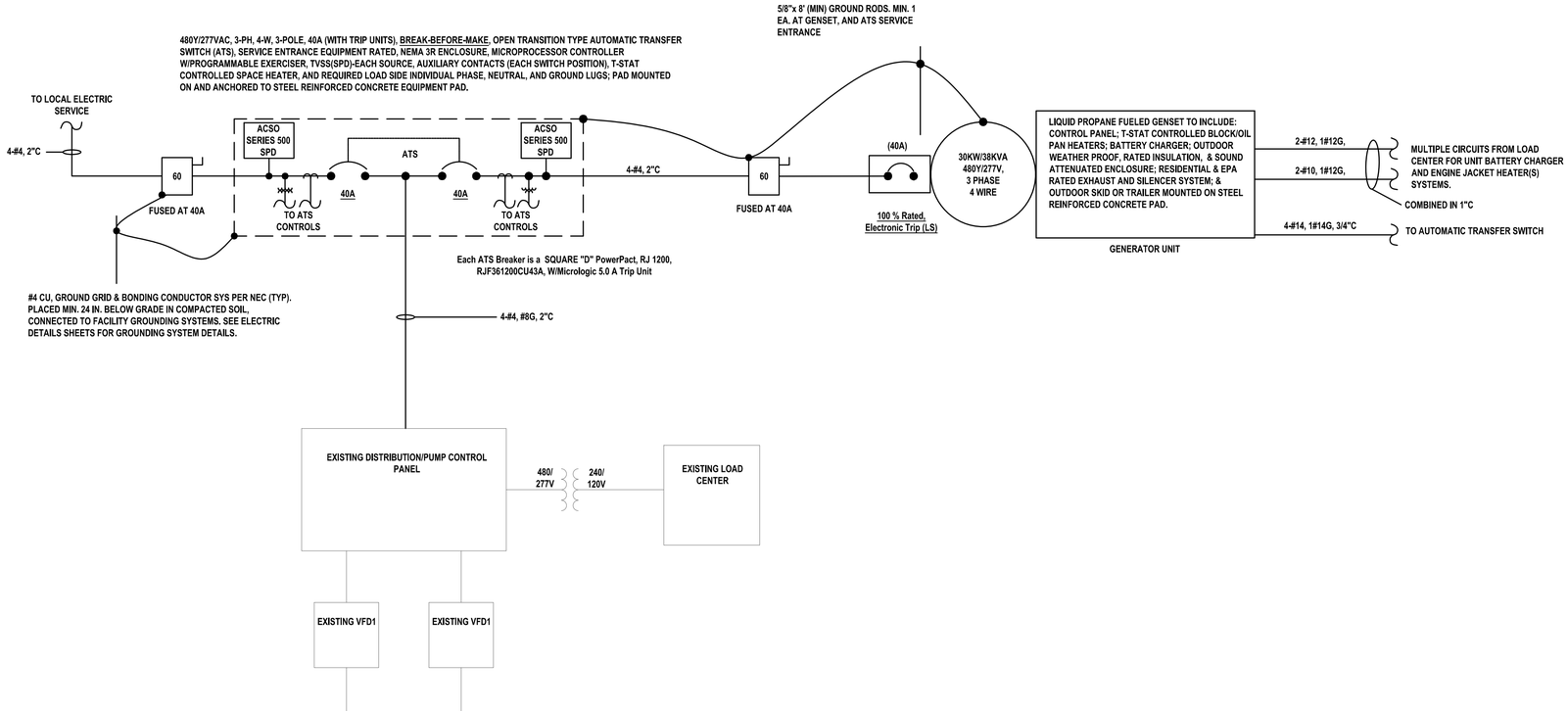

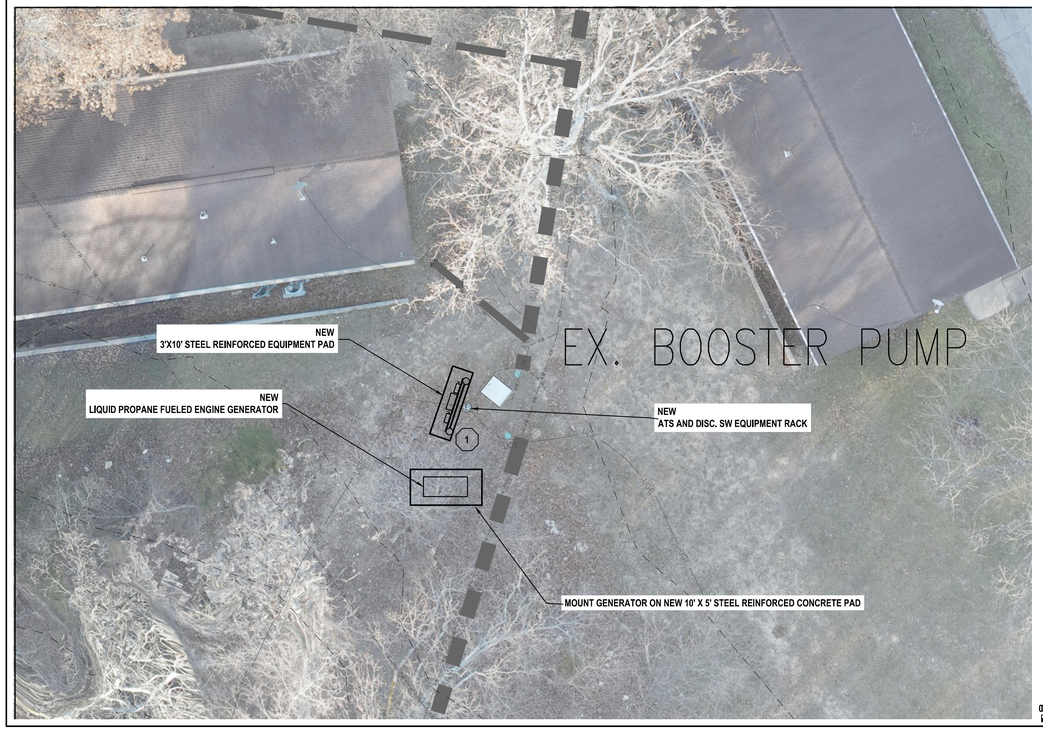

1 REUSE EXISTING 40A DISCONNECT SWITCH FOR LINE SIDE (SOURCE 1 POWER)

CONTRACTOR SHALL FIELD INSPECT AND DOCUMENT EXISTING ELECTRIC CONDITIONS, INCLUDE, BUT NOT LIMITED TO: EQUIPMENT & COMPONENTS TYPES, SIZES, & RATINGS; EXISTING FEEDER'S AND BRANCH CIRCUIT'S CONDUCTORS, AND CONDUITS LOCATIONS, ROUTING, AND SIZES; ENCLOSURES; AND SPECIFIC LOADS.

CONTRACTOR SHALL SUBMIT EXISTING ELECTRIC CONDITION'S FIELD INSPECTION DOCUMENTATION TO OWNER AND ENGINEER FOR REVIEW PRIOR TO ANY PROJECT ELECTRICAL WORK PROCEEDING.

CONTRACTOR SHALL DEVELOP ELECTRIC DISTRIBUTION SYSTEM MODIFICATIONS PLAN AND COORDINATE AND SCHEDULE WITH LOCAL OWNER FACILITY OPERATIONS STAFF AND ENGINEER, TO INCLUDE, BUT NOT LIMITED TO: PROJECT NEW & EXISTING EQUIPMENT MODIFICATIONS INSTALLATION SPECIFICATIONS, REQUIREMENTS, & SCHEDULING; ANY EXISTING ELECTRIC DISTRIBUTION EQUIPMENT & CIRCUITS DISCONNECTION, REMOVAL, AND DEMOLITION; AND ANY REQUIRED EXISTING LOADS' TRANSFERS TO NEW ELECTRIC DISTRIBUTION EQUIPMENT (FROM EXISTING/OLD) REQUIREMENTS, SCHEDULING, TESTING, AND RETURNING TO SERVICE.

CONTRACTOR SHALL SUBMIT PROPOSED WRITTEN ELECTRIC DISTRIBUTION MODIFICATIONS PLAN AND SCHEDULE DOCUMENTATION TO OWNER, AND PROJECT ENGINEER FOR REVIEW PRIOR TO ANY PROJECT EXISTING ELECTRIC SYSTEM DEMOLITION WORK PROCEEDS.

ALL ELECTRIC & CONTROLS PANELS/ENCLOSURES, CIRCUITS, AND CONDUIT EQUIPMENT & MATERIALS, THAT ARE REQUIRED TO BE REMOVED, SHALL BE TAKEN OUT OF SERVICE, DISCONNECTED, REMOVED, AND TURNED OVER TO OWNER, AS DIRECTED BY THE OWNER AND PER CONTRACT DOCUMENTS.

ALL EXISTING OPERATIONAL PROCESS EQUIPMENT SYSTEM OPERATIONS SHALL REMAIN IN SERVICE UNTIL NEW PROCESS HAVE BEEN INSTALLED, TESTED, PLACED IN SERVICE, AND ACCEPTED BY THE OWNER.

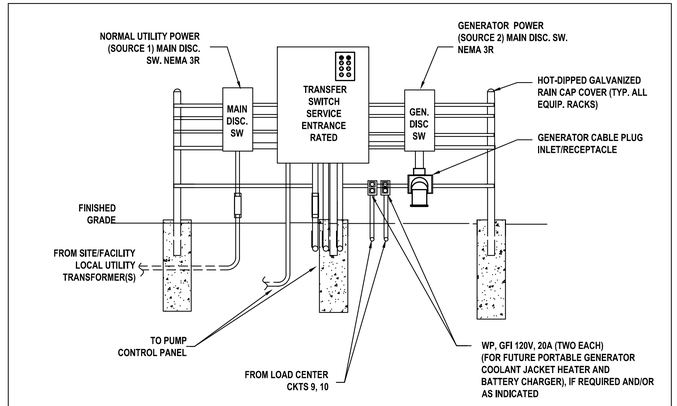

ELECTRICAL EQUIPMENT RACK EXAMPLE ARRANGEMENT

NOT TO SCALE, NOT ALL CONDUITS INDICATED FOR CLARITY & SHOWN OUT OF ROTATION

CT/PT METERING ENCLOSURERS, NOT INDICATED, FOR CLARITY.

TYPICALLY, CT/PT CABINETS INSTALLED ON BACK SIDE OF EQUIPMENT RACK

NOTES

1. SEE SPECIFICATIONS FOR ADDITIONAL EQUIPMENT INFORMATION & GROUNDING REQUIREMENTS. ANY ELECTRIC SERVICE METERING ENCLOSURES AND/OR EQUIPMENT SHALL BE INSTALLED, AS DIRECTED, BY LOCAL ELECTRIC EQUIPMENT.
2. PROPOSED EQUIPMENT RACK LAYOUT AND DETAILS TO BE PER NEC AND SUBMITTED TO OWNER BY CONTRACTOR FOR PRIOR TO INSTALLATION.
3. ACTUAL EQUIPMENT PANEL MOUNTING REQUIREMENTS TO BE DETERMINED BASED ON APPROVED EQUIPMENT TO BE SUPPLIED.
4. ELECTRICAL EQUIPMENT RACKS SHALL BE LOCATED A MINIMUM OF 10' FROM NEAREST ROADWAY AND/OR PARKING AREA. ELECTRICAL EQUIPMENT RACK SHALL CONSIST OF THREE (3) (MIN.) HOT-DIPPED GALVANIZED, CAPPED, 4 " DIA. BY 8 ' LONG STEEL POSTS AND MINIMUM FOUR (4) 6 ' HOT DIPPED GALVANIZED OR STAINLESS STEEL RIGID SLOTTED STRUTS OR UNISTRUT. PLACE POLES IN 18 " DIA. BY 48" DEEP CONCRETE ENCASEMENT (SONOTUBE OR EQUAL), SPACE 4.5' (MAX) APART, AND WITH CONCRETE CROWN. SPACE HORIZONTAL STRUTS AS REQUIRED TO INSTALL AND SUPPORT ALL INDICATED ELECTRICAL EQUIPMENT. GROUND RACK TO SITE GROUNDING SYSTEM.
5. ALL EXPOSED CONDUIT SHALL BE RIGID STEEL CONDUIT, EXCEPT CONDUIT RISER EXPANSION COUPLINGS

STATE OF MISSOURI
MIKE KEHOE, GOVERNOR

STATE OF MISSOURI
TONY WELLNITZ
NUMBER
PE-2023000202
PROFESSIONAL ENGINEER
Tony Wellnitz, P.E. 2023000202

CM Archer Group, P.C. dba:
ARCHER-ELGIN
ENGINEERING | SURVEYING | ARCHITECTURE
Corporate Authority:
CM Archer Group, P.C.; E: 2003023612-D, LS: 2004017577-D, A-2016017179
310 East 6th Street, Rolla, Missouri 65401 ■ Phone: 573-364-4582 Fax: 573-364-4762 ■ www.archer-elgin.com

OFFICE OF ADMINISTRATION
DIVISION OF FACILITIES MANAGEMENT,
DESIGN AND CONSTRUCTION

STATE OF MISSOURI
DIVISION OF STATE PARKS
MISSOURI DEPARTMENT OF NATURAL RESOURCES

BENNETT SPRING STATE PARK
WATER DISTRIBUTION SYSTEM & LAGOON PUMP STATION IMPROVEMENTS

LEBANON, MISSOURI

PROJECT # X2506.01
SITE # 4301
FACILITY # 53775

REVISION:
DATE:
REVISION:
DATE:
REVISION:
DATE:
ISSUE DATE: 3-19-26

CAD DWG FILE: W-104.DWG
DRAWN BY: RQR
CHECKED BY: TLW
DESIGNED BY: RQR

SHEET TITLE:
ENLARGED WATER PLAN BASE BID

SHEET NUMBER:
W-104

7 OF 18 SHEETS
3-19-26



STATE OF MISSOURI
MIKE KEHOE, GOVERNOR

STATE OF MISSOURI
JEFFERY A. MEDOWS
NUMBER E-29477
REGISTERED PROFESSIONAL ENGINEER
07/31/26
Jeffery A. Medows, P.E. 29477

CM Archer Group, P.C. dba:
ARCHER-ELGIN
ENGINEERING | SURVEYING | ARCHITECTURE
Corporate Authority:
CM Archer Group, P.C.; E: 2003023912-0; LS: 2004017577-D, A-2016017179
310 East 6th Street, Rolla, Missouri 65401 ■ Phone: 573-364-4582 Fax: 573-364-4762 ■ www.archer-elgin.com

OFFICE OF ADMINISTRATION
DIVISION OF FACILITIES MANAGEMENT, DESIGN AND CONSTRUCTION

STATE OF MISSOURI
DIVISION OF STATE PARKS
MISSOURI DEPARTMENT OF NATURAL RESOURCES

BENNETT SPRING STATE PARK
WATER DISTRIBUTION SYSTEM & LAGOON PUMP STATION IMPROVEMENTS

LEBANON, MISSOURI

PROJECT # X2506.01
SITE # 4301
FACILITY # 53775

REVISION:
DATE:
REVISION:
DATE:
REVISION:
DATE:
ISSUE DATE: 3-19-26

CAD DWG FILE: W-105.DWG
DRAWN BY: JSM
CHECKED BY: JAM
DESIGNED BY: CCH

SHEET TITLE:
ENLARGED WATER PLAN BASE BID

SHEET NUMBER:
W-105

8 OF 18 SHEETS
3-19-26



STATE OF MISSOURI
MIKE KEHOE, GOVERNOR

STATE OF MISSOURI
JEFFERY A. MEDOWS
NUMBER E-29477
REGISTERED PROFESSIONAL ENGINEER
07/31/26

Jeffery A. Medows, P.E. 29477

CM Archer Group, P.C. dba:

ARCHER-ELGIN
ENGINEERING | SURVEYING | ARCHITECTURE

Corporate Authority:
CM Archer Group, P.C.; E: 2003023912-D; LS: 2004017577-D; A-2016017179
310 East 6th Street, Rolla, Missouri 65401 ● Phone: 573-364-4582 Fax: 573-364-4762 ● www.archer-elgin.com

OFFICE OF ADMINISTRATION
DIVISION OF FACILITIES MANAGEMENT, DESIGN AND CONSTRUCTION

STATE OF MISSOURI
DIVISION OF STATE PARKS
MISSOURI DEPARTMENT OF NATURAL RESOURCES

BENNETT SPRING STATE PARK
WATER DISTRIBUTION SYSTEM
& LAGOON PUMP STATION
IMPROVEMENTS

LEBANON, MISSOURI

PROJECT # X2506.01
SITE # 4301
FACILITY # 53775

REVISION:
DATE:
REVISION:
DATE:
REVISION:
DATE:
ISSUE DATE: 3-19-26

CAD DWG FILE: W-200.DWG
DRAWN BY: JSM
CHECKED BY: JAM
DESIGNED BY: CCH

SHEET TITLE:

WATER PLAN AND KEY SHEET ALTERNATE 1

SHEET NUMBER:

W-200

9 OF 18 SHEETS
3-19-26



STATE OF MISSOURI
MIKE KEHOE, GOVERNOR

STATE OF MISSOURI
JEFFERY A. MEDOWS
NUMBER E-29477
REGISTERED PROFESSIONAL ENGINEER
03/19/26

Jeffery A. Medows, P.E. 29477

CM Archer Group, P.C. dba:

ARCHER-ELGIN
ENGINEERING | SURVEYING | ARCHITECTURE

Corporate Authority:
CM Archer Group, P.C.; E: 2003023612-D; LS: 2004017577-D, A-2016017179
310 East 6th Street, Rolla, Missouri 65401 ■ Phone: 573-364-4582 Fax: 573-364-4582 ■ www.archer-elgin.com

OFFICE OF ADMINISTRATION
DIVISION OF FACILITIES MANAGEMENT, DESIGN AND CONSTRUCTION

STATE OF MISSOURI
DIVISION OF STATE PARKS
MISSOURI DEPARTMENT OF NATURAL RESOURCES

BENNETT SPRING STATE PARK
WATER DISTRIBUTION SYSTEM
& LAGOON PUMP STATION
IMPROVEMENTS

LEBANON, MISSOURI

PROJECT # X2506.01
SITE # 4301
FACILITY # 53775

REVISION:
DATE:
REVISION:
DATE:
REVISION:
DATE:
ISSUE DATE: 3-19-26

CAD DWG FILE: W-201.DWG
DRAWN BY: JSM
CHECKED BY: JAM
DESIGNED BY: CCH

SHEET TITLE:

ENLARGED WATER PLAN ALTERNATE 1

SHEET NUMBER:

W-201

10 OF 28 SHEETS
3-19-26

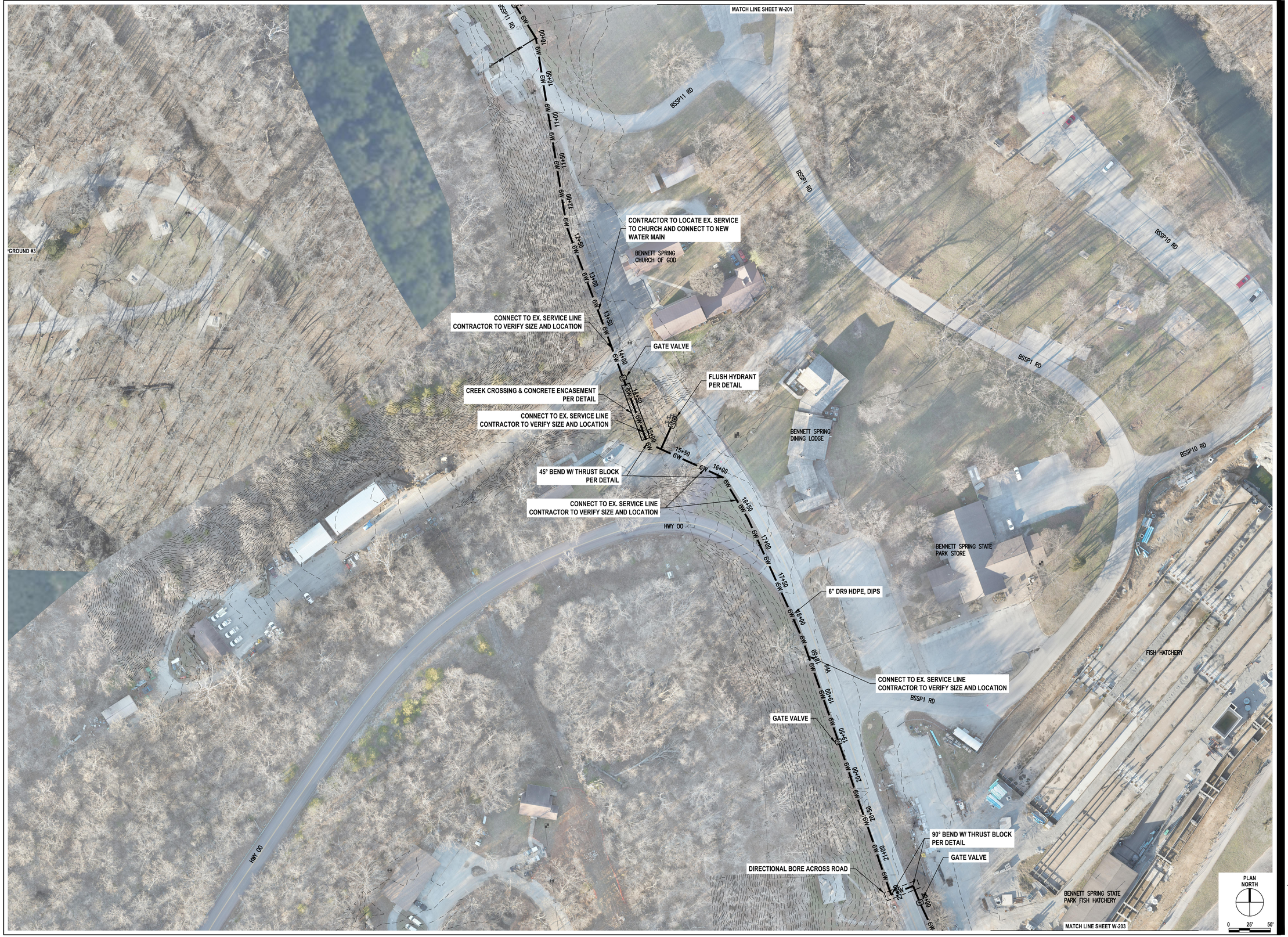

STATE OF MISSOURI
MIKE KEHOE, GOVERNOR

STATE OF MISSOURI
JEFFERY A. MEDOWS
NUMBER E-29477
REGISTERED PROFESSIONAL ENGINEER
03/19/26

Jeffery A. Medows, P.E. 29477

CM Archer Group, P.C. dba:

ARCHER-ELGIN
ENGINEERING | SURVEYING | ARCHITECTURE

Corporate Authority:
CM Archer Group, P.C.; E: 2003023612-D, LS: 2004017577-D, A-2016017179
310 East 6th Street, Rolla, Missouri 65401 ■ Phone: 573-364-4582 Fax: 573-364-4762 ■ www.archer-elgin.com

OFFICE OF ADMINISTRATION
DIVISION OF FACILITIES MANAGEMENT,
DESIGN AND CONSTRUCTION

STATE OF MISSOURI
DIVISION OF STATE PARKS
MISSOURI DEPARTMENT OF NATURAL RESOURCES

BENNETT SPRING STATE PARK WATER DISTRIBUTION SYSTEM & LAGOON PUMP STATION IMPROVEMENTS

LEBANON, MISSOURI

PROJECT # X2506.01
SITE # 4301
FACILITY # 53775

REVISION:
DATE:
REVISION:
DATE:
REVISION:
DATE:
ISSUE DATE: 3-19-26

CAD DWG FILE: W-202.DWG
DRAWN BY: JSM
CHECKED BY: JAM
DESIGNED BY: CCH

SHEET TITLE:

ENLARGED WATER PLAN ALTERNATE 1

SHEET NUMBER:

W-202

11 OF 18 SHEETS
3-19-26



STATE OF MISSOURI
MIKE KEHOE,
GOVERNOR

REGISTERED PROFESSIONAL ENGINEER
STATE OF MISSOURI
JEFFERY A. MEDOWS
NUMBER 29477
03/19/26

Jeffery A. Medows, P.E. 29477

CM Archer Group, P.C. dba:

ARCHER-ELGIN
ENGINEERING | SURVEYING | ARCHITECTURE

Corporate Authority:
CM Archer Group, P.C.; E: 2003023912-D, LS: 2004017577-D, A-2016017179
310 East 6th Street, Rolla, Missouri 65401 ■ Phone: 573-364-4582 Fax: 573-364-4762 ■ www.archer-elgin.com

OFFICE OF ADMINISTRATION
DIVISION OF FACILITIES MANAGEMENT, DESIGN AND CONSTRUCTION

STATE OF MISSOURI
DIVISION OF STATE PARKS
MISSOURI DEPARTMENT OF NATURAL RESOURCES

BENNETT SPRING STATE PARK
WATER DISTRIBUTION SYSTEM & LAGOON PUMP STATION IMPROVEMENTS

LEBANON, MISSOURI

PROJECT # X2506.01
SITE # 4301
FACILITY # 53775

REVISION:
DATE:
REVISION:
DATE:
REVISION:
DATE:
ISSUE DATE: 3-19-26

CAD DWG FILE: W-203.DWG
DRAWN BY: JSM
CHECKED BY: JAM
DESIGNED BY: CCH

SHEET TITLE:

ENLARGED WATER PLAN ALTERNATE 1

SHEET NUMBER:

W-203

12 OF 18 SHEETS
3-19-26

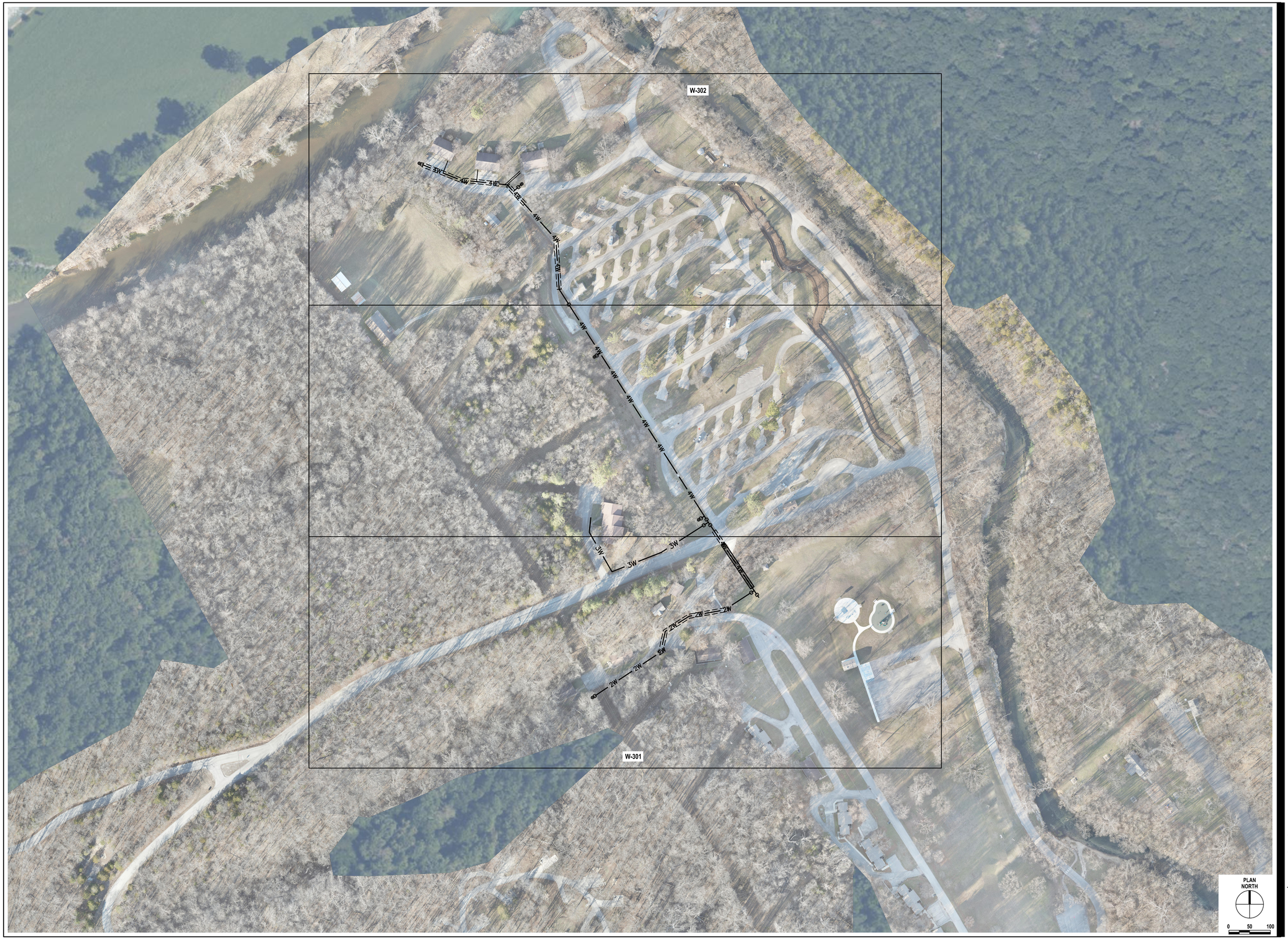

STATE OF MISSOURI
MIKE KEHOE, GOVERNOR

STATE OF MISSOURI
JEFFERY A. MEDOWS
NUMBER 29477
REGISTERED PROFESSIONAL ENGINEER
03/19/26

Jeffery A. Medows, P.E. 29477

CM Archer Group, P.C. dba:

ARCHER-ELGIN
ENGINEERING | SURVEYING | ARCHITECTURE

Corporate Authority:
CM Archer Group, P.C.; E: 2003023912-D; LS: 2004017577-D; A-2016017179
310 East 6th Street, Rolla, Missouri 65401 ● Phone: 573-364-4582 Fax: 573-364-4762 ● www.archer-elgin.com

OFFICE OF ADMINISTRATION
DIVISION OF FACILITIES MANAGEMENT, DESIGN AND CONSTRUCTION

STATE OF MISSOURI
DIVISION OF STATE PARKS
MISSOURI DEPARTMENT OF NATURAL RESOURCES

BENNETT SPRING STATE PARK
WATER DISTRIBUTION SYSTEM & LAGOON PUMP STATION IMPROVEMENTS

LEBANON, MISSOURI

PROJECT # X2506.01
SITE # 4301
FACILITY # 53775

REVISION:
DATE:
REVISION:
DATE:
REVISION:
DATE:
ISSUE DATE: 3-19-26

CAD DWG FILE: W-300.DWG
DRAWN BY: JSM
CHECKED BY: JAM
DESIGNED BY: CCH

SHEET TITLE:

WATER PLAN AND KEY SHEET ALTERNATE 2

SHEET NUMBER:

W-300

13 OF 18 SHEETS
3-19-26



STATE OF MISSOURI
MIKE KEHOE,
GOVERNOR

STATE OF MISSOURI
JEFFERY A. MEDOWS
NUMBER E-29477
REGISTERED PROFESSIONAL ENGINEER
03/19/26

Jeffery A. Medows, P.E. 29477

CM Archer Group, P.C. dba:

ARCHER-ELGIN
ENGINEERING | SURVEYING | ARCHITECTURE

Corporate Authority:
CM Archer Group, P.C.; E: 2003023912-D, LS: 2004017577-D, A-2016017179
310 East 6th Street, Rolla, Missouri 65401 ■ Phone: 573-364-4582 Fax: 573-364-4762 ■ www.archer-elgin.com

OFFICE OF ADMINISTRATION
DIVISION OF FACILITIES MANAGEMENT,
DESIGN AND CONSTRUCTION

STATE OF MISSOURI
DIVISION OF STATE PARKS
MISSOURI DEPARTMENT OF NATURAL RESOURCES

BENNETT SPRING STATE PARK
WATER DISTRIBUTION SYSTEM
& LAGOON PUMP STATION
IMPROVEMENTS

LEBANON, MISSOURI

PROJECT # X2506.01
SITE # 4301
FACILITY # 53775

REVISION:
DATE:
REVISION:
DATE:
REVISION:
DATE:
ISSUE DATE: 3-19-26

CAD DWG FILE: W-301.DWG
DRAWN BY: JSM
CHECKED BY: JAM
DESIGNED BY: CCH

SHEET TITLE:

ENLARGED
WATER PLAN
ALTERNATE 2

SHEET NUMBER:

W-301

14 OF 18 SHEETS
3-19-26



STATE OF MISSOURI
MIKE KEHOE,
GOVERNOR

STATE OF MISSOURI
JEFFERY A. MEDOWS
NUMBER E-29477
REGISTERED PROFESSIONAL ENGINEER
Jeffery A. Medows, P.E. 29477

CM Archer Group, P.C. dba:
ARCHER-ELGIN
ENGINEERING | SURVEYING | ARCHITECTURE
Corporate Authority:
CM Archer Group, P.C.; E: 2004017577-D, A-2016017179
310 East elm Street, Rolla, Missouri 65401 ■ Phone: 573-364-4582 Fax: 573-364-4762 ■ www.archer-elgin.com

OFFICE OF ADMINISTRATION
DIVISION OF FACILITIES MANAGEMENT,
DESIGN AND CONSTRUCTION

STATE OF MISSOURI
DIVISION OF STATE PARKS
MISSOURI DEPARTMENT OF NATURAL RESOURCES

BENNETT SPRING STATE PARK
WATER DISTRIBUTION SYSTEM
& LAGOON PUMP STATION
IMPROVEMENTS

LEBANON, MISSOURI

PROJECT # X2506.01
SITE # 4301
FACILITY # 53775

REVISION:
DATE:
REVISION:
DATE:
REVISION:
DATE:
ISSUE DATE: 3-19-26

CAD DWG FILE: W-302.DWG
DRAWN BY: JSM
CHECKED BY: JAM
DESIGNED BY: CCH

SHEET TITLE:
ENLARGED WATER PLAN ALTERNATE 2

SHEET NUMBER:
W-302
15 OF 18 SHEETS
3-19-26

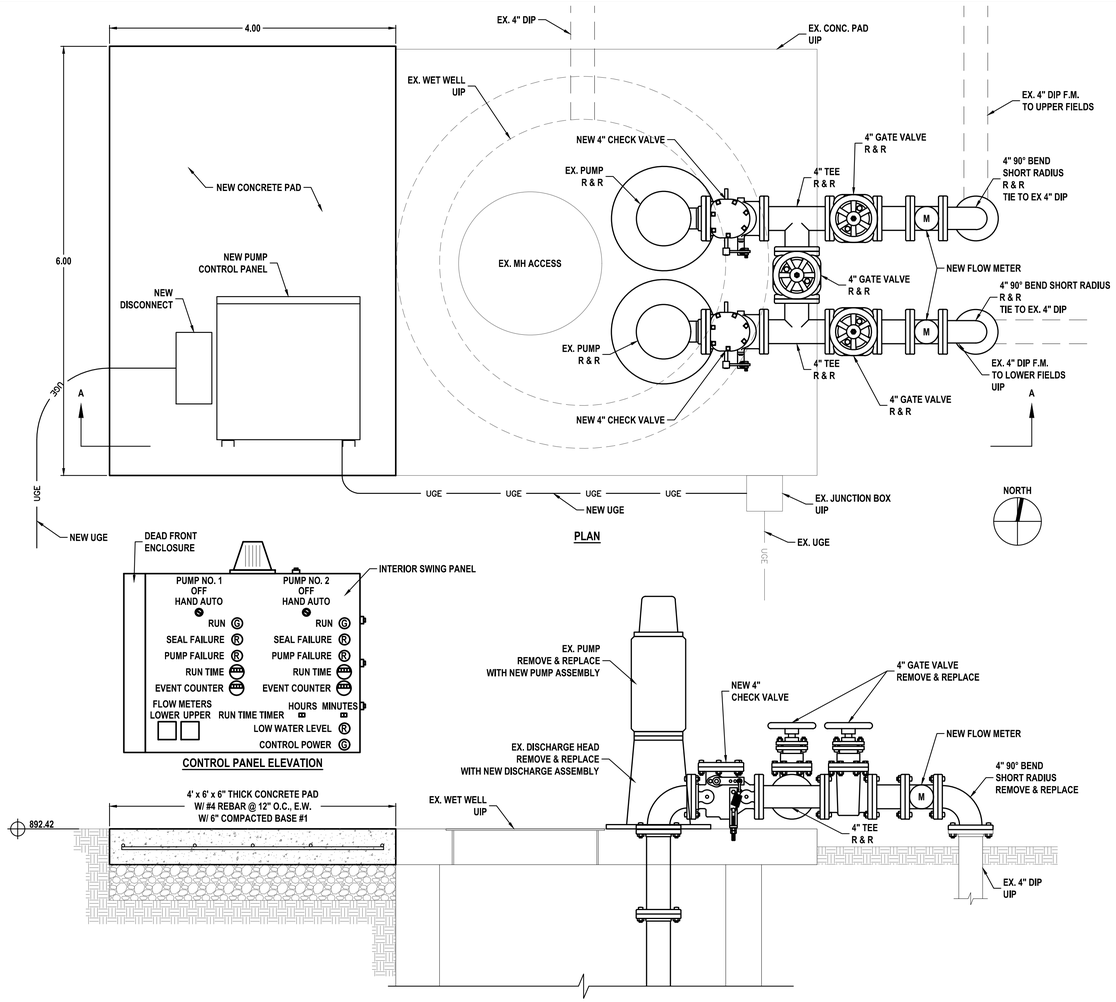

WET WELL PLAN & SECTION

SCALE: 1" = 1'-0"

SEWER UTILITY NOTES:

1. ALL EXISTING UTILITIES LOCATIONS SHOWN ON THE PLANS ARE TO BE CONSIDERED APPROXIMATE. THE CONTRACTOR SHALL MAKE ALL REASONABLE EFFORTS TO LOCATE ALL EXISTING UTILITIES IMPACTED BY CONSTRUCTION PRIOR TO THE COMMENCEMENT OF ANY CONSTRUCTION ACTIVITY. ENGINEER IS TO BE NOTIFIED IMMEDIATELY IF ANY DISCREPANCIES ARE DISCOVERED AT ANYTIME THROUGHOUT THE PROJECT, REGARDING THE LOCATION AND DISPOSITION OF THE EXISTING UTILITIES. THE CONTRACTOR SHALL LIMIT ADJUSTMENTS OF ORIGINAL DESIGN UNLESS FORMAL APPROVAL IS PROVIDED. CHANGES TO CONTRACT DOCUMENTS MUST BE FORMALLY APPROVED PRIOR TO THE COMMENCEMENT OF CONSTRUCTION.
2. PROVIDE CONNECTION TO ALL EXISTING SEWER FACILITIES MAINTAINED IN-PLACE THROUGH PROJECT. CONNECTIONS NOT EXPLICITLY SHOWN ON THESE PLANS SHALL BE CONSIDERED INCIDENTAL TO THE SCOPE AND INCLUDED IN THE PROJECT.
3. PROVIDE CONNECTION TO ALL EXISTING SEWER FACILITIES MAINTAINED IN-PLACE THROUGH PROJECT. CONNECTIONS NOT EXPLICITLY SHOWN ON THESE PLANS SHALL BE CONSIDERED INCIDENTAL TO THE SCOPE AND INCLUDED IN THE PROJECT.
4. DO NOT OBSTRUCT ROADWAYS DURING CONSTRUCTION OF IMPROVEMENTS. ROADWAYS ARE TO REMAIN OPEN AT ALL TIMES.
5. PRIOR TO DIGGING CALL 811 (DIGRITE).
6. BASE AGGREGATE #1 SHALL BE 1" MINUS CRUSHED LIMESTONE WITH THE FOLLOWING GRADATION REQUIREMENTS:

PASSING	1 INCH SIEVE	100%
PASSING	1/2 INCH SIEVE	60 - 90%
PASSING	NO. 4 SIEVE	40 - 60%
PASSING	NO. 40 SIEVE	15 - 35%

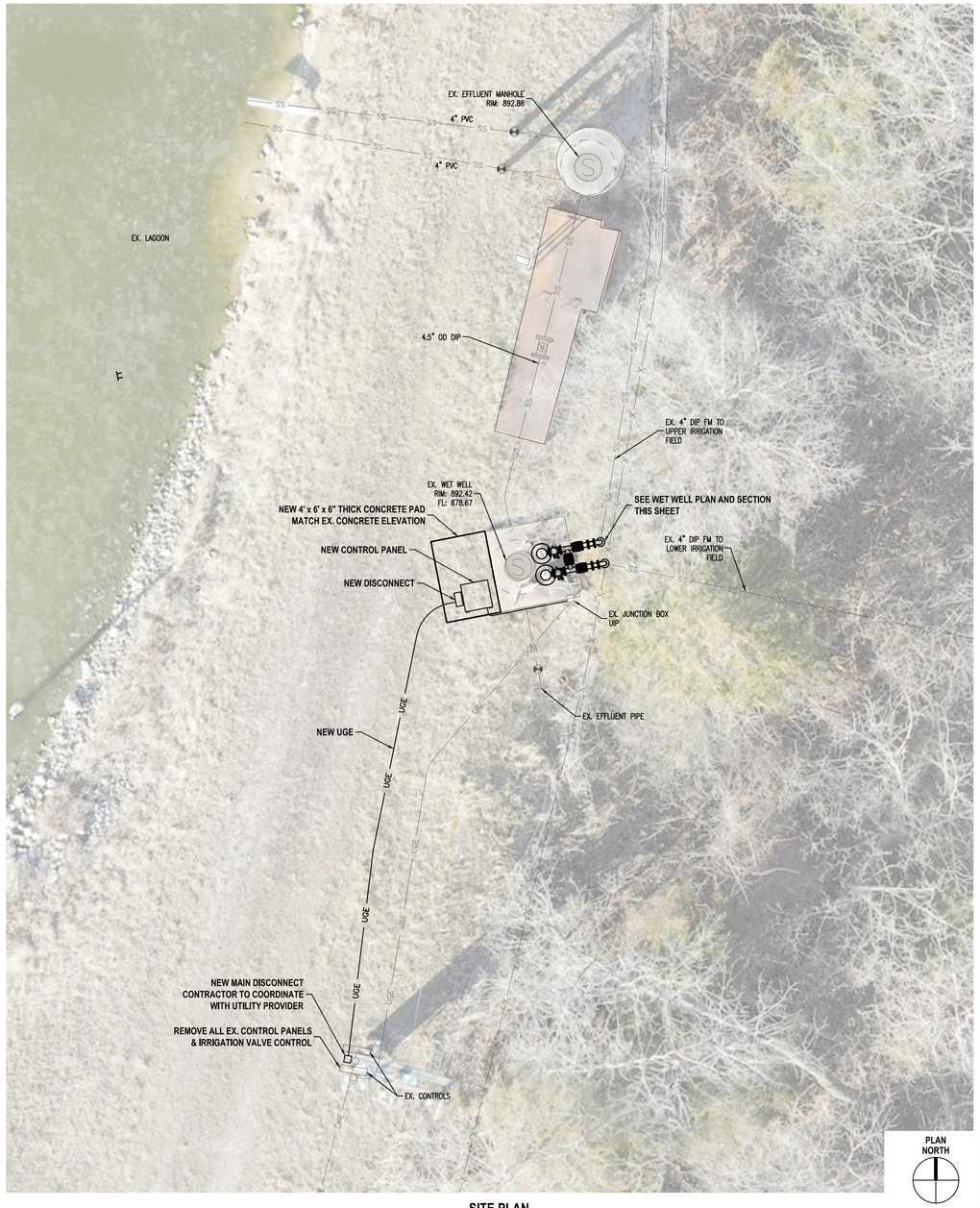

SITE PLAN

SCALE: 1" = 5'

STATE OF MISSOURI
MIKE KEHOE, GOVERNOR

STATE OF MISSOURI
JEFFERY A. MEDOWS
NUMBER E-29477
REGISTERED PROFESSIONAL ENGINEER
07/31/26

Jeffery A. Medows, P.E. 29477

CM Archer Group, P.C. dba:
ARCHER-ELGIN
ENGINEERING | SURVEYING | ARCHITECTURE
Corporate Authority:
CM Archer Group, P.C.; E: 2003023612-D; LS: 2004017577-D, A-2016017179
310 East 6th Street, Rolla, Missouri 65401 ■ Phone: 573-364-4582 Fax: 573-364-4762 ■ www.archer-elgin.com

OFFICE OF ADMINISTRATION
DIVISION OF FACILITIES MANAGEMENT,
DESIGN AND CONSTRUCTION

STATE OF MISSOURI
DIVISION OF STATE PARKS
MISSOURI DEPARTMENT OF NATURAL RESOURCES

BENNETT SPRING STATE PARK
WATER DISTRIBUTION SYSTEM
& LAGOON PUMP STATION
IMPROVEMENTS

LEBANON, MISSOURI

PROJECT # X2506.01
SITE # 4301
FACILITY # 53775

REVISION:
DATE:
REVISION:
DATE:
REVISION:
DATE:
ISSUE DATE: 3-19-26

CAD DWG FILE: W-401.DWG
DRAWN BY: JSM
CHECKED BY: JAM
DESIGNED BY: JGH

SHEET TITLE:

LAGOON PUMP IMPROVEMENT PLAN BASE BID

SHEET NUMBER:

W-401

16 OF 18 SHEETS
3-19-26

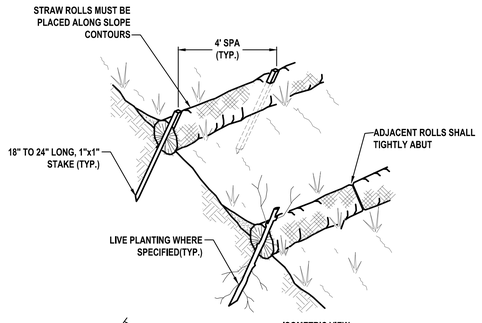

ISOMETRIC VIEW

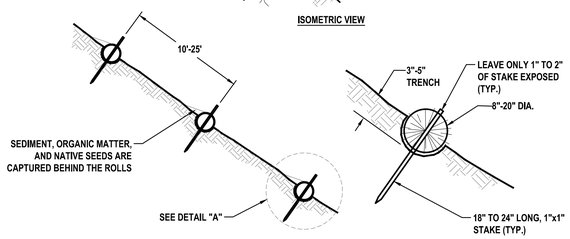

TYPICAL SECTION

DETAIL "A"

NOTE:

1. STRAW ROLL INSTALLATION REQUIRES THE PLACEMENT AND SECURE STAKING OF THE ROLL IN A TRENCH, 3"-5" DEEP, DUG ON CONTOUR. RUNOFF MUST NOT BE ALLOWED TO RUN UNDER OR AROUND ROLL.
2. SPACING SHALL DEPEND ON SOIL TYPE AND SLOPE GRADE.
3. WATTLES AT THE TOE OF SLOPES GREATER THAN 5:1 (H:V) MAY REQUIRE THE USE OF 20-INCH DIAMETER UNITS OR INSTALLATION ACHIEVING THE SAME PROTECTION (E.G., STACKED SMALLER DIAMETER STRAW WATTLES, ETC).

STRAW WATTLE DETAIL

NOT TO SCALE

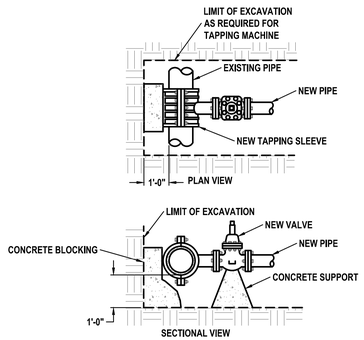

TAPPIING SLEEVE AND VALVE INSTALLATION DETAIL

NOT TO SCALE

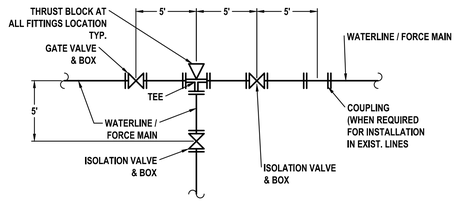

LINE SCHEMATIC

SEE PLAN SHEETS FOR REQUIRED FITTING TYPES AND VALVE INSTALLATIONS FOR SPECIFIC CONNECTIONS, BRANCHES AND CONNECTIONS TO EXISTING SYSTEMS. NOT ALL FITTINGS AND/OR VALVES SHOWN IN THE SCHEMATIC MAY BE REQUIRED AT ALL LOCATIONS.

TYPICAL VALVE / FITTING LOCATION DETAIL

NOT TO SCALE

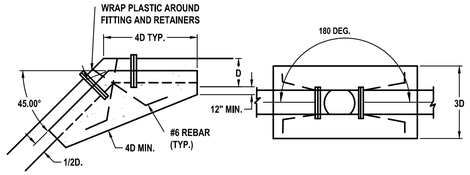

NOTE: THREADED FITTINGS AT ALL VERTICAL BENDS.

VERTICAL BEND THRUST BLOCK

NOT TO SCALE

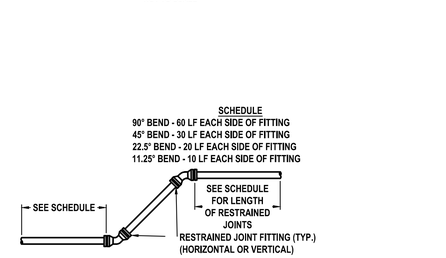

TYPICAL RESTRAINED JOINT PIPE SCHEDULE DETAIL

NOT TO SCALE

VERTICAL BEND DETAIL

NOT TO SCALE

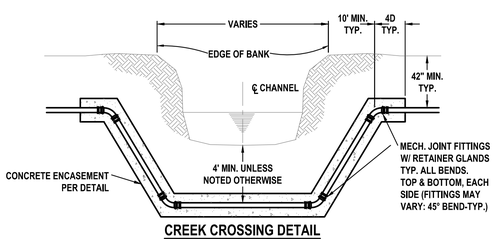

CREEK CROSSING DETAIL

NOT TO SCALE

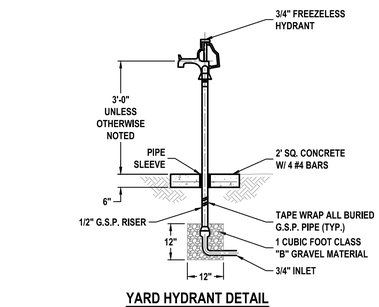

YARD HYDRANT DETAIL

NOT TO SCALE

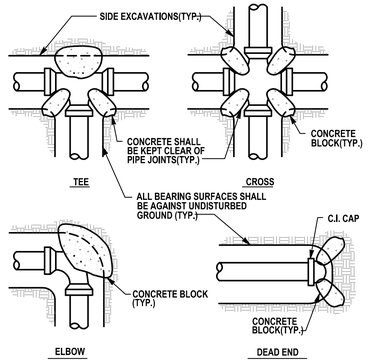

BEARING AREAS EACH DIRECTION OF THRUST IN SQUARE FEET				
PIPE SIZE	TEES & DEADENDS	90° ELBOWS	45° ELBOW CROSSES IN DIRECTION OF FLOW	22-1/2° ELBOWS
6"	4.0	5.5	3.0	2.0
8"	7.0	9.5	5.0	3.0
10"	9.5	13.5	7.0	4.0
12"	13.5	19.0	10.0	5.0
14"	18.0	23.5	14.0	7.0
16"	23.0	33.0	18.0	9.0

THRUST BLOCK INSTALLATION DETAIL

NOT TO SCALE

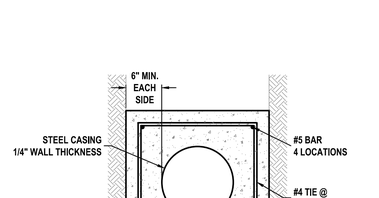

NOTE:
1. BLOCK UP PIPE TO PROVIDE MINIMUM CLEARANCE INDICATED.
2. INSTALL TIE DOWNS TO PREVENT FLOATING.
3. CONCRETE ENCASEMENT SHALL EXTEND A MIN. OF 1 FOOT PAST STRUCTURE EDGE.

CONCRETE ENCASEMENT DETAIL

NOT TO SCALE

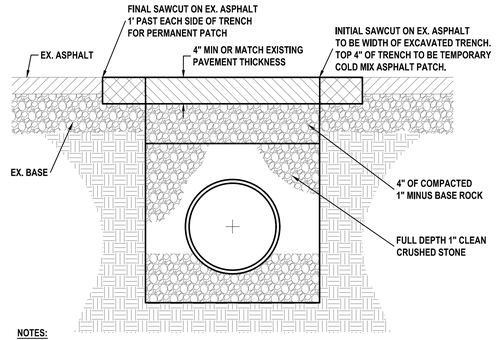

NOTES:

24 HOUR NOTICE TO PUBLIC WORKS DEPARTMENT IS REQUIRED BEFORE DIGGING IN THE RIGHT OF WAY.

BP1 ASPHALTIC CONCRETE SHALL BE COMPACTED IN PLACE IN MAXIMUM LIFTS OF 3 INCHES.

ASPHALT STREET PATCH DETAIL

NOT TO SCALE

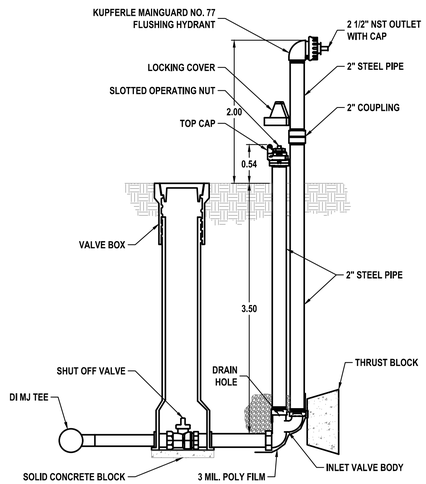

MAINGUARD #77 BLOW-OFF HYDRANT SHALL BE SELF-DRAINING, NON-FREEZING TYPE WITH A 42" DEPTH OF BURY. HYDRANT SHALL BE FURNISHED WITH A 2" FIP HORIZONTAL SIDE INLET CONNECTION, A NON-TURNING OPERATING ROD AND SHALL OPEN TO THE LEFT. OUTLET SHALL BE 2-1/2" NST OR SMALLER WITH CAP AND EXTEND A MINIMUM OF 12" ABOVE THE GROUND.
ALL WATER FLOW SHALL PASS THRU A 2" STEEL PIPE AND WATERWAY. THE OPERATING DRIVE MECHANISM SHALL RAISE AND LOWER A PLUNGER TO CONTROL THE FLOW OF WATER AND SHALL BE SERVICEABLE FROM ABOVE GROUND WITH NO DIGGING. WITH ALL WORKING PARTS BEING BRASS, GALVANIZED STEEL, OR PVC. SAID OPERATING DRIVE SHALL OPERATE WITH A STANDARD UNIVERSAL SLOTTED VALVE WRENCH. WHEN OPEN THE FLOW OF WATER SHALL BE UNOBSTRUCTED AND THE DRAIN HOLE SHALL BE COVERED.
HYDRANT SHALL BE SET IN 4 CUBIC FEET OF CRUSHED STONE TO ALLOW FOR PROPER DRAINAGE OF HYDRANT. RECOMMENDATION OF THE AWWA SHOULD BE FOLLOWED WHEN INSTALLING THE HYDRANT.

FLUSH HYDRANT DETAIL

NOT TO SCALE

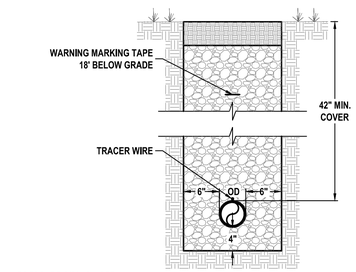

PRESSURE PIPING NOTE:

1. NO BEDDING REQUIRED FOR HDPE IN SUITABLE SOILS.
2. SUITABLE SOILS ARE MATERIALS FREE OF ROCKS OR FOREIGN MATERIALS GREATER THAN 1-1/2"Ø.

OUT OF TRAFFIC PIPE INSTALLATION DETAIL

NOT TO SCALE

STATE OF MISSOURI
MIKE KEHOE, GOVERNOR

STATE OF MISSOURI — JEFFERY A. MEDOWS — NUMBER E-29477 — REGISTERED PROFESSIONAL ENGINEER — 09/19/25

Jeffery A. Medows, P.E. 29477

CM Archer Group, P.C. dba:
ARCHER-ELGIN
ENGINEERING | SURVEYING | ARCHITECTURE
CM Archer Group, P.C.; E: 2003023912-D, LS: 2004017577-D, A-2016017179
310 East 6th Street, Rolla, Missouri 65401 ■ Phone: 573-364-4582 Fax: 573-364-4582 ■ www.archer-elgin.com

OFFICE OF ADMINISTRATION
DIVISION OF FACILITIES MANAGEMENT, DESIGN AND CONSTRUCTION

STATE OF MISSOURI
DIVISION OF STATE PARKS
MISSOURI DEPARTMENT OF NATURAL RESOURCES

BENNETT SPRING STATE PARK
WATER DISTRIBUTION SYSTEM & LAGOON PUMP STATION IMPROVEMENTS

LEBANON, MISSOURI

PROJECT # X2506.01
SITE # 4301
FACILITY # 53775

REVISION:
DATE:
REVISION:
DATE:
REVISION:
DATE:
ISSUE DATE: 3-19-26

CAD DWG FILE: W-501.DWG
DRAWN BY: JSM
CHECKED BY: JAM
DESIGNED BY: CCH

SHEET TITLE:
DETAILS

SHEET NUMBER:
W-501

17 OF 18 SHEETS
2-19-26

NOMINAL DIAMETER DI / PVC (INCHES)	MINIMUM RESTRAINT LENGTH (FEET)
4	140
6	180
8	200
10	240
12	260
16	320
20	380
24	440

MINIMUM RESTRAINT LENGTH OF DI / PVC PIPE

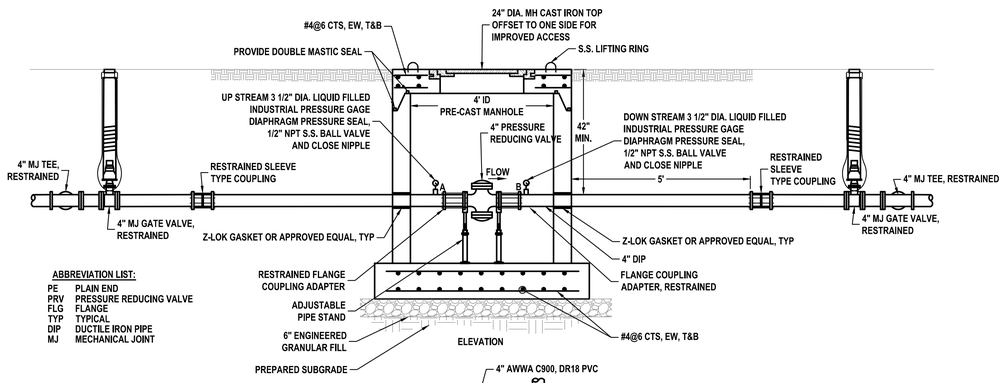

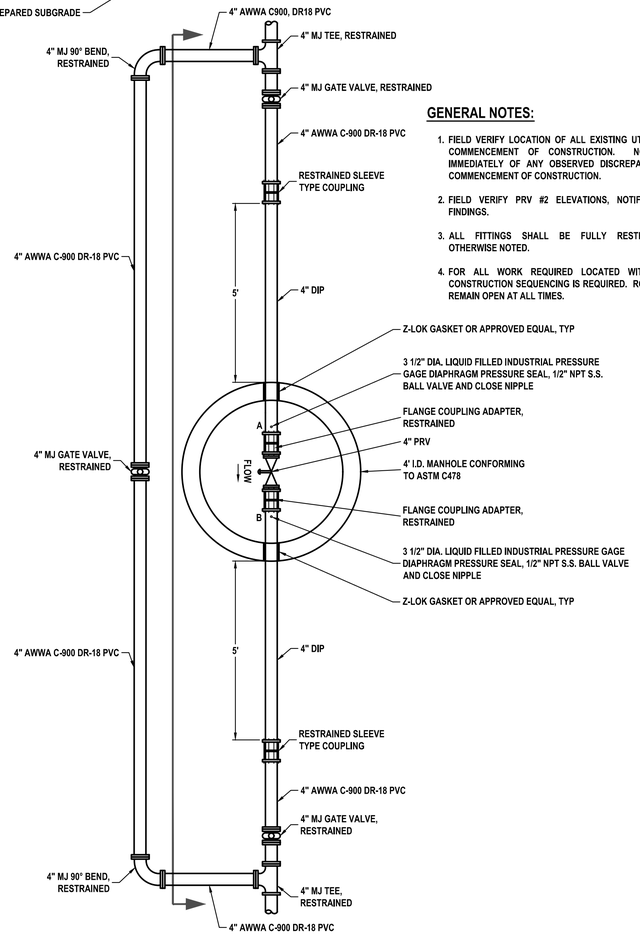

PRESSURE REDUCING VALVE & VAULT DETAIL

NOT TO SCALE

GENERAL NOTES:

1. FIELD VERIFY LOCATION OF ALL EXISTING UTILITIES PRIOR TO COMMENCEMENT OF CONSTRUCTION. NOTIFY ENGINEER IMMEDIATELY OF ANY OBSERVED DISCREPANCIES PRIOR TO COMMENCEMENT OF CONSTRUCTION.
2. FIELD VERIFY PRV #2 ELEVATIONS, NOTIFY ENGINEER OF FINDINGS.
3. ALL FITTINGS SHALL BE FULLY RESTRAINED, UNLESS OTHERWISE NOTED.
4. FOR ALL WORK REQUIRED LOCATED WITHIN ROADWAYS, CONSTRUCTION SEQUENCING IS REQUIRED. ROADWAYS ARE TO REMAIN OPEN AT ALL TIMES.

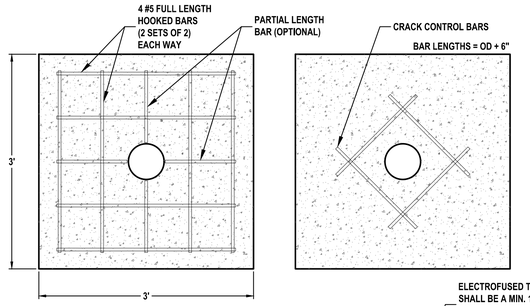

HDPE CONCRETE ANCHOR DETAIL

NOT TO SCALE

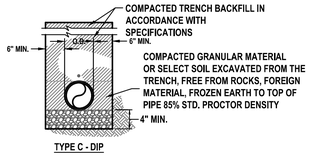

TYPE C - DIP

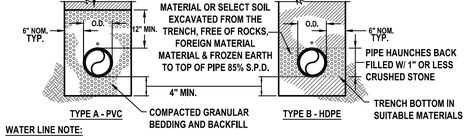

TYPE A - PVC TYPE B - HDPE

WATER LINE NOTE:

1. SUITABLE SOILS ARE MATERIALS FREE OF ROCKS OR FOREIGN MATERIALS GREATER THAN 1-1/2"Ø.
2. PLACE TRACER WIRE ALONG TOP OF ALL FORCE MAIN PIPING.
3. INSTALL UNDER GROUND WARNING MARKING TAPE INSTALL 18" BELOW FINISHED GRADE.

OUT OF TRAFFIC PIPE INSTALLATION DETAIL

NOT TO SCALE

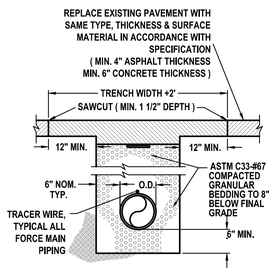

PAVEMENT RESTORATION DETAIL

NOT TO SCALE

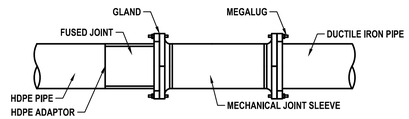

NOTES:
1. ALL HARDWARE SHALL BE STAINLESS STEEL.
2. USE MANUFACTURER'S RECOMMENDED BOLTING PROCEDURES.

SOLID DI SLEEVE CONNECTION TO HDPE PIPE DETAIL

NOT TO SCALE

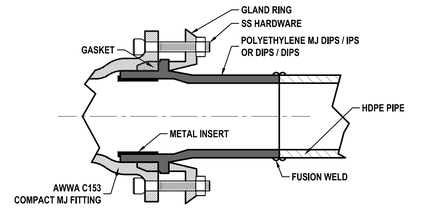

NOTES:
1. THIS DETAIL IS USED WHEN CONNECTING HDPE PIPE TO AN MJ VALVE OR FITTING. MJ ADAPTERS DO NOT REQUIRE THE USE OF INSERT STIFFENERS, AND SHALL NOT BE INSTALLED WITHIN A BENT SECTION OF HDPE PIPE.
2. WHEN TRANSITIONING FROM HDPE TO NON-HDPE PIPE, IT IS PREFERRED TO USE AN MJ VALVE AT THE PIPE TRANSITION, WHICH ALLOWS HDPE PIPE TO BE HYDROSTATICALLY PRESSURE TESTED SEPARATELY FROM NON-HDPE PIPE. WHEN A VALVE IS NOT USED, AN MJ FITTING (SUCH AS AN MJ DI SLEEVE, REDUCER OR BEND) SHALL BE USED.
3. AN APPROVED WEDGE-ACTION RESTRAINT DEVICE, SHALL BE USED TO RESTRAIN NON-HDPE PIPE TO AN MJ VALVE OR FITTING.
4. IF CONNECTING NEW HDPE TO EXISTING UNRESTRAINED DIP OR PVC, A CONCRETE IN-LINE ANCHOR SHOULD BE USED AS SHOWN IN THE PLANS. SEE DETAIL"CONCRETE IN-LINE ANCHOR FOR POLYETHYENE (HDPE) PIPE".

MJ CONNECTION TO FITTING DETAIL

NOT TO SCALE

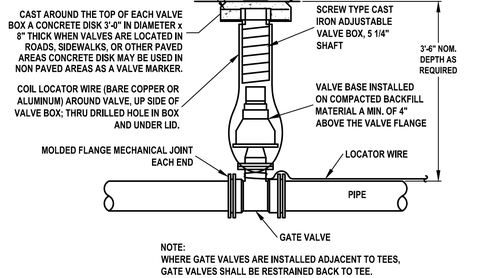

NOTE:
WHERE GATE VALVES ARE INSTALLED ADJACENT TO TEES, GATE VALVES SHALL BE RESTRAINED BACK TO TEE.

GATE VALVE DETAIL

NOT TO SCALE

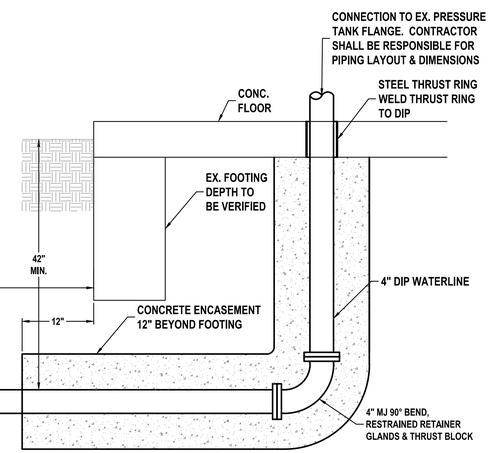

BUILDING PENETRATION DETAIL

NOT TO SCALE

STATE OF MISSOURI
MIKE KEHOE,
GOVERNOR

STATE OF MISSOURI JEFFERY A. MEDOWS NUMBER E-29417 REGISTERED PROFESSIONAL ENGINEER
05/19/26
Jeffery A. Medows, P.E. 29477

CM Archer Group, P.C. dba:
ARCHER-ELGIN
ENGINEERING | SURVEYING | ARCHITECTURE
Corporate Authority:
CM Archer Group, P.C.; I.E. 2003023912-D, LS: 2004017577-D, A-2016017179
310 East 6th Street, Rolla, Missouri 65401 ● Phone: 573-364-4582 Fax: 573-364-4582 ● www.archer-elgin.com

OFFICE OF ADMINISTRATION
DIVISION OF FACILITIES MANAGEMENT,
DESIGN AND CONSTRUCTION

STATE OF MISSOURI
DIVISION OF STATE PARKS
MISSOURI DEPARTMENT OF NATURAL RESOURCES

BENNETT SPRING STATE PARK
WATER DISTRIBUTION SYSTEM & LAGOON PUMP STATION IMPROVEMENTS

LEBANON, MISSOURI

PROJECT # X2506.01
SITE # 4301
FACILITY # 53775

REVISION:
DATE:
REVISION:
DATE:
REVISION:
DATE:

ISSUE DATE: 3-19-26

CAD DWG FILE: W-502.DWG
DRAWN BY: JSM
CHECKED BY: JAM
DESIGNED BY: CCH

SHEET TITLE:
DETAILS

SHEET NUMBER:
W-502

18 OF 18 SHEETS
3-19-26